Appendix E-1

Calibration Documents

CERTIFICATE OF CALIBRATION

CAL# 17839
Prev.

health physics instruments
330 D South Kellogg Ave, Goleta, CA 93117 Tel 805.967.8422 Fax 805.964.3162 Division of Far West Technology, Inc. www.fwt.com

Instrument Owned By:	Roger & Associate
Description:	Survey Meter
Equipment No.:	
Manufacturer:	Ludlum
Model:	3
Serial Number:	51256
Batteries:	2 ea D cell
Radiation Detected:	Gamma, Beta, Alpha
Probe Type, SN:	Pancake, 042780
Received Condition:	Good
Procedure Used:	HPI-CAL-14A
Calibration Date:	10/11/13
Date Due:	10/11/14

Source	Standard Description			Due Date
CS2	CS137		mR/h@1m	8/27
CS1	CS137		mR/h@1m	8/27
CS1-1	CS137		mR/h@1m	8/27
CS1-2	CS137		mR/h@1m	8/27
CS1-3	CS137	189.0	mR/h@1m	8/27
S	Ra226	2.095	mR/h@1m	8/27
W	Ra226	0.138	mR/h@1m	8/27
N1	Cf252		mrem/h@1m	Assay 1/91
N3	Cf252		mrem/h@1m	Assay 4/08
Pulser	Model MP2	SN001		7/14

Environmental	
Temperature:	24 Deg C
Barometer:	762 mmHg
Humidity:	47 %

CALIBRATION RESULTS

Efficiency: Sr90 23.1 %

Efficiency: Tc99 17.3 %

Source	Distance	Exposure	Scale Readings (cpm)					
	cm	mR/h	X100	X10	X1	X0.1		
CS1-3	112.2	150	160,000					
	194.4	50	80,000					
S	37.4	15		32,000				
	64.7	5		12,000				
	118.2	1.5			3,400			
	204.7	0.5			1,100			
W	95.9	0.15				360		
	166.1	0.05				150		

Comments, Repairs, and Adjustments:

☒ Instrument OK

CPM ranges set electronically. Background subtracted from all readings. ( ) indicates reading as found. Gamma calibrations from the side of all [redacted] ustomer.

[redacted] DATE 10/21/13

CERTIFICATE OF CALIBRATION

CAL# 17838
Prev. 10436

health physics instruments
330 D South Kellogg Ave, Goleta, CA 93117 Tel 805.967.8422 Fax 805.964.3162 Division of Far West Technology, Inc. www.fwt.com

Instrument Owned By:	Rogers & Associates
Description:	Survey Meter
Equipment No.:	
Manufacturer:	Ludlum
Model:	3
Serial Number	80145
Batteries:	2 ea D cell
Radiation Detected:	Gamma,
Probe Type, SN:	Scint, 44-2, 089189
Received Condition:	Detector broken
Procedure Used:	HPI-CAL-14A
Calibration Date:	11/7/13
Date Due:	11/7/14

Source	Standard Description			Due Date
CS2	CS137		mR/h@1m	8/27
CS1	CS137		mR/h@1m	8/27
CS1-1	CS137		mR/h@1m	8/27
CS1-2	CS137		mR/h@1m	8/27
CS1-3	CS137		mR/h@1m	8/27
S	Ra226	2.095	mR/h@1m	8/27
W	Ra226	0.138	mR/h@1m	8/27
N1	Cf252		mrem/h@1m	Assay 1/91
N3	Cf252		mrem/h@1m	Assay 4/08
Pulser	Model MP2	SN001		7/14

Environmental		
Temperature:	24	Deg C
Barometer:	764	mmHg
Humidity:	30	%

CALIBRATION RESULTS

Source	Distance	Exposure	Scale Readings (µR/h)					
	cm	µR/h	X100	X10	X1	X0.1		
S	102.4	2000	2,000					
	144.7	1000	1,000					
W	83.1	200		200				
	117.5	100		100				
	166.1	50		50				
	185.7	40		40				
	214.5	30		30				
	262.7	20			20			
	371.5	10			10			
	525.3	5			5			
		background			5	O/S		

Comments, Repairs, and Adjustments:

Replaced broken PMT in 1" Scintillator

[redacted] alibrations from the side of all
omer.
TE
11/8/13

CERTIFICATE OF CALIBRATION

CAL# 17853A
Prev. 17160A

health physics instruments
330 D South Kellogg Ave, Goleta, CA 93117 Tel 805.967.8422 Fax 805.964.3162 Division of Far West Technology, Inc. www.fwt.com

Instrument Owned By:	URS
Description:	Survey Meter
Equipment No.:	
Manufacturer:	Ludlum
Model:	12
Serial Number	102868
Batteries:	2 ea D cell
Radiation Detected:	Gamma, Beta
Probe Type, SN:	Scint, 44-2, 152398
Received Condition:	Good
Procedure Used:	HPI-CAL-14A
Calibration Date:	10/11/13
Date Due:	10/11/14

Source	Standard Description			Due Date
CS2	CS137		mR/h@1m	8/27
CS1	CS137		mR/h@1m	8/27
CS1-1	CS137		mR/h@1m	8/27
CS1-2	CS137		mR/h@1m	8/27
CS1-3	CS137		mR/h@1m	8/27
S	Ra226	2.095	mR/h@1m	8/27
W	Ra226	0.138	mR/h@1m	8/27
N1	Cf252		mrem/h@1m	Assay 1/91
N3	Cf252		mrem/h@1m	Assay 4/08
Pulser	Model MP2	SN001		6/12
	Environmental			
Temperature:	23 Deg C			
Barometer:	764 mmHg			
Humidity:	47 %			

CALIBRATION RESULTS

Source	Distance	Exposure	Scale Readings (CPM)					
	cm	mR/h	X1000	X100	X10	X1	1 Min Scaler	cpm/mR/h
W	30.3	1.5	240,000				246,370	164
	52.5	0.5	90,000				90,459	179
	95.9	0.15		32,000			31,995	208
	166.1	0.05		12,000			11,475	212
	303.3	0.015			4,800		4,080	214
	525.4	0.005			2,600		2,372	301
		Background			1,000	O/S	866	
		AM241			Yes	O/S		

High Voltage:

Comments, Repairs, and Adjustments:

☒ Instrument OK

CPM ranges set electronically. Background subtracted from all readings. ( ) indicates reading as found. Gamma calibrations from the side of all

[redacted]

21/13

CERTIFICATE OF CALIBRATION

CAL# 17853B
Prev. 17160B

health physics instruments
330 D South Kellogg Ave, Goleta, CA 93117 Tel 805.967.8422 Fax 805.964.3162 Division of Far West Technology, Inc. www.fwt.com

Instrument Owned By:	URS
Description:	Survey Meter
Equipment No.:	
Manufacturer:	Ludlum
Model:	12
Serial Number	102868
Batteries:	2 ea D cell
Radiation Detected:	Gamma, Beta
Probe Type, SN:	GM Pancake, 44-9, 015129
Received Condition:	Good
Procedure Used:	HPI-CAL-14A
Calibration Date:	10/11/13
Date Due:	10/11/14

Source	Standard Description			Due Date
CS2	CS137		mR/h@1m	8/27
CS1	CS137		mR/h@1m	8/27
CS1-1	CS137		mR/h@1m	8/27
CS1-2	CS137		mR/h@1m	8/27
CS1-3	CS137	189.0	mR/h@1m	8/27
S	Ra226	2.095	mR/h@1m	8/27
W	Ra226	0.138	mR/h@1m	8/27
N1	Cf252		mrem/h@1m	Assay 1/91
N3	Cf252		mrem/h@1m	Assay 4/08
Pulser	Model MP2	SN001		7/14

Environmental		
Temperature:	23	Deg C
Barometer:	764	mmHg
Humidity:	47	%

CALIBRATION RESULTS

Efficiency: Sr90 27.0 %

Efficiency: Tc99 16.2 %

Source	Distance	Exposure	Scale Readings (CPM)			
	cm	mR/h	X1000	X100	X10	X1
CS1-3	112.2	150	170,000			
	194.4	50	70,000			
S	37.4	15		34,000		
	64.7	5		11,000		
	118.2	1.5			3,300	
	204.7	0.5			1,000	
W	95.9	0.15				450
	166.1	0.05				200

Comments, Repairs, and Adjustments:

☒ Instrument OK CPM ranges set electronically. Background subtracted from all readings. ( ) indicates reading as found. Gamma calibrations from the side of all

[redacted]

1/13

Certificate of Calibration

Calibration and Efficiency Determination

Environmental Restoration Group, Inc.
8809 Washington St NE, Suite 150
Albuquerque, NM 87113
(505) 298-4224
www.ERGoffice.com

Meter: Manufacturer: Ludlum Model Number: 12 Serial Number: 229277

Detector: Manufacturer: Ludlum Model Number: 44-9 Serial Number: PR125462

☑ Mechanical Check ☑ THR/WIN Operation HV Check (+/- 2.5%): ☑ 500 V ☑ 1000 V ☑ 1500 V

☑ F/S Response Check ☑ Reset Check Cable Length: ☑ 39-inch ☐ 72-inch ☐ Other:

☑ Geotropism ☑ Audio Check

☑ Meter Zeroed ☑ Battery Check (Min 4.4 VDC) Barometric Pressure: 24.83 inches Hg

Source Distance: ☑ Contact ☐ 6 inches ☐ Other: Threshold: 40 mV Temperature: 74 °F

Source Geometry: ☐ Side ☑ Below ☐ Other: Window: Relative Humidity: 20 %

Instrument found within tolerance: ☑ Yes ☐ No

Range/Multiplier	Reference Setting	"As Found Reading"		Meter Reading		Integrated 1-Min. Count	Log Scale Count	
x 1000	400	400	kcpm	400	kcpm			kcpm
x 1000	100	100	kcpm	100	kcpm			kcpm
x 100	400	400	kcpm	400	kcpm			kcpm
x 100	100	100	kcpm	100	kcpm			kcpm
x 10	400	400	kcpm	400	kcpm			kcpm
x 10	100	100	kcpm	100	kcpm			kcpm
x 1	400	400	cpm	400	cpm			cpm
x 1	100	100	cpm	100	cpm			cpm

Gross Tc-99 counts (cpm): 2200 Gross Sr/Y-90 counts (cpm)

Background counts (cpm): 60 Background counts (cpm):

Net Tc-99 Counts (cpm): 2140 Net Sr/Y-90 counts (cpm):

Comments:

Reference Instruments and/or Sources:

Ludlum pulser serial number: ☐ 97743 ☑ 201932 Fluke multimeter serial number: ☐ 8749012

☐ Alpha Source: Th-230 @ 12,800 dpm (1/4/12) sn: 4098-03 ☐ Gamma Source Cs-137 @ 5.2 uCi (1/4/12) sn: 4097-03

☑ Beta Source: Tc-99 @ 17,700 dpm (1/4/12) sn: 4099-03 ☐ Other Source:

[redacted]

libration Date: 10-7-13 Calibration Due: 10-7-14

view Date: 10/07/13

This calibration conforms to the requirements and acceptable calibration conditions of ANSI N323A - 1997.

Certificate of Calibration

Calibration and Efficiency Determination

Environmental Restoration Group, Inc.
8809 Washington St NE, Suite 150
Albuquerque, NM 87113
(505) 298-4224
www.ERGoffice.com

Meter: Manufacturer: Ludlum Model Number: 12 Serial Number: 281910

Detector: Manufacturer: Ludlum Model Number: 44-9 Serial Number: PR308451

☑ Mechanical Check ☑ THR/WIN Operation HV Check (+/- 2.5%): ☑ 500 V ☑ 1000 V ☑ 1500 V

☑ F/S Response Check ☑ Reset Check Cable Length: ☑ 39-inch ☐ 72-inch ☐ Other:

☑ Geotropism ☑ Audio Check

☑ Meter Zeroed ☑ Battery Check (Min 4.4 VDC) Barometric Pressure: 24.54 inches Hg

Source Distance: ☑ Contact ☐ 6 inches ☐ Other: Threshold: 40 mV Temperature: 76 °F

Source Geometry: ☐ Side ☑ Below ☐ Other: Window: Relative Humidity: 20 %

Instrument found within tolerance: ☑ Yes ☐ No

Range/Multiplier	Reference Setting	"As Found Reading"		Meter Reading		Integrated 1-Min. Count	Log Scale Count
x 1000	400	400	kcpm	400	kcpm		kcpm
x 1000	100	100	kcpm	100	kcpm		kcpm
x 100	400	400	kcpm	400	kcpm		kcpm
x 100	100	100	kcpm	100	kcpm		kcpm
x 10	400	400	kcpm	400	kcpm		kcpm
x 10	100	100	kcpm	100	kcpm		kcpm
x 1	400	400	cpm	400	cpm		cpm
x 1	100	100	cpm	100	cpm		cpm

Gross Tc-99 counts (cpm): 2300 Gross Sr/Y-90 counts (cpm)

Background counts (cpm): 70 Background counts (cpm):

Net Tc-99 Counts (cpm): 2230 Net Sr/Y-90 counts (cpm):

Comments:

Reference Instruments and/or Sources:

Ludlum pulser serial number: ☐ 97743 ☑ 201932 Fluke multimeter serial number: ☐ 8749012

☐ Alpha Source: Th-230 @ 12,800 dpm (1/4/12) sn: 4098-03 ☐ Gamma Source Cs-137 @ 5.2 uCi (1/4/12) sn: 4097-03

☑ Beta Source: Tc-99 @ 17,700 dpm (1/4/12) sn: 4099-03 ☐ Other Source:

[redacted]

Calibration Date: 10-3-13 Calibration Due: 10-3-14

Review Date: 10/3/13

This calibration conforms to the requirements and acceptable calibration conditions of ANSI N323A - 1997.

Certificate of Calibration

Calibration and Efficiency Determination

Environmental Restoration Group, Inc.
8809 Washington St NE, Suite 150
Albuquerque, NM 87113
(505) 298-4224
www.ERGoffice.com

Meter: Manufacturer: Ludlum Model Number: 12 Serial Number: 281980

Detector: Manufacturer: Ludlum Model Number: 44-9 Serial Number: PR308445

- [x] Mechanical Check
- [x] F/S Response Check
- [x] Geotropism
- [x] Meter Zeroed
- [x] THR/WIN Operation
- [x] Reset Check
- [x] Audio Check
- [x] Battery Check (Min 4.4 VDC)

HV Check (+/- 2.5%): [x] 500 V [x] 1000 V [x] 1500 V

Cable Length: [x] 39-inch [ ] 72-inch [ ] Other:

Barometric Pressure: 24.54 inches Hg

Source Distance: [x] Contact [ ] 6 inches [ ] Other:

Threshold: 40 mV

Temperature: 75 °F

Source Geometry: [ ] Side [x] Below [ ] Other:

Window:

Relative Humidity: 20 %

Instrument found within tolerance: [x] Yes [ ] No

Range/Multiplier	Reference Setting	"As Found Reading"		Meter Reading		Integrated 1-Min. Count	Log Scale Count	
x 1000	400	400	kcpm	400	kcpm			kcpm
x 1000	100	100	kcpm	100	kcpm			kcpm
x 100	400	400	kcpm	400	kcpm			kcpm
x 100	100	100	kcpm	100	kcpm			kcpm
x 10	400	400	kcpm	400	kcpm			kcpm
x 10	100	100	kcpm	100	kcpm			kcpm
x 1	400	400	cpm	400	cpm			cpm
x 1	100	100	cpm	100	cpm			cpm

Gross Tc-99 counts (cpm): 2200

Background counts (cpm): 80

Net Tc-99 Counts (cpm): 2120

Gross Sr/Y-90 counts (cpm)

Background counts (cpm):

Net Sr/Y-90 counts (cpm):

Comments:

Reference Instruments and/or Sources:

Ludlum pulser serial number: [ ] 97743 [x] 201932

Fluke multimeter serial number: [ ] 8749012

[ ] Alpha Source: Th-230 @ 12,800 dpm (1/4/12) sn: 4098-03

[ ] Gamma Source Cs-137 @ 5.2 uCi (1/4/12) sn: 4097-03

[x] Beta Source: Tc-99 @ 17,700 dpm (1/4/12) sn: 4099-03

[ ] Other Source:

[redacted]

Calibration Date: 10-3-13

Calibration Due: 10-3-14

Review Date: 10/3/13

This calibration conforms to the requirements and acceptable calibration conditions of ANSI N323A - 1997.

Certificate of Calibration

Calibration and Voltage Plateau

Environmental Restoration Group, Inc.
8809 Washington St NE, Suite 150
Albuquerque, NM 87113
(505) 298-4224
www.ERGoffice.com

Meter:	Manufacturer:	Ludlum	Model Number:	2221r	Serial Number:	138368
Detector:	Manufacturer:	Ludlum	Model Number:	44-10	Serial Number:	PR154615

- ☑ Mechanical Check
- ☑ F/S Response Check
- ☑ Geotropism
- ☑ Meter Zeroed
- ☑ THR/WIN Operation
- ☑ Reset Check
- ☑ Audio Check
- ☑ Battery Check (Min 4.4 VDC)

HV Check (+/- 2.5%): ☑ 500 V ☑ 1000 V ☑ 1500 V

Cable Length: ☐ 39-inch ☑ 72-inch ☐ Other:

Source Distance: ☐ Contact ☑ 6 inches ☐ Other:

Source Geometry ☑ Side ☐ Below ☐ Other:

Threshold: 10 mV

Window:

Barometric Pressure: 24.57 inches Hg

Temperature: 78 °F

Relative Humidity: 20 %

Instrument found within tolerance: ☑ Yes ☐ No

Range/Multiplier	Reference Setting	"As Found Reading"	Meter Reading	Integrated 1-Min. Count	Log Scale Count
x 1000	400	400	400	399161	400
x 1000	100	100	100		100
x 100	40	400	400	39908	400
x 100	10	100	100		100
x 10	4	400	400	3990	400
x 10	1	100	100		100
x 1	400	400	400	399	400
x 1	100	100	100		100

High Voltage	Source Counts	Background
700	33661	
800	54613	
900	64603	
950	66928	
1000	69102	
1050	70648	
1100	71527	10262
1150	72196	
1200	72495	

Voltage Plateau

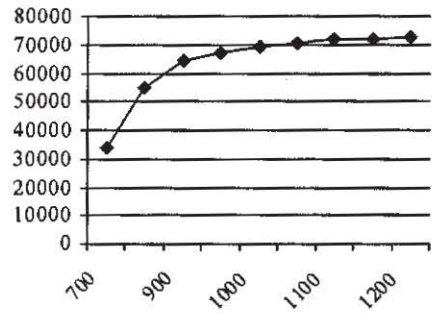

Comments: HV Plateau Scaler Count Time = 1-min. Recommended HV = 1100

Reference Instruments and/or Sources:

Ludlum pulser serial number: ☐ 97743 ☑ 201932

Fluke multimeter serial number: ☐ 8749012

☐ Alpha Source: Th-230 @ 12,800 dpm (1/4/12) sn: 4098-03

☑ Gamma Source Cs-137 @ 5.2 uCi (1/4/12) sn: 4097-03

☐ Beta Source: Tc-99 @ 17,700 dpm (1/4/12) sn: 4099-03

☐ Other Source:

[redacted]

Calibration Date: 6-11-14

Calibration Due 6-11-15

Date: 6/11/14

RG Form ITC. 101.A

This calibration conforms to the requirements and acceptable calibration conditions of ANSI N323A - 1997

Certificate of Calibration

Calibration and Voltage Plateau

Environmental Restoration Group, Inc.
8809 Washington St NE, Suite 150
Albuquerque, NM 87113
(505) 298-4224
www.ERGoffice.com

Meter:	Manufacturer:	Ludlum	Model Number:	2221r	Serial Number:	138377
Detector:	Manufacturer:	Ludlum	Model Number:	44-10	Serial Number:	PR198936

- ☑ Mechanical Check
- ☑ F/S Response Check
- ☑ Geotropism
- ☑ Meter Zeroed
- ☑ THR/WIN Operation
- ☑ Reset Check
- ☑ Audio Check
- ☑ Battery Check (Min 4.4 VDC)

HV Check (+/- 2.5%): ☑ 500 V ☑ 1000 V ☑ 1500 V

Cable Length: ☐ 39-inch ☐ 72-inch ☑ Other: 15'

Source Distance: ☐ Contact ☑ 6 inches ☐ Other:

Source Geometry: ☑ Side ☐ Below ☐ Other:

Threshold: 10 mV

Window:

Barometric Pressure: 24.83 inches Hg

Temperature: 76 °F

Relative Humidity: 20 %

Instrument found within tolerance: ☑ Yes ☐ No

Range/Multiplier	Reference Setting	"As Found Reading"	Meter Reading	Integrated 1-Min. Count	Log Scale Count
x 1000	400	400	400	400348	400
x 1000	100	100	100		100
x 100	40	400	400	40033	400
x 100	10	100	100		100
x 10	4	400	400	4006	400
x 10	1	100	100		100
x 1	400	400	400	401	400
x 1	100	100	100		100

High Voltage	Source Counts	Background
800	29594	
900	51389	
1000	64548	
1050	68015	
1100	69085	
1150	69785	11036
1200	71347	
1250	72028	

Voltage Plateau

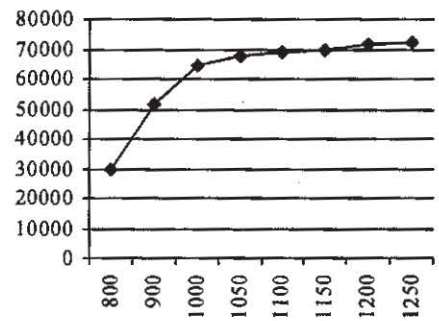

Comments: HV Plateau Scaler Count Time = 1-min. Recommended HV = 1150. 51045cpm with source 6" below shielded 44-10.

Reference Instruments and/or Sources:

Ludlum pulser serial number: ☐ 97743 ☑ 201932

Fluke multimeter serial number: ☐ 8749012

☐ Alpha Source: Th-230 @ 12,800 dpm (1/4/12) sn: 4098-03

☑ Gamma Source Cs-137 @ 5.2 uCi (1/4/12) sn: 4097-03

☐ Beta Source: Tc-99 @ 17,700 dpm (1/4/12) sn: 4099-03

☐ Other Source:

[redacted]

Date: 10-7-13 Calibration Due: 10-7-13

10/07/13

conditions of ANSI N323A - 1997.

CERTIFICATE OF CALIBRATION

CAL# 17854A
Prev. 17188A

health physics instruments
330 D South Kellogg Ave, Goleta, CA 93117 Tel 805.967.8422 Fax 805.964.3162 Division of Far West Technology, Inc. www.fwt.com

Instrument Owned By:	URS
Description:	Survey Meter
Equipment No.:	
Manufacturer:	Ludlum
Model:	2221
Serial Number	144863
Batteries:	2 ea D cell
Radiation Detected:	Gamma, Beta
Probe Type, SN:	GM Pancake, 44-9, 037047
Received Condition:	Good
Procedure Used:	HPI-CAL-14A
Calibration Date:	10/14/13
Date Due:	10/14/14

Source	Standard Description			Due Date
CS2	CS137		mR/h@1m	8/27
CS1	CS137		mR/h@1m	8/27
CS1-1	CS137		mR/h@1m	8/27
CS1-2	CS137		mR/h@1m	8/27
CS1-3	CS137	189.0	mR/h@1m	8/27
S	Ra226	2.095	mR/h@1m	8/27
W	Ra226	0.138	mR/h@1m	8/27
N1	Cf252		mrem/h@1m	Assay 1/91
N3	Cf252		mrem/h@1m	Assay 4/08
Pulser	Model MP2	SN001		7/14

Environmental		
Temperature:	20	Deg C
Barometer:	752	mmHg
Humidity:	48	%

CALIBRATION RESULTS

Efficiency: Sr90 27.0 %

Efficiency: Tc99 16.0 %

Source	Distance	Exposure	Scale Readings (CPM)			
	cm	mR/h	X1000	X100	X10	X1
CS1-3	112.4	150	180,000			
	194.4	50	80,000			
S	37.4	15		32,000		
	64.7	5		11,000		
	118.2	1.5			3,400	
	204.7	0.5			1,200	
W	95.9	0.15				400
	166.1	0.05				120

Comments, Repairs, and Adjustments:

☑ Instrument OK CPM ranges set electronically. Background subtracted from all readings. ( ) indicates reading as found. Gamma calibrations from the side of all [redacted] the customer.

DATE
10-21-13

CERTIFICATE OF CALIBRATION

CAL# 17854B
Prev. 17188B
Sheet 2 of 2

health physics instruments
330 D South Kellogg Ave, Goleta, CA 93117 Tel 805.967.8422 Fax 805.964.3162 Division of Far West Technology, Inc. www.fwt.com

Description:	Survey Meter	Radiation Detected:	Alpha
Serial No..:	144863	Probe Type, SN:	Scintillator 43-5, 040438
Received Condition:	Good		

CALIBRATION RESULTS

Source	Time	Scale Readings Scaler		
		Average 1 Minute		
Am241	4 Min	15,583		

Comments, Repairs, and Adjustments:

[redacted]

ibrations from the side of all
ner.

DATE 10/24/13

CERTIFICATE OF CALIBRATION

CAL# 17844A
Prev. 17190A

health physics instruments

330 D South Kellogg Ave, Goleta, CA 93117 Tel 805.967.8422 Fax 805.964.3162 Division of Far West Technology, Inc. www.fwt.com

Instrument Owned By:	URS
Description:	Survey Meter
Equipment No.:	
Manufacturer:	Ludlum
Model:	2221
Serial Number	147508
Batteries:	4 ea D cell
Radiation Detected:	Gamma, Beta
Probe Type, SN:	Scint, 44-2, 924321
Received Condition:	Good
Procedure Used:	HPI-CAL-14A
Calibration Date:	10/18/13
Date Due:	10/18/14

Source	Standard Description			Due Date
CS2	CS137		mR/h@1m	8/27
CS1	CS137		mR/h@1m	8/27
CS1-1	CS137		mR/h@1m	8/27
CS1-2	CS137		mR/h@1m	8/27
CS1-3	CS137		mR/h@1m	8/27
S	Ra226	2.095	mR/h@1m	8/27
W	Ra226	0.138	mR/h@1m	8/27
N1	Cf252		mrem/h@1m	Assay 1/91
N3	Cf252		mrem/h@1m	Assay 4/08
Pulser	Model MP2	SN001		7/14

Environmental	
Temperature:	24 Deg C
Barometer:	761 mmHg
Humidity:	44 %

CALIBRATION RESULTS

Source	Distance	Exposure	Scale Readings (CPM)					
	cm	mR/h	X1000	X100	X10	X1	1 Min Scaler *1	cpm/µR/h *2
W	26.3	2	300,000				292,177	144 K
	83.1	.2	60,000				51,520	233 K
	262.7	.02		10,000			27,931	256 K
	831.1	.002		6,000			5,811	467 K
		Background			4,800	O/S	4,877	
		AM241	Yes					
Pulser	CPM	LOG	X1K	X100	X10	X1	Scaler	Time Min
	400K	400K	400K				400,009	1.0
	400K	400K	400K				200,005	0.5
	40K	40K		40K			40,001	0.1
	4.0K	4K			4K		40,001	10
	400					400	400,009	1

High Voltage: 1056 Threshold: 103

Comments, Repairs, and Adjustments:
*1 Background not subtracted from readings
*2 Calculated on 1 min scale minus background where applicable
Window out on all measurements

☑ Instrument OK CPM ranges set electronically. Background subtracted from all readings. ( ) indicates reading as found. Gamma calibrations from the side of all [redacted] e customer.

DATE 10/28/13

CERTIFICATE OF CALIBRATION

CAL# 17844B
Prev. 17190B

health physics instruments
330 D South Kellogg Ave, Goleta, CA 93117 Tel 805.967.8422 Fax 805.964.3162 Division of Far West Technology, Inc. www.fwt.com

Instrument Owned By:	URS
Description:	Survey Meter
Equipment No.:	
Manufacturer:	Ludlum
Model:	2221
Serial Number	147508
Batteries:	4 ea D cell
Radiation Detected:	Gamma, Beta
Probe Type, SN:	Scint, 44-10, PR149451
Received Condition:	Good
Procedure Used:	HPI-CAL-14A
Calibration Date:	10/10/13
Date Due:	10/10/14

Source	Standard Description			Due Date
CS2	CS137		mR/h@1m	8/27
CS1	CS137		mR/h@1m	8/27
CS1-1	CS137		mR/h@1m	8/27
CS1-2	CS137		mR/h@1m	8/27
CS1-3	CS137		mR/h@1m	8/27
S	Ra226	2.095	mR/h@1m	8/27
W	Ra226	0.138	mR/h@1m	8/27
N1	Cf252		mrem/h@1m	Assay 1/91
N3	Cf252		mrem/h@1m	Assay 4/08
Pulser	Model MP2	SN001		7/14

Environmental		
Temperature:	22	Deg C
Barometer:	760	mmHg
Humidity:	44	%

CALIBRATION RESULTS

Source	Distance	Exposure	Scale Readings (CPM)					
	cm	µR/h	X1000	X100	X10	X1	1 Min Scaler *1	cpm/µR/h *2
W	31.4	1400	O/S				923,743	657
	67.8	300	300,000				248,768	816
	99.3	140	145,000				132,203	917
	117.5	100	100,000				95,214	913
	166.1	50	50,000				52,744	977
	185.7	40		48,000			44,387	1,012
	214.5	30		36,000			34,146	1,009
	262.7	20		26,000			25,556	1,083
	371.5	10		14,000			15,095	1,120
	525.3	5		11,000			10,640	1,360
		Background			4,000	O/S	3,891	
		AM241	Yes					
Pulser	**CPM**	**LOG**	**X1K**	**X100**	**X10**	**X1**	**Scaler**	**Time Min**
	400K	400K	400K				400,009	1.0
	400K	400K	400K				200,005	0.5
	40K			40K			4,000	0.1
	4.0K				4.0K		40,001	10
	400					400	400	1

High Voltage: 1050 Threshold: 103

Comments, Repairs, and Adjustments:
*1 Background not subtracted from readings
*2 Calculated on 1 min scale minus background where applicable
Window out on all measurements

☒ Instrument OK

CPM ranges set electronically. Background subtracted from all readings. ( ) indicates reading as found. Gamma calibrations from the side of all

[redacted] 10/28/13

CERTIFICATE OF CALIBRATION

CAL# 17844C
Prev. 17190C
Sheet 3 of 3

health physics instruments
330 D South Kellogg Ave, Goleta, CA 93117 Tel 805.967.8422 Fax 805.964.3162 Division of Far West Technology, Inc. www.fwt.com

Description:	Survey Meter	Radiation Detected:	Gamma
Serial No..:	147508	Probe Type, SN:	Scintillator, 44-20, 202595
Received Condition:	Good		

CALIBRATION RESULTS

Source	Distance	Exposure	Scale Readings (CPM)					
	cm	µR/h	X1000	X100	X10	X1	1 Min Scaler *1	cpm/µR/h *2
W	31.4	1400	O/S				1,645,856	1,157
	67.8	300	O/S				567,053	1,803
	99.3	140	320,000				299,696	1,953
	117.5	100	240,000				226,643	2,004
	166.1	50	140,000				126,986	2,015
	185.7	40	120,000				106,065	1,996
	214.5	30	90,000				83,783	1,919
	262.7	20	60,000				62,313	1,805
	371.5	10		40,000			38,057	1,184
	525.3	Background		27,000	O/S	O/S	26,220	
		AM241		Yes				

Comments, Repairs, and Adjustments:
*1 Background not subtracted from readings
*2 Calculated on 1 min scale minus background where applicable
Window out on all measurements

☒ Instrument OK CPM ranges set electronically. Background subtracted from all readings. ( ) indicates reading as found. Gamma calibrations from the side of all

[redacted]

ATE 10/28/13

CERTIFICATE OF CALIBRATION

CAL# 17843A
Prev. 17189A

health physics instruments
330 D South Kellogg Ave, Goleta, CA 93117 Tel 805.967.8422 Fax 805.964.3162 Division of Far West Technology, Inc. www.fwt.com

Instrument Owned By:	URS
Description:	Survey Meter
Equipment No.:	
Manufacturer:	Ludlum
Model:	2221
Serial Number	148443
Batteries:	4 ea D cell
Radiation Detected:	Gamma, Beta
Probe Type, SN:	Scint, 44-2, 014678
Received Condition:	Good
Procedure Used:	HPI-CAL-14A
Calibration Date:	10/18/13
Date Due:	10/18/14

Source	Standard Description			Due Date
CS2	CS137		mR/h@1m	8/27
CS1	CS137		mR/h@1m	8/27
CS1-1	CS137		mR/h@1m	8/27
CS1-2	CS137		mR/h@1m	8/27
CS1-3	CS137		mR/h@1m	8/27
S	Ra226	2.095	mR/h@1m	8/27
W	Ra226	0.138	mR/h@1m	8/27
N1	Cf252		mrem/h@1m	Assay 1/91
N3	Cf252		mrem/h@1m	Assay 4/08
Pulser	Model MP2	SN001		7/14

Environmental	
Temperature:	24 Deg C
Barometer:	762 mmHg
Humidity:	44 %

CALIBRATION RESULTS

Source	Distance	Exposure	Scale Readings (CPM)					
	cm	mR/h	X1000	X100	X10	X1	1 Min Scaler *1	cpm/µR/h *2
W	41.5	0.8	340K				329,108	407 K
	83.1	0.2	90K				91,059	441 K
	131.3	0.08		38K			40,485	471 K
	262.7	0.02		12K			12,409	484 K
	587.4	0.004			4,600		5,276	637 K
		Background			2,500	O/S	2,429	

Pulser	CPM	LOG	X1000	X100	X10	X1	Scaler	Time Min
	400K	400,000	400K				399,856	1.0
	400K	400,000	400K				19,928	0.5
	40K	40K		40K			3,999	0.1
	4.0K	4k			3,999		39,986	10
	400	400				400	400	1

High Voltage: 893 Threshold: 99

Comments, Repairs, and Adjustments:
*1 Background not subtracted from readings
*2 Calculated on 1 min scale minus background where applicable
Window out on all measurements

☑ Instrument OK CPM ranges set electronically. Background subtracted from all readings. ( ) indicates reading as found. Gamma calibrations from the side of all [redacted] ner.

E
10/28/13

CERTIFICATE OF CALIBRATION

CAL# 17843B
Prev. 17189B

health physics instruments

330 D South Kellogg Ave, Goleta, CA 93117 Tel 805.967.8422 Fax 805.964.3162 Division of Far West Technology, Inc. www.fwt.com

Instrument Owned By:	URS
Description:	Survey Meter
Equipment No.:	
Manufacturer:	Ludlum
Model:	2221
Serial Number	148443
Batteries:	2 ea D cell
Radiation Detected:	Gamma, Beta
Probe Type, SN:	Scint, 44-10, PR150422
Received Condition:	Good
Procedure Used:	HPI-CAL-14A
Calibration Date:	10/10/13
Date Due:	10/10/14

Source	Standard Description			Due Date
CS2	CS137		mR/h@1m	8/27
CS1	CS137		mR/h@1m	8/27
CS1-1	CS137		mR/h@1m	8/27
CS1-2	CS137		mR/h@1m	8/27
CS1-3	CS137		mR/h@1m	8/27
S	Ra226	2.095	mR/h@1m	8/27
W	Ra226	0.138	mR/h@1m	8/27
N1	Cf252		mrem/h@1m	Assay 1/91
N3	Cf252		mrem/h@1m	Assay 4/08
Pulser	Model MP2	SN001		7/14

Environmental	
Temperature:	24 Deg C
Barometer:	761 mmHg
Humidity:	45 %

CALIBRATION RESULTS

Source	Distance	Exposure	Scale Readings (CPM)					
	cm	µR/h	X1000	X100	X10	X1	1 Min Scaler *1	cpm/µR/h *2
W	31.4	1400	O/S				886,635	630
	67.8	300	260,000				243,645	798
	99.3	140	140,000				123,737	854
	117.5	100	100,000				92,117	880
	166.1	50	60,000				50,745	932
	185.7	40		44,000			43,271	981
	214.5	30		35,000			34,271	1,005
	262.7	20		26,000			25,565	1,072
	371.5	10		16,000			15,636	1,151
	525.3	5		12,000			10,870	1,348
		Background		4,000			4,128	
		AM241	Yes					
Pulser	**CPM**	**LOG**	**X1K**	**X100**	**X10**	**X1**	**Scaler**	**Time Min**
	400K	400,000	400,000				399,855	1.0
	400K	400,000	400,000				199,927	0.5
	40K	40,000		40,000			3,999	0.1
	4.0K	4,000			4,000		39,986	10
	400	400				400	400	1

High Voltage: 990 Threshold: 99

Comments, Repairs, and Adjustments:
*1 Background not subtracted from readings
*2 Calculated on 1 min scale minus background where applicable
Window out on all measurements

☒ Instrument OK CPM ranges set electronically. Background subtracted from all readings. ( ) indicates reading as found. Gamma calibrations from the side of all [redacted] omer.

[redacted] TE 28/13

CERTIFICATE OF CALIBRATION

CAL# 17843C
Prev. 17189C
Sheet 3 of 3

health physics instruments
330 D South Kellogg Ave, Goleta, CA 93117 Tel 805.967.8422 Fax 805.964.3162 Division of Far West Technology, Inc. www.fwt.com

Description:	Survey Meter	Radiation Detected:	Gamma
Equipment No.:	148443	Probe Type, SN:	Scintillator, 44-20, 202595
Received Condition:	Good		

CALIBRATION RESULTS

Source	Distance	Exposure	Scale Readings (CPM)					
	cm	µR/h	X1000	X100	X10	X1	1 Min Scaler *1	cpm/µR/h *2
W	31.4	1400	O/S				1,775,919	1,261
	67.8	300	O/S				543,926	1,780
	99.3	140	310,000				297,145	2,052
	117.5	100	250,000				215,885	2,060
	166.1	50	130,000				123,136	2,266
	185.7	40	120,000				101,602	2,294
	214.5	30	90,000				79,832	2,333
	262.7	20	70,000				58,609	2,738
	371.5	10		39,000			36,658	2,680
	525.3	Background		10,000	O/S	O/S	9,850	
		AM241	Yes					

Comments, Repairs, and Adjustments:
*1 Background not subtracted from readings
*2 Calculated on 1 min scale minus background where applicable
Window out on all measurements

[redacted] ons from the side of all

TE
0/28/13

Certificate of Calibration

Calibration and Voltage Plateau

Environmental Restoration Group, Inc.
8809 Washington St NE, Suite 150
Albuquerque, NM 87113
(505) 298-4224
www.ERGoffice.com

Meter:	Manufacturer:	Ludlum	Model Number:	2221r	Serial Number:	254783
Detector:	Manufacturer:	Ludlum	Model Number:	44-10	Serial Number:	PR150784

- [x] Mechanical Check
- [x] F/S Response Check
- [x] Geotropism
- [x] Meter Zeroed
- [x] THR/WIN Operation
- [x] Reset Check
- [x] Audio Check
- [x] Battery Check (Min 4.4 VDC)

HV Check (+/- 2.5%): [x] 500 V [x] 1000 V [x] 1500 V

Cable Length: [ ] 39-inch [ ] 72-inch [x] Other: 15'

Source Distance: [ ] Contact [x] 6 inches [ ] Other:

Source Geometry: [x] Side [ ] Below [ ] Other:

Threshold: 10 mV

Window:

Barometric Pressure: 24.83 inches Hg

Temperature: 75 °F

Relative Humidity: 20 %

Instrument found within tolerance: [x] Yes [ ] No

Range/Multiplier	Reference Setting	"As Found Reading"	Meter Reading	Integrated 1-Min. Count	Log Scale Count
x 1000	400	400	400	400869	400
x 1000	100	100	100		100
x 100	40	400	400	40083	400
x 100	10	100	100		100
x 10	4	400	400	4008	400
x 10	1	100	100		100
x 1	400	400	400	400	400
x 1	100	100	100		100

High Voltage	Source Counts	Background
800	982	
900	28715	
1000	49486	
1050	58632	
1100	64244	
1150	68596	
1200	70869	10995
1250	72759	

Voltage Plateau

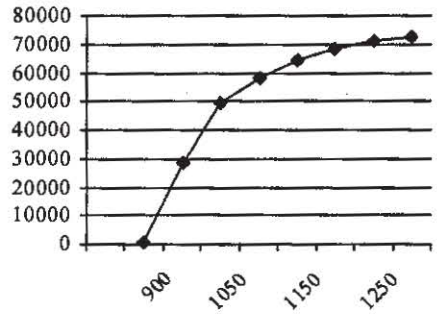

Comments: HV Plateau Scaler Count Time = 1-min. Recommended HV = 1200. 52966cpm with source 6" below shielded 44-10.

Reference Instruments and/or Sources:

Ludlum pulser serial number: [ ] 97743 [x] 201932

Fluke multimeter serial number: [ ] 8749012

[ ] Alpha Source: Th-230 @ 12,800 dpm (1/4/12) sn: 4098-03

[x] Gamma Source Cs-137 @ 5.2 uCi (1/4/12) sn: 4097-03

[ ] Beta Source: Tc-99 @ 17,700 dpm (1/4/12) sn: 4099-03

[ ] Other Source:

[redacted]

Calibration Date: 10-7-13 Calibration Due: 10-7-14

Date: 10/07/13

This calibration conforms to the requirements and acceptable calibration conditions of ANSI N323A - 1997.

Certificate of Calibration

Calibration and Voltage Plateau

Environmental Restoration Group, Inc.
8809 Washington St NE, Suite 150
Albuquerque, NM 87113
(505) 298-4224
www.ERGoffice.com

Meter:	Manufacturer:	Ludlum	Model Number:	2360	Serial Number:	184903
Detector:	Manufacturer:	Ludlum	Model Number:	43-93	Serial Number:	PR179868

- ☑ Mechanical Check
- ☐ F/S Response Check
- ☑ Geotropism
- ☑ Meter Zeroed
- ☑ THR/WIN Operation
- ☑ Reset Check
- ☑ Audio Check
- ☑ Battery Check (Min 4.4 VDC)

HV Check (+/- 2.5%): ☑ 500 V ☑ 1000 V ☑ 1500 V

Cable Length: ☑ 39-inch ☐ 72-inch ☐ Other:

Source Distance: ☑ Contact ☐ 6 inches ☐ Other:

Source Geometry ☐ Side ☑ Below ☐ Other:

Alpha Threshold:	120 mV	Barometric Pressure:	24.57	inches Hg
Beta Threshold:	4	Temperature:	79	°F
Beta Window:	30 mV	Relative Humidity	20	%

Instrument found within tolerance: ☑ Yes ☐ No

Range/Multiplier	Reference Setting	"As Found Reading"	Meter Reading	Integrated 1-Min. Count α	Integrated 1-Min. Count β
x 1000	400 Kcpm	400	400	399252	399374
x 1000	100 Kcpm	100	100		
x 100	40 Kcpm	400	400	39884	39889
x 100	10 Kcpm	100	100		
x 10	4 Kcpm	400	400	3989	3989
x 10	1 Kcpm	100	100		
x 1	400 cpm	400	400	399	399
x 1	100 cpm	100	100		

High Voltage	Alpha Source α	Alpha Source β	Beta Source α	Beta Source β	Background α	Background β
700	2075	246	6	1282	0	130
725	2419	363	5	1992	2	181
750	2663	431	10	2533	1	289
775	2691	533	8	2905	3	347

Voltage Plateau

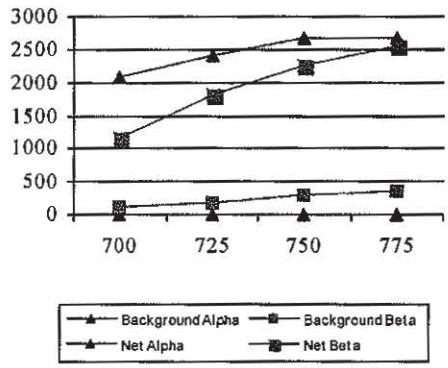

Comments: HV Plateau Scaler Count Time = 1 min. Recommended HV = 750

Reference Instruments and/or Sources:

Ludlum pulser serial number: ☐ 97743 ☑ 201932

Fluke multimeter serial number ☑ 8749012

☑ Alpha Source: Th-230 (s/n 4098-03) 12,800 dpm on 1/4/12

☑ Beta Source: ~~Tc-99~~ Nb-94 (sn: 4099-03) 17,700 dpm on 1/4/12

☐ Gamma Source Cs-137 @ 5.2 uCi (1/4/12) sn: 4097-03

☐ Other Source:

[redacted]

Calibration Date: 6-9-14 Calibration Due 6-9-15

Date: 6/09/14

ERG Form ITC. 101.C

This calibration conforms to the requirements and acceptable calibration conditions of ANSI N323A - 1997

Certificate of Calibration

Calibration and Voltage Plateau

Environmental Restoration Group, Inc.
8809 Washington St NE, Suite 150
Albuquerque, NM 87113
(505) 298-4224
www.ERGoffice.com

Meter:	Manufacturer:	Ludlum	Model Number:	2360	Serial Number: 215282
Detector:	Manufacturer:	Ludlum	Model Number:	43-93	Serial Number: PR339058

- [x] Mechanical Check
- [x] THR/WIN Operation
- HV Check (+/- 2.5%): [x] 500 V [x] 1000 V [x] 1500 V
- [ ] F/S Response Check
- [x] Reset Check
- Cable Length: [x] 39-inch [ ] 72-inch [ ] Other:
- [x] Geotropism
- [x] Audio Check
- [x] Meter Zeroed
- [x] Battery Check (Min 4.4 VDC)

Source Distance: [x] Contact [ ] 6 inches [ ] Other:

Source Geometry [ ] Side [x] Below [ ] Other:

Alpha Threshold:	120 mV	Barometric Pressure:	24.51	inches Hg
Beta Threshold:	4	Temperature:	79	°F
Beta Window:	30 mV	Relative Humidity	20	%

Instrument found within tolerance: [x] Yes [ ] No

Range/Multiplier	Reference Setting	"As Found Reading"	Meter Reading	Integrated 1-Min. Count α	Integrated 1-Min. Count β
x 1000	400 Kcpm	400	400	400170	400169
x 1000	100 Kcpm	100	100		
x 100	40 Kcpm	400	400	39986	40015
x 100	10 Kcpm	100	100		
x 10	4 Kcpm	400	400	4001	4002
x 10	1 Kcpm	100	100		
x 1	400 cpm	400	400	400	400
x 1	100 cpm	100	100		

High Voltage	Alpha Source α	Alpha Source β	Beta Source α	Beta Source β	Background α	Background β
625	2144	271	66	1219	0	100
650	2540	305	77	1960	2	142
675	2688	360	87	2593	2	214
700	2820	508	76	3168	3	302

Voltage Plateau

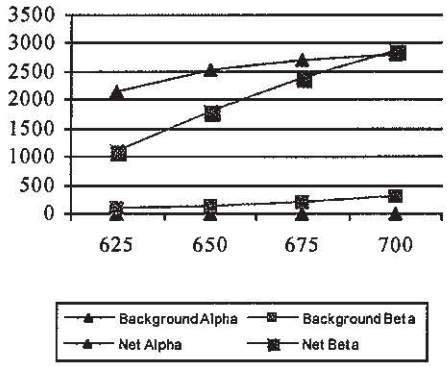

Comments: HV Plateau Scaler Count Time = 1 min. Recommended HV = 675

Reference Instruments and/or Sources:

Ludlum pulser serial number: [ ] 97743 [x] 201932

Fluke multimeter serial number [x] 8749012

- [x] Alpha Source: Th-230 (s/n 4098-03) 12,800 dpm on 1/4/12
- [x] Beta Source: Tc-99 (sn: 4099-03) 17,700 dpm on 1/4/12
- [ ] Gamma Source Cs-137 @ 5.2 uCi (1/4/12) sn: 4097-03
- [ ] Other Source:

[redacted]

Calibration Date: 6-18-14 Calibration Due 6-18-15

Date: 6/23/14

ERG Form ITC. 101.C

This calibration conforms to the requirements and acceptable calibration conditions of ANSI N323A - 1997

Certificate of Calibration

Calibration and Voltage Plateau

Environmental Restoration Group, Inc.
8809 Washington St NE, Suite 150
Albuquerque, NM 87113
(505) 298-4224
www.ERGoffice.com

Meter:	Manufacturer:	Ludlum	Model Number:	2360	Serial Number:	220246
Detector:	Manufacturer:	Ludlum	Model Number:	43-93	Serial Number:	PR199826

- [x] Mechanical Check
- [ ] F/S Response Check
- [x] Geotropism
- [x] Meter Zeroed
- [x] THR/WIN Operation
- [x] Reset Check
- [x] Audio Check
- [x] Battery Check (Min 4.4 VDC)

HV Check (+/- 2.5%): [x] 500 V [x] 1000 V [x] 1500 V

Cable Length: [x] 39-inch [ ] 72-inch [ ] Other:

Source Distance: [x] Contact [ ] 6 inches [ ] Other:

Source Geometry: [ ] Side [x] Below [ ] Other:

Alpha Threshold:	120 mV	Barometric Pressure:	24.83	inches Hg
Beta Threshold:	4	Temperature:	62	°F
Beta Window:	30 mV	Relative Humidity	20	%

Instrument found within tolerance: [x] Yes [ ] No

Range/Multiplier	Reference Setting	"As Found Reading"	Meter Reading	Integrated 1-Min. Count α	Integrated 1-Min. Count β
x 1000	400 Kcpm	400	400	401153	401152
x 1000	100 Kcpm	100	100		
x 100	40 Kcpm	400	400	40101	40101
x 100	10 Kcpm	100	100		
x 10	4 Kcpm	400	400	4010	4010
x 10	1 Kcpm	100	100		
x 1	400 cpm	400	400	401	401
x 1	100 cpm	100	100		

High Voltage	Alpha Source α	Alpha Source β	Beta Source α	Beta Source β	Background α	Background β
700	1875	423	6	1435	0	159
725	2267	437	1	2092	0	208
750	2415	569	4	2565	1	253
775	2479	741	5	3087	1	324

Voltage Plateau

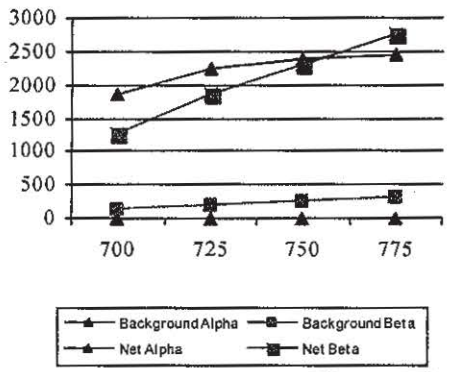

Comments: HV Plateau Scaler Count Time = 1 min. Recommended HV = 750

Reference Instruments and/or Sources:

Ludlum pulser serial number: [ ] 97743 [x] 201932

Fluke multimeter serial number [x] 8749012

[x] Alpha Source: Th-230 (s/n 4098-03) 12,800 dpm on 1/4/12

[x] Beta Source: Tc-99 (sn: 4099-03) 17,700 dpm on 1/4/12

[ ] Gamma Source Cs-137 @ 5.2 uCi (1/4/12) sn: 4097-03

[ ] Other Source:

[redacted]

Calibration Date: 11-6-13 Calibration Due: 11-6-14

Date: 11/06/13

This calibration conforms to the requirements and acceptable calibration conditions of ANSI N323A - 1997.

Certificate of Calibration

Calibration and Voltage Plateau

Environmental Restoration Group, Inc.
8809 Washington St NE, Suite 150
Albuquerque, NM 87113
(505) 298-4224
www.ERGoffice.com

Meter:	Manufacturer:	Ludlum	Model Number:	2360	Serial Number:	276943
Detector:	Manufacturer:	Ludlum	Model Number:	43-93	Serial Number:	PR197430

- ☑ Mechanical Check
- ☐ F/S Response Check
- ☑ Geotropism
- ☑ Meter Zeroed
- ☑ THR/WIN Operation
- ☑ Reset Check
- ☑ Audio Check
- ☑ Battery Check (Min 4.4 VDC)

HV Check (+/- 2.5%): ☑ 500 V ☑ 1000 V ☑ 1500 V

Cable Length: ☑ 39-inch ☐ 72-inch ☐ Other:

Source Distance: ☑ Contact ☐ 6 inches ☐ Other:

Source Geometry: ☐ Side ☑ Below ☐ Other:

Alpha Threshold: 120 mV
Beta Threshold: 4
Beta Window: 30 mV

Barometric Pressure: 24.51 inches Hg
Temperature: 76 °F
Relative Humidity 20 %

Instrument found within tolerance: ☑ Yes ☐ No

Range/Multiplier	Reference Setting	"As Found Reading"	Meter Reading	Integrated 1-Min. Count α	Integrated 1-Min. Count β
x 1000	400 Kcpm	400	400	400829	401445
x 1000	100 Kcpm	100	100		
x 100	40 Kcpm	400	400	40176	40183
x 100	10 Kcpm	100	100		
x 10	4 Kcpm	400	400	4020	4021
x 10	1 Kcpm	100	100		
x 1	400 cpm	400	400	402	403
x 1	100 cpm	100	100		

High Voltage	Alpha Source α	Alpha Source β	Beta Source α	Beta Source β	Background α	Background β
675	1625	379	4	788	1	87
700	2048	351	12	1481	2	117
725	2329	391	10	2230	0	185
750	2568	559	9	2779	1	291

Voltage Plateau

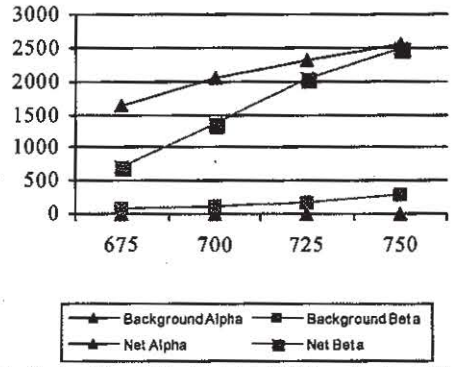

Comments: HV Plateau Scaler Count Time = 1 min. Recommended HV =725

Reference Instruments and/or Sources:

Ludlum pulser serial number: ☐ 97743 ☑ 201932

Fluke multimeter serial number ☑ 8749012

☑ Alpha Source: Th-230 (s/n 4098-03) 12,800 dpm on 1/4/12

☑ Beta Source: Tc-99 (sn: 4099-03) 17,700 dpm on 1/4/12

☐ Gamma Source Cs-137 @ 5.2 uCi (1/4/12) sn: 4097-03

☐ Other Source:

[redacted]

Calibration Date: 10-3-13 Calibration Due: 10-3-14

Date: 10/3/13

This calibration conforms to the requirements and acceptable calibration conditions of ANSI N323A - 1997.

Certificate of Calibration

Calibration and Voltage Plateau

Environmental Restoration Group, Inc.
8809 Washington St NE, Suite 150
Albuquerque, NM 87113
(505) 298-4224
www.ERGoffice.com

Meter/Detector: Manufacturer: Ludlum Model Number: 2929 & 43-10-1 Serial Number: 121870 & PR126405

- [x] Mechanical Check
- [ ] F/S Response Check
- [ ] Geotropism
- [ ] Meter Zeroed
- [x] THR/WIN Operation
- [ ] Reset Check
- [x] Audio Check
- [ ] Battery Check (Min 4.4 VDC)

HV Check (+/- 2.5%): [x] 500 V [x] 1000 V [x] 1500 V

Cable Length: [x] 39-inch [ ] 72-inch [ ] Other:

Source Distance: [ ] Contact [ ] 6 inches [x] Other: In Planchet

Source Geometry: [ ] Side [ ] Below [x] Other: In Planchet

Alpha Threshold: 180 mV Barometric Pressure: 24.57 inches Hg

Beta Threshold: 4 mV Temperature: 73 °F

Beta Window: 48 mV Relative Humidity: 20 %

Instrument found within tolerance: [x] Yes [ ] No

Range/Multiplier	Reference Setting	Integrated 1-Min. Count "As Found" α	Integrated 1-Min. Count "As Found" β	Integrated 1-Min. Count "Reading" α	Integrated 1-Min. Count "Reading" β
x 1000	400 Kcpm	401277	401276	401277	401276
x 100	40 Kcpm	40136	40145	40136	40145
x 10	4 Kcpm	4012	4012	4012	4012
x 1	400 cpm	401	401	401	401

High Voltage	Pot. Setting	Alpha Source α	Alpha Source β	Beta Source α	Beta Source β	Background α	Background β
800	3.22	3949	297	2	2567	2	49
850	3.46	4486	292	2	3515	0	35
900	3.62	4673	325	7	4059	1	65
950	3.86	4894	698	3	4677	1	127

Comments: HV Plateau Scaler Count Time = 1-min. Recommended HV = 900, Pot. setting = 3.62

Reference Instruments and/or Sources:

Ludlum pulser serial number: [ ] 97743 [x] 201932

Fluke multimeter serial numbe [ ] 8749012

[x] Alpha Source: Th-230 @ 12,800 dpm (1/4/12) sn: 4098-03

[ ] Gamma Source Cs-137 @ 5.2 uCi (1/4/12) sn: 4097-03

[x] [redacted]-03

[ ] Other Source:

Calibration Date 9-18-13 Calibration Due 9-18-14

Date: 9/18/13

Damaged

This calibration conforms to the requirements and acceptable calibration conditions of ANSI N323A - 1997.

Certificate of Calibration

Calibration and Voltage Plateau

Environmental Restoration Group, Inc.
8809 Washington St NE, Suite 150
Albuquerque, NM 87113
(505) 298-4224
www.ERGoffice.com

Meter/Detector: Manufacturer: Ludlum Model Number: 2929 & 43-10-1 Serial Number: 137607 & PR142936

- [x] Mechanical Check
- [ ] F/S Response Check
- [ ] Geotropism
- [ ] Meter Zeroed
- [x] THR/WIN Operation
- [ ] Reset Check
- [x] Audio Check
- [ ] Battery Check (Min 4.4 VDC)

HV Check (+/- 2.5%): [x] 500 V [x] 1000 V [x] 1500 V

Cable Length: [x] 39-inch [ ] 72-inch [ ] Other: ____

Source Distance: [ ] Contact [ ] 6 inches [x] Other: In Planchet

Source Geometry: [ ] Side [ ] Below [x] Other: In Planchet

Alpha Threshold: 170 mV Barometric Pressure: 24.54 inches Hg

Beta Threshold: 4 mV Temperature: 75 °F

Beta Window: 46 mV Relative Humidity: 20 %

Instrument found within tolerance: [x] Yes [ ] No

Range/Multiplier	Reference Setting	Integrated 1-Min. Count "As Found" α	Integrated 1-Min. Count "As Found" β	Integrated 1-Min. Count "Reading" α	Integrated 1-Min. Count "Reading" β
x 1000	400 Kcpm	399964	399967	399964	399967
x 100	40 Kcpm	39995	39990	39995	39990
x 10	4 Kcpm	3999	4000	3999	4000
x 1	400 cpm	400	400	400	400

High Voltage	Pot. Setting	Alpha Source α	Alpha Source β	Beta Source α	Beta Source β	Background α	Background β
550	3.3	4153	290	2	1913	0	32
600	3.52	4494	268	3	2709	1	56
650	3.8	4636	352	3	3558	1	79
700	4.1	4831	632	5	4532	0	85

Comments: HV Plateau Scaler Count Time = 1-min. Recommended HV = 650, Pot. setting = 3.8

Reference Instruments and/or Sources:

Ludlum pulser serial number: [ ] 97743 [x] 201932

Fluke multimeter serial number [ ] 8749012

- [x] Alpha Source: Th-230 @ 12,800 dpm (1/4/12) sn: 4098-03
- [x] Beta Source: Tc-99 @ 17,700 dpm (1/4/12) sn: 4099-03
- [ ] Gamma Source Cs-137 @ 5.2 uCi (1/4/12) sn: 4097-03
- [ ] Other Source:

[redacted]

Calibration Date 10-3-13 Calibration Due 10-3-14

Date: 10/3/13

This calibration conforms to the requirements and acceptable calibration conditions of ANSI N323A - 1997.

Certificate of Calibration

Calibration and Voltage Plateau

Environmental Restoration Group, Inc.
8809 Washington St NE, Suite 150
Albuquerque, NM 87113
(505) 298-4224
www.ERGoffice.com

Meter/Detector: Manufacturer: Ludlum Model Number: 2929 & 43-10-1 Serial Number: 147736 & PR150788

- [x] Mechanical Check
- [ ] F/S Response Check
- [ ] Geotropism
- [ ] Meter Zeroed
- [x] THR/WIN Operation
- [ ] Reset Check
- [x] Audio Check
- [ ] Battery Check (Min 4.4 VDC)

HV Check (+/- 2.5%): [x] 500 V [x] 1000 V [x] 1500 V

Cable Length: [x] 39-inch [ ] 72-inch [ ] Other:

Source Distance: [ ] Contact [ ] 6 inches [x] Other: In Plancher

Source Geometry: [ ] Side [ ] Below [x] Other: In Plancher

Alpha Threshold:	170 mV	Barometric Pressure:	24.48	inches Hg
Beta Threshold:	4 mV	Temperature:	75	°F
Beta Window:	46 mV	Relative Humidity:	20	%

Instrument found within tolerance: [x] Yes [ ] No

Range/Multiplier	Reference Setting	Integrated 1-Min. Count "As Found" α	Integrated 1-Min. Count "As Found" β	Integrated 1-Min. Count "Reading" α	Integrated 1-Min. Count "Reading" β
x 1000	400 Kcpm	400797	400809	400797	400809
x 100	40 Kcpm	40079	40079	40079	40079
x 10	4 Kcpm	4008	4008	4008	4008
x 1	400 cpm	400	400	400	400

High Voltage	Pot. Setting	Alpha Source α	Alpha Source β	Beta Source α	Beta Source β	Background α	Background β
500	3.02	3843	329	12	1311	2	36
550	3.22	4561	331	9	2681	2	57
600	3.42	4873	484	15	3801	1	80
650	3.62	4840	812	15	4757	3	126

Comments: HV Plateau Scaler Count Time = 1-min. Recommended HV = 600, Pot. Setting = 3.42

Reference Instruments and/or Sources:

Ludlum pulser serial number: [ ] 97743 [x] 201932

Fluke multimeter serial number [ ] 8749012

- [x] Alpha Source: Th-230 @ 12,800 dpm (1/4/12) sn: 4098-03
- [x] Beta Source: Tc-99 @ 17,700 dpm (1/4/12) sn: 4099-03
- [ ] Gamma Source Cs-137 @ 5.2 uCi (1/4/12) sn: 4097-03
- [ ] Other Source:

[redacted]

Calibration Date 10-28-13 Calibration Due 10-28-14

Date: 10/28/13

This calibration conforms to the requirements and acceptable calibration conditions of ANSI N323A - 1997

EBERLINE SERVICES

CERTIFICATE OF CALIBRATION

Electroplated Beta Standard

S.O.# 7085
P.O.# N/A

Description of Standard:

Model No. DNS-12 Serial No. 7181-11 Isotope Tc-99

Electroplated on polished SS disc, 0.79 mm thick.

Total diameter of 4.77 cm and an active diameter of 4.45 cm.

The radioactive material is permanently fixed to the disc by heat treatment without any covering over the active surface.

Measurement Method:

The 2pi beta emission rate was measured using an internal gas flow proportional chamber. Absolute counting of beta particles emitted in the hemisphere above the active surface was verified by counting above, below, and at the operative voltage. The calibration is traceable to NIST by reference to an NIST calibrated beta source S/N 75323-201.

Measurement Result:

The observed beta count rate from the surface of the disc per minute (cpm) on the calibration date was:

8,550 ± 342

The total disintegration rate (dpm) assuming 25 % backscatter of beta particles from the surface of the disc, was:

13,700 ± 547 (0.00616 μCi)

The uncertainty of the measurement is 4 %, which is the sum of random counting error at the 99% confidence level, and the estimated upper limit of systematic error in this measurement.

Calibrated by: ART REUST Reviewed by: [redacted]

Calibration Technician: [redacted] Q.A. M[redacted]

Calibration Date: 3-07-2011 Reviewed Date: 03-08-11

Source Manufacturing Lab
7021 Pan American Freeway NE
Albuquerque, New Mexico 87109-4238
(505) 761-5413 Fax (505) 761-5416
areust@eberlineservices.com

EBERLINE SERVICES

CERTIFICATE OF CALIBRATION

Electroplated Alpha Standard

S.O.# 7023
P.O.# N/A

Description of Standard:

Model No. DNS-11 Serial No. 7120-10 Isotope Th-230

Electroplated on polished SS disc, 0.79 mm thick.

Total diameter of 4.77 cm and an active diameter of 4.45 cm.

The radioactive material is permanently fixed to the disc by heat treatment without any covering over the active surface.

Measurement Method:

The 2pi alpha emission rate was measured using an internal gas flow proportional chamber. Absolute counting of alpha particles emitted in the hemisphere above the active surface was verified by counting above, below, and at the operative voltage. The calibration is traceable to NIST by reference to an NIST calibrated alpha source S/N 75322-201

Measurement Result:

The observed alpha particles emitted from the surface of the disc per minute (cpm) on the calibration date was:

9,910 ± 297

The total disintegration rate (dpm) assuming 1.5% backscatter of alpha particles from the surface of the disc, was:

19,500 ± 585 (0.00879 μCi)

The uncertainty of the measurement is 3 %, which is the sum of random counting error at the 99% confidence level, and the estimated upper limit of systematic error in this measurement.

Calibrated by: ART REUST Reviewed [redacted]

Calibration Technician [redacted]

Calibration Date: 7-27-2010 Reviewed Date: 7/27/10

Source Manufacturing Lab
7021 Pan American Freeway NE
Albuquerque, New Mexico 87109-4238
(505) 761-5413 Fax (505) 761-5416
areust@eberlineservices.com

Appendix E-2-1

Radiation Instrument Daily Reports

Source Check Form

Instrument Configuration			
Instrument(Mfg/Mdl)	Ludlum Model 3	Serial #	51256
Probe(Mfg/Mdl)	Ludlum 44-9 Pancake	Serial #	42780
Cable Length	39" cable	HV	NA

Calibration					
Calibration Date	10/11/2013	Certificate #	N/A	Due	10/11/2014

Check Source						
Source Name	Pink	Serial #		Assay Date	N/A	
Nuclide	Mixed	Half life	N/A	Activity	N/A	

Detailed description of instrument and source positioning for daily check, and any other notes

Initial QC Set Up						
	Source			Bkdg		Net
	1	10000		20		9980
	2	11000		10		10990
	3	12000		20		11980
	4	10000		30		9970
	5	11000		30		10970
	6	12000		40		11960
	7	10000		40		9960
	8	10000		40		9960
	9	10000		30		9970
	10	10000		30		9970
Average		10600		29		10571
Tolerance		8480		23		8457

Source Check Form

Instrument Configuration			
Instrument(Mfg/Mdl)	Ludlum Model 3	Serial #	51256
Probe(Mfg/Mdl)	Ludlum 44-9 Pancake	Serial #	42780
Cable Length	39" cable	HV	NA

Calibration					
Calibration Date	10/11/2013	Certificate #	N/A	Due	10/11/2014

Check Source						
Source Name	Pink	Serial #		Assay Date	N/A	
Nuclide	Mixed	Half life	N/A	Activity	N/A	

Detailed description of instrument and source positioning for daily check, and any other notes

			Start		Bkgd		Source			Net			
Date	Project	Initials	/end	Batt	Reading	Units	Reading	Units	Ok?	Reading	Units	Ok?	Notes
11/20/2013	NFSS	PA	Start	ok	20	cpm	12000	cpm	Ok	11980	cpm	Ok	
11/21/2013	NFSS	PA	Start	ok	30	cpm	12000	cpm	Ok	11970	cpm	Ok	
11/22/2013	NFSS	PA	Start	ok	30	cpm	11000	cpm	Ok	10970	cpm	Ok	
11/22/2013	NFSS	PA	End	OK	20	cpm	11000	cpm	Ok	10980	cpm	Ok	
11/25/2013	NFSS	PA	Start	ok	20	cpm	10000	cpm	Ok	9980	cpm	Ok	
11/26/2013	NFSS	PA	Start	ok	20	cpm	12000	cpm	Ok	11980	cpm	Ok	
11/26/2013	NFSS	ML	End	ok	20	cpm	12000	cpm	Ok	11980	cpm	Ok	
11/27/2013	NFSS	PA	Start	ok	30	cpm	12000	cpm	Ok	11970	cpm	Ok	
12/2/2013	NFSS	PA	Start	ok	20	cpm	12000	cpm	Ok	11980	cpm	Ok	
12/3/2013	NFSS	PA	Start	ok	20	cpm	12000	cpm	Ok	11980	cpm	Ok	
12/4/2013	NFSS	ML	End	ok	30	cpm	12000	cpm	Ok	11970	cpm	Ok	
12/5/2013	NFSS	PA	Start	ok	30	cpm	12000	cpm	Ok	11970	cpm	Ok	
6/11/2014	NFSS	ARJ	Start	ok	30	cpm	12000	cpm	Ok	11970	cpm	Ok	PreShipment che
6/11/2014	NFSS	ARJ	Start	ok	40	cpm	11000	cpm	Ok	10960	cpm	Ok	PreShipment che
6/16/2014	NFSS	KG	Start	ok	40	cpm	12000	cpm	Ok	11960	cpm	Ok	
6/17/2014	NFSS	KG	Start	ok	40	cpm	12000	cpm	Ok	11960	cpm	Ok	
6/17/2014	NFSS	KG	End	ok	40	cpm	10000	cpm	Ok	9960	cpm	Ok	
6/18/2014	NFSS	KG	Start	ok	40	cpm	10000	cpm	Ok	9960	cpm	Ok	
6/18/2014	NFSS	KG	End	ok	40	cpm	12000	cpm	Ok	11960	cpm	Ok	
6/19/2014	NFSS	KG	Start	ok	20	cpm	12000	cpm	Ok	11980	cpm	Ok	
6/19/2014	NFSS	KG	End	ok	40	cpm	10000	cpm	Ok	9960	cpm	Ok	
6/20/2014	NFSS	KG	Start	ok	40	cpm	12000	cpm	Ok	11960	cpm	Ok	
6/20/2014	NFSS	KG	End	ok	40	cpm	12000	cpm	Ok	11960	cpm	Ok	
6/23/2014	NFSS	KG	Start	ok	20	cpm	12000	cpm	Ok	11980	cpm	Ok	
6/23/2014	NFSS	KG	End	ok	20	cpm	12000	cpm	Ok	11980	cpm	Ok	
6/24/2014	NFSS	KG	Start	ok	20	cpm	10000	cpm	Ok	9980	cpm	Ok	
6/24/2014	NFSS	KG	End	ok	20	cpm	10000	cpm	Ok	9980	cpm	Ok	
6/25/2014	NFSS	KG	Start	ok	20	cpm	12000	cpm	Ok	11980	cpm	Ok	
6/25/2014	NFSS	KG	End	ok	20	cpm	12000	cpm	Ok	11980	cpm	Ok	
6/26/2014	NFSS	KG	Start	ok	30	cpm	12000	cpm	Ok	11970	cpm	Ok	
6/26/2014	NFSS	KG	End	ok	40	cpm	10000	cpm	Ok	9960	cpm	Ok	
6/27/2014	NFSS	KG	Start	ok	40	cpm	10000	cpm	Ok	9960	cpm	Ok	
6/27/2014	NFSS	KG	End	ok	40	cpm	10000	cpm	Ok	9960	cpm	Ok	
6/30/2014	NFSS	KG	Start	ok	40	cpm	12000	cpm	Ok	11960	cpm	Ok	
6/30/2014	NFSS	KG	End	ok	40	cpm	12000	cpm	Ok	11960	cpm	Ok	
7/1/2014	NFSS	KG	Start	ok	40	cpm	12000	cpm	Ok	11960	cpm	Ok	
7/1/2014	NFSS	KG	End	ok	40	cpm	12000	cpm	Ok	11960	cpm	Ok	
7/2/2014	NFSS	KG	Start	ok	40	cpm	12000	cpm	Ok	11960	cpm	Ok	
7/2/2014	NFSS	KG	End	ok	40	cpm	12000	cpm	Ok	11960	cpm	Ok	
7/7/2014	NFSS	KG	Start	ok	40	cpm	10000	cpm	Ok	9960	cpm	Ok	
7/7/2014	NFSS	KG	End	ok	40	cpm	12000	cpm	Ok	11960	cpm	Ok	

Source Check Form

Instrument Configuration			
Instrument(Mfg/Mdl)	Model 3	Serial #	80145
Probe(Mfg/Mdl)	44-2	Serial #	89189
Cable Length	3 ft	HV	N/A

Instrument Calibration					
Calibration Date	11/7/2013	Certificate #	17838	Due	11/7/2014

Check Source					
Source Name	Pink	Serial #	Pink	Assay Date	N/A
Nuclide	Mixed	Half life	Mixed	Activity	N/A

Detailed description of instrument and source positioning for daily check, and any other notes

On contact

Initial QC Set Up				
	Source		Bkdg	Net
	1	22	5	17
	2	21	5	16
	3	23	4	19
	4	24	5	19
	5	25	6	19
	6	24	6	18
	7	23	5	18
	8	24	6	18
	9	26	6	20
	10	24	5	19
Average		24	5	18
Tolerance		19	4	15
± 20%		28	6	22

Source Check Form

Instrument Configuration			
Instrument(Mfg/Mdl)	Model 3	Serial #	80145
Probe(Mfg/Mdl)	44-2	Serial #	89189
Cable Length	3 ft	HV	N/A

Instrument Calibration					
Calibration Date	11/7/2013	Certificate #	17838	Due	11/7/2014

Check Source					
Source Name	Pink	Serial #	Pink	Assay Date	N/A
Nuclide	Mixed	Half life	Mixed	Activity	N/A

Detailed description of instrument and source positioning for daily check, and any other notes

On contact

Tolerances					4-6		19-28			15-22			
			Start		Bkgd		Source			Net			
Date	Project	Initials	/end	Batt	Reading	Units	Reading	Units	Ok?	Reading	Units	Ok?	Notes
6/11/2014	NFSS	ARJ	Start	ok	5	uR/h	24	uR/h	Ok	19	uR/h	Ok	Preshipment check
6/11/2014	NFSS	ARJ	Start	ok	5	uR/h	23	uR/h	Ok	18	uR/h	Ok	Preshipment check
6/16/2014	NFSS	KG	Start	ok	5	uR/h	22	uR/h	Ok	17	uR/h	Ok	
6/17/2014	NFSS	KG	Start	ok	4	uR/h	22	uR/h	Ok	18	uR/h	Ok	
6/17/2014	NFSS	KG	End	ok	5	uR/h	22	uR/h	Ok	17	uR/h	Ok	
6/18/2014	NFSS	KG	Start	ok	4	uR/h	2	uR/h	Fail	-2	uR/h	Fail	
6/18/2014	NFSS	KG	End	ok	4	uR/h	22	uR/h	Ok	18	uR/h	Ok	
6/19/2014	NFSS	KG	Start	ok	4	uR/h	20	uR/h	Ok	16	uR/h	Ok	
6/19/2014	NFSS	KG	End	ok	4	uR/h	20	uR/h	Ok	16	uR/h	Ok	
6/20/2014	NFSS	KG	Start	ok	4	uR/h	20	uR/h	Ok	16	uR/h	Ok	
6/20/2014	NFSS	KG	End	ok	4	uR/h	20	uR/h	Ok	16	uR/h	Ok	
6/23/2014	NFSS	KG	Start	ok	4	uR/h	20	uR/h	Ok	16	uR/h	Ok	
6/23/2014	NFSS	KG	End	ok	4	uR/h	22	uR/h	Ok	18	uR/h	Ok	
6/24/2014	NFSS	KG	Start	ok	4	uR/h	22	uR/h	Ok	18	uR/h	Ok	
6/24/2014	NFSS	KG	End	ok	4	uR/h	20	uR/h	Ok	16	uR/h	Ok	
6/25/2014	NFSS	KG	Start	ok	4	uR/h	20	uR/h	Ok	16	uR/h	Ok	
6/25/2014	NFSS	KG	End	ok	4	uR/h	20	uR/h	Ok	16	uR/h	Ok	
6/26/2014	NFSS	KG	Start	ok	4	uR/h	20	uR/h	Ok	16	uR/h	Ok	
6/26/2014	NFSS	KG	End	ok	4	uR/h	20	uR/h	Ok	16	uR/h	Ok	
6/27/2014	NFSS	KG	Start	ok	4	uR/h	20	uR/h	Ok	16	uR/h	Ok	
6/27/2014	NFSS	KG	End	ok	4	uR/h	20	uR/h	Ok	16	uR/h	Ok	
6/30/2014	NFSS	KG	Start	ok	4	uR/h	22	uR/h	Ok	18	uR/h	Ok	
6/30/2014	NFSS	KG	End	ok	4	uR/h	20	uR/h	Ok	16	uR/h	Ok	
7/1/2014	NFSS	KG	Start	ok	4	uR/h	22	uR/h	Ok	18	uR/h	Ok	
7/1/2014	NFSS	KG	End	ok	4	uR/h	22	uR/h	Ok	18	uR/h	Ok	
7/2/2014	NFSS	KG	Start	ok	4	uR/h	20	uR/h	Ok	16	uR/h	Ok	
7/2/2014	NFSS	KG	End	ok	4	uR/h	22	uR/h	Ok	18	uR/h	Ok	
7/7/2014	NFSS	KG	Start	ok	5	uR/h	22	uR/h	Ok	17	uR/h	Ok	
7/7/2014	NFSS	KG	End	ok	4	uR/h	20	uR/h	Ok	16	uR/h	Ok	

Source Check Form

Instrument Configuration			
Instrument(Mfg/Mdl)	Ludlum Model 12	Serial #	229277
Probe(Mfg/Mdl)	Ludlum 44-9 Pancake	Serial #	125462
Cable Length	39" cable	HV	900

Calibration					
Calibration Date	10/7/2013	Certificate #	N/A	Due	10/7/2014

Check Source						
Source Name	Beta Gamma Source	Serial #		Assay Date	N/A	
Nuclide	Mixed	Half life	N/A	Activity	N/A	

Detailed description of instrument and source positioning for daily check, and any other notes

Initial QC Set Up						
	Source			Bkdg		Net
	1	14000		30		13970
	2	12000		20		11980
	3	13000		60		12940
	4	14000		40		13960
	5	13000		50		12950
	6	14000		40		13960
	7	12000		40		11960
	8	14000		50		13950
	9	13000		40		12960
	10	14000		40		13960
Average		13300		41		13259
Tolerance		10640		33		10607
± 20%		15960		49		15911

Source Check Form

Instrument Configuration			
Instrument(Mfg/Mdl)	Ludlum Model 12	Serial #	229277
Probe(Mfg/Mdl)	Ludlum 44-9 Pancake	Serial #	125462
Cable Length	39" cable	HV	900

Calibration					
Calibration Date	10/7/2013	Certificate #	N/A	Due	10/7/2014

Check Source						
Source Name	Beta Gamma Source	Serial #		Assay Date	N/A	
Nuclide	Mixed	Half life	N/A	Activity	N/A	

Detailed description of instrument and source positioning for daily check, and any other notes

Tolerances					33-49		10640-15960			10607-15911			
					Bkgd		Source			Net			
Date	Project	Initials	Start /end	Batt	Reading	Units	Reading	Units	Ok?	Reading	Units	Ok?	Notes
						cpm		cpm			cpm	Fail	
11/1/2013	NFSS	PA	Start	ok	40	cpm	14000	cpm	Ok	13960	cpm	Ok	
11/4/2013	NFSS	PA	End	ok	40	cpm	14000	cpm	Ok	13960	cpm	Ok	
11/5/2013	NFSS	PA	Start	ok	20	cpm	15000	cpm	Ok	14980	cpm	Ok	
11/5/2013	NFSS	PA	End	ok		cpm		cpm			cpm	Fail	Bad cable/ issue

Source Check Form

Instrument Configuration			
Instrument(Mfg/Mdl)	Ludlum Model 12	Serial #	281910
Probe(Mfg/Mdl)	Ludlum 44-9 Pancake	Serial #	308451
Cable Length	39" cable	HV	900

Calibration					
Calibration Date	10/3/2013	Certificate #	N/A	Due	10/3/2014

Check Source						
Source Name	Pink	Serial #	Pink	Assay Date	N/A	
Nuclide	Mixed	Half life	N/A	Activity	N/A	

Detailed description of instrument and source positioning for daily check, and any other notes

Initial QC Set Up						
	Source			Bkdg		Net
	1	12000		30		11970
	2	14000		20		13980
	3	13000		30		12970
	4	14000		20		13980
	5	14000		20		13980
	6	14000		30		13970
	7	13000		20		12980
	8	12000		30		11970
	9	14000		30		13970
	10	14000		20		13980
Average		13400		25		13375
Tolerance		10720		20		10700
± 20%		16080		30		16050

Source Check Form

Instrument Configuration			
Instrument(Mfg/Mdl)	Ludlum Model 12	Serial #	281910
Probe(Mfg/Mdl)	Ludlum 44-9 Pancake	Serial #	308451
Cable Length	39" cable	HV	900

Calibration					
Calibration Date	10/3/2013	Certificate #	N/A	Due	10/3/2014

Check Source						
Source Name	Pink	Serial #	Pink	Assay Date	N/A	
Nuclide	Mixed	Half life	N/A	Activity	N/A	

Detailed description of instrument and source positioning for daily check, and any other notes

Tolerances					20-30		10720-16080			10700-16050			
			Start		Bkgd		Source			Net			
Date	Project	Initials	/end	Batt	Reading	Units	Reading	Units	Ok?	Reading	Units	Ok?	Notes
						cpm		cpm			cpm	Fail	
11/1/2013	NFSS	PA	Start	ok	30	cpm	13000	cpm	Ok	12970	cpm	Ok	
11/4/2013	NFSS	PA	Start	ok	20	cpm	13000	cpm	Ok	12980	cpm	Ok	
11/5/2013	NFSS	ARJ/PA	Start	ok	30	cpm	14000	cpm	Ok	13970	cpm	Ok	
11/6/2013	NFSS	PA	Start	ok	30	cpm	13000	cpm	Ok	12970	cpm	Ok	
11/6/2013	NFSS	PA	End	ok	30	cpm	15000	cpm	Ok	14970	cpm	Ok	
11/7/2013	NFSS	PA	Start	ok	30	cpm	15000	cpm	Ok	14970	cpm	Ok	
11/7/2013	NFSS	PA	End	ok	30	cpm	14000	cpm	Ok	13970	cpm	Ok	
11/8/2013	NFSS	PA	Start	ok	20	cpm	13000	cpm	Ok	12980	cpm	Ok	
11/8/2013	NFSS	PA	End	ok	30	cpm	12000	cpm	Ok	11970	cpm	Ok	
11/11/2013	NFSS	PA	Start	ok	30	cpm	14000	cpm	Ok	13970	cpm	Ok	
11/11/2013	NFSS	PA	End	ok	30	cpm	16000	cpm	Ok	15970	cpm	Ok	
11/12/2013	NFSS	PA	Start	ok	20	cpm	14000	cpm	Ok	13980	cpm	Ok	
11/12/2013	NFSS	PA	End	ok	20	cpm	12000	cpm	Ok	11980	cpm	Ok	
11/13/2013	NFSS	PA	Start	ok	20	cpm	14000	cpm	Ok	13980	cpm	Ok	
11/13/2013	NFSS	PA	End	ok	30	cpm	13000	cpm	Ok	12970	cpm	Ok	
11/14/2013	NFSS	PA	Start	ok	20	cpm	14000	cpm	Ok	13980	cpm	Ok	
11/14/2013	NFSS	PA	End	ok	30	cpm	14000	cpm	Ok	13970	cpm	Ok	
11/15/2013	NFSS	PA	Start	ok	20	cpm	14000	cpm	Ok	13980	cpm	Ok	
11/15/2013	NFSS	PA	End	ok	20	cpm	14000	cpm	Ok	13980	cpm	Ok	
11/18/2013	NFSS	PA	Start	ok	30	cpm	13000	cpm	Ok	12970	cpm	Ok	
11/18/2013	NFSS	PA	End	ok	20	cpm	14000	cpm	Ok	13980	cpm	Ok	
11/19/2013	NFSS	PA	Start	ok	30	cpm	14000	cpm	Ok	13970	cpm	Ok	
11/19/2013	NFSS	PA	End	ok	20	cpm	12000	cpm	Ok	11980	cpm	Ok	
11/20/2013	NFSS	PA	Start	ok	40	cpm	14000	cpm	Ok	13960	cpm	Ok	
11/20/2013	NFSS	PA	End	ok	30	cpm	13000	cpm	Ok	12970	cpm	Ok	
11/21/2013	NFSS	PA	Start	ok	30	cpm	14000	cpm	Ok	13970	cpm	Ok	
11/21/2013	NFSS	PA	End	ok	30	cpm	14000	cpm	Ok	13970	cpm	Ok	
11/22/2013	NFSS	PA	Start	ok	30	cpm	14000	cpm	Ok	13970	cpm	Ok	
11/22/2013	NFSS	PA	End	ok	30	cpm	13000	cpm	Ok	12970	cpm	Ok	
11/25/2013	NFSS	PA	Start	ok	20	cpm	14000	cpm	Ok	13980	cpm	Ok	
11/25/2013	NFSS	PA	End	ok	20	cpm	13000	cpm	Ok	12980	cpm	Ok	

Source Check Form

Instrument Configuration			
Instrument(Mfg/Mdl)	Ludlum Model 12	Serial #	281910
Probe(Mfg/Mdl)	Ludlum 44-9 Pancake	Serial #	308451
Cable Length	39" cable	HV	900

Calibration					
Calibration Date	10/3/2013	Certificate #	N/A	Due	10/3/2014

Check Source						
Source Name	Pink	Serial #	Pink	Assay Date	N/A	
Nuclide	Mixed	Half life	N/A	Activity	N/A	

Detailed description of instrument and source positioning for daily check, and any other notes

Tolerances					20-30		10720-16080			10700-16050			
			Start		Bkgd		Source			Net			
11/26/2013	NFSS	PA	Start	ok	20	cpm	14000	cpm	Ok	13980	cpm	Ok	
11/26/2013	NFSS	PA	End	ok	20	cpm	14000	cpm	Ok	13980	cpm	Ok	
11/27/2013	NFSS	PA	Start	ok	30	cpm	14000	cpm	Ok	13970	cpm	Ok	
11/27/2013	NFSS	PA	End	OK	30	cpm	14000	cpm	Ok	13970	cpm	Ok	
12/2/2013	NFSS	PA	Start	ok	20	cpm	12000	cpm	Ok	11980	cpm	Ok	
12/2/2013	NFSS	PA	End	ok	20	cpm	13000	cpm	Ok	12980	cpm	Ok	
12/3/2013	NFSS	PA	Start	ok	20	cpm	14000	cpm	Ok	13980	cpm	Ok	
12/3/2013	NFSS	PA	End	ok	30	cpm	12000	cpm	Ok	11970	cpm	Ok	
12/4/2013	NFSS	PA	Start	ok	30	cpm	13000	cpm	Ok	12970	cpm	Ok	
12/4/2013	NFSS	PA	End	ok	30	cpm	14000	cpm	Ok	13970	cpm	Ok	
12/5/2013	NFSS	PA	Start	ok	20	cpm	12000	cpm	Ok	11980	cpm	Ok	
12/5/2013	NFSS	PA	End	ok	30	cpm	14000	cpm	Ok	13970	cpm	Ok	
12/6/2013	NFSS	PA	Start	ok	40	cpm	14000	cpm	Ok	13960	cpm	Ok	
12/6/2013	NFSS	PA	End	ok	30	cpm	13000	cpm	Ok	12970	cpm	Ok	
12/9/2013	NFSS	PA	Start	ok	40	cpm	13000	cpm	Ok	12960	cpm	Ok	
12/9/2013	NFSS	PA	End	ok	40	cpm	12000	cpm	Ok	11960	cpm	Ok	
12/10/2013	NFSS	PA	Start	ok	40	cpm	14000	cpm	Ok	13960	cpm	Ok	
12/10/2013	NFSS	PA	End	ok	30	cpm	13000	cpm	Ok	12970	cpm	Ok	
12/11/2013	NFSS	PA	Start	ok	40	cpm	16000	cpm	Ok	15960	cpm	Ok	
12/11/2013	NFSS	PA	End	ok	40	cpm	14000	cpm	Ok	13960	cpm	Ok	
12/12/2013	NFSS	PA	Start	ok	30	cpm	14000	cpm	Ok	13970	cpm	Ok	
12/12/2013	NFSS	PA	End	ok	40	cpm	16000	cpm	Ok	15960	cpm	Ok	
12/13/2013	NFSS	PA	Start	ok	40	cpm	14000	cpm	Ok	13960	cpm	Ok	
12/13/2013	NFSS	PA	End	ok	30	cpm	14000	cpm	Ok	13970	cpm	Ok	
12/16/2013	NFSS	PA	Start	ok	40	cpm	12000	cpm	Ok	11960	cpm	Ok	
12/16/2013	NFSS	PA	End	ok	30	cpm	14000	cpm	Ok	13970	cpm	Ok	
12/17/2013	NFSS	PA	Start	ok	40	cpm	16000	cpm	Ok	15960	cpm	Ok	
12/17/2013	NFSS	PA	End	ok	40	cpm	15000	cpm	Ok	14960	cpm	Ok	
12/18/2013	NFSS	PA	Start	ok	20	cpm	14000	cpm	Ok	13980	cpm	Ok	
12/18/2013	NFSS	PA	End	ok	40	cpm	15000	cpm	Ok	14960	cpm	Ok	
12/19/2013	NFSS	PA	Start	ok	20	cpm	16000	cpm	Ok	15980	cpm	Ok	
12/19/2013	NFSS	PA	End	ok	40	cpm	15000	cpm	Ok	14960	cpm	Ok	

Source Check Form

Instrument Configuration			
Instrument(Mfg/Mdl)	Ludlum Model 12	Serial #	281980
Probe(Mfg/Mdl)	Ludlum 44-9 Pancake	Serial #	308445
Cable Length	39" cable	HV	900

Calibration					
Calibration Date	10/3/2013	Certificate #	N/A	Due	10/3/2014

Check Source						
Source Name	Pink	Serial #	Pink	Assay Date	N/A	
Nuclide	Mixed	Half life	N/A	Activity	N/A	

Detailed description of instrument and source positioning for daily check, and any other notes

Initial QC Set Up						
	Source			Bkdg		Net
	1	12000		20		11980
	2	14000		20		13980
	3	15000		20		14980
	4	14000		40		13960
	5	12000		30		11970
	6	14000		40		13960
	7	16000		30		15970
	8	15000		40		14960
	9	16000		40		15960
	10	15000		30		14970
Average		14300		31		14269
Tolerance		11440		25		11415
± 20%		17160		37		17123

Source Check Form

Instrument Configuration			
Instrument(Mfg/Mdl)	Ludlum Model 12	Serial #	281980
Probe(Mfg/Mdl)	Ludlum 44-9 Pancake	Serial #	308445
Cable Length	39" cable	HV	900

Calibration					
Calibration Date	10/3/2013	Certificate #	N/A	Due	10/3/2014

Check Source						
Source Name	Pink	Serial #	Pink	Assay Date	N/A	
Nuclide	Mixed	Half life	N/A	Activity	N/A	

Detailed description of instrument and source positioning for daily check, and any other notes

Tolerances					25-37		11440-17160			11415-17123			
			Start		Bkgd		Source			Net			
Date	Project	Initials	/end	Batt	Reading	Units	Reading	Units	Ok?	Reading	Units	Ok?	Notes
						cpm		cpm			cpm	Fail	
11/1/2013	NFSS	PA	Start	ok	40	cpm	16000	cpm	Ok	15960	cpm	Ok	
11/4/2013	NFSS	PA	Start	ok	30	cpm	17000	cpm	Ok	16970	cpm	Ok	
11/5/2013	NFSS	PA	Start	ok	20	cpm	16000	cpm	Ok	15980	cpm	Ok	
11/5/2013	NFSS	PA	End	ok	30	cpm	14000	cpm	Ok	13970	cpm	Ok	
11/6/2013	NFSS	PA	Start	ok	30	cpm	14000	cpm	Ok	13970	cpm	Ok	
11/6/2013	NFSS	PA	End	ok	30	cpm	13000	cpm	Ok	12970	cpm	Ok	
11/7/2013	NFSS	PA	Start	ok	30	cpm	14000	cpm	Ok	13970	cpm	Ok	
11/7/2013	NFSS	PA	End	ok	30	cpm	12000	cpm	Ok	11970	cpm	Ok	
11/8/2013	NFSS	PA	Start	ok	30	cpm	12000	cpm	Ok	11970	cpm	Ok	
11/8/2013	NFSS	PA	End	ok	30	cpm	13000	cpm	Ok	12970	cpm	Ok	
11/11/2013	NFSS	PA	Start	ok	30	cpm	16000	cpm	Ok	15970	cpm	Ok	
11/11/2013	NFSS	PA	End	ok	30	cpm	14000	cpm	Ok	13970	cpm	Ok	
11/12/2013	NFSS	PA	Start	ok	30	cpm	14000	cpm	Ok	13970	cpm	Ok	
11/12/2013	NFSS	PA	End	ok	30	cpm	14000	cpm	Ok	13970	cpm	Ok	
11/13/2013	NFSS	PA	Start	ok	30	cpm	14000	cpm	Ok	13970	cpm	Ok	
11/13/2013	NFSS	PA	End	ok	30	cpm	14000	cpm	Ok	13970	cpm	Ok	
11/14/2013	NFSS	PA	Start	ok	20	cpm	14000	cpm	Ok	13980	cpm	Ok	
11/14/2013	NFSS	PA	End	ok	20	cpm	12000	cpm	Ok	11980	cpm	Ok	
11/15/2013	NFSS	PA	Start	ok	20	cpm	14000	cpm	Ok	13980	cpm	Ok	
11/15/2013	NFSS	PA	End	ok	20	cpm	14000	cpm	Ok	13980	cpm	Ok	
11/18/2013	NFSS	PA	Start	ok	30	cpm	15000	cpm	Ok	14970	cpm	Ok	
11/18/2013	NFSS	PA	End	ok	20	cpm	16000	cpm	Ok	15980	cpm	Ok	
11/19/2013	NFSS	PA	Start	ok	20	cpm	14000	cpm	Ok	13980	cpm	Ok	
11/19/2013	NFSS	PA	End	ok	30	cpm	14000	cpm	Ok	13970	cpm	Ok	
11/20/2013	NFSS	PA	Start	ok	20	cpm	12000	cpm	Ok	11980	cpm	Ok	
11/20/2013	NFSS	PA	End	ok	30	cpm	17000	cpm	Ok	16970	cpm	Ok	
11/21/2013	NFSS	PA	Start	ok	30	cpm	14000	cpm	Ok	13970	cpm	Ok	
11/21/2013	NFSS	PA	End	ok	30	cpm	14000	cpm	Ok	13970	cpm	Ok	
11/22/2013	NFSS	PA	Start	ok	30	cpm	14000	cpm	Ok	13970	cpm	Ok	
11/22/2013	NFSS	PA	End	ok	30	cpm	14000	cpm	Ok	13970	cpm	Ok	
11/25/2013	NFSS	PA	Start	ok	30	cpm	16000	cpm	Ok	15970	cpm	Ok	

Source Check Form

Instrument Configuration			
Instrument(Mfg/Mdl)	Ludlum Model 12	Serial #	281980
Probe(Mfg/Mdl)	Ludlum 44-9 Pancake	Serial #	308445
Cable Length	39" cable	HV	900

Calibration					
Calibration Date	10/3/2013	Certificate #	N/A	Due	10/3/2014

Check Source						
Source Name	Pink	Serial #	Pink	Assay Date	N/A	
Nuclide	Mixed	Half life	N/A	Activity	N/A	

Detailed description of instrument and source positioning for daily check, and any other notes

Tolerances					25-37		11440-17160			11415-17123			
			Start		Bkgd		Source			Net			
11/25/2013	NFSS	PA	End	ok	30	cpm	15000	cpm	Ok	14970	cpm	Ok	
11/26/2013	NFSS	PA	Start	ok	20	cpm	15000	cpm	Ok	14980	cpm	Ok	
11/26/2013	NFSS	PA	End	ok	30	cpm	16000	cpm	Ok	15970	cpm	Ok	
11/27/2013	NFSS	PA	Start	ok	30	cpm	14000	cpm	Ok	13970	cpm	Ok	
11/27/2013	NFSS	PA	End	ok	30	cpm	15000	cpm	Ok	14970	cpm	Ok	
12/2/2013	NFSS	PA	Start	ok	20	cpm	14000	cpm	Ok	13980	cpm	Ok	
12/2/2013	NFSS	PA	End	ok	30	cpm	14000	cpm	Ok	13970	cpm	Ok	
12/3/2013	NFSS	PA	Start	ok	20	cpm	15000	cpm	Ok	14980	cpm	Ok	
12/3/2013	NFSS	ML	End	ok	30	cpm	14000	cpm	Ok	13970	cpm	Ok	
12/4/2013	NFSS	PA	Start	ok	40	cpm	15000	cpm	Ok	14960	cpm	Ok	
12/4/2013	NFSS	PA	End	ok	40	cpm	14000	cpm	Ok	13960	cpm	Ok	
12/5/2013	NFSS	PA	Start	ok	20	cpm	12000	cpm	Ok	11980	cpm	Ok	
12/5/2013	NFSS	ML	End	ok	40	cpm	12000	cpm	Ok	11960	cpm	Ok	
12/6/2013	NFSS	PA	Start	ok	40	cpm	12000	cpm	Ok	11960	cpm	Ok	
12/6/2013	NFSS	PA	End	ok	30	cpm	13000	cpm	Ok	12970	cpm	Ok	
12/9/2013	NFSS	PA	Start	ok	40	cpm	14000	cpm	Ok	13960	cpm	Ok	
12/9/2013	NFSS	PA	End	ok	30	cpm	14000	cpm	Ok	13970	cpm	Ok	
12/10/2013	NFSS	PA	Start	ok	40	cpm	14000	cpm	Ok	13960	cpm	Ok	
12/10/2013	NFSS	PA	End	ok	30	cpm	13000	cpm	Ok	12970	cpm	Ok	
12/11/2013	NFSS	PA	Start	ok	40	cpm	14000	cpm	Ok	13960	cpm	Ok	
12/11/2013	NFSS	PA	End	ok	40	cpm	14000	cpm	Ok	13960	cpm	Ok	
12/12/2013	NFSS	PA	Start	ok	40	cpm	13000	cpm	Ok	12960	cpm	Ok	
12/13/2013	NFSS	PA	start	ok	20	cpm	14000	cpm	Ok	13980	cpm	Ok	
12/13/2013	NFSS	PA	end	ok	40	cpm	13000	cpm	Ok	12960	cpm	Ok	
12/16/2013	NFSS	PA	Start	ok	40	cpm	15000	cpm	Ok	14960	cpm	Ok	
12/17/2013	NFSS	PA	Start	ok	40	cpm	14000	cpm	Ok	13960	cpm	Ok	
12/18/2013	NFSS	PA	Start	ok	30	cpm	15000	cpm	Ok	14970	cpm	Ok	
12/19/2013	NFSS	PA	Start	ok	40	cpm	16000	cpm	Ok	15960	cpm	Ok	

Source Check Form

Instrument Configuration			
Instrument(Mfg/Mdl)	Ludlum Model 12S	Serial #	102868
Probe(Mfg/Mdl)	Ludlum 44-9 Pancake	Serial #	15129
Cable Length	39" cable	HV	900

Calibration					
Calibration Date	10/21/2013	Certificate #	17853B	Due	10/21/2014

Check Source						
Source Name	Beta Gamma Source	Serial #	7181-11	Assay Date	3/7/2011	
Nuclide	Tc-99	Half life	211000 years	Activity	8550 cpm 13700 dpm	

Detailed description of instrument and source positioning for daily check, and any other notes

Initial QC Set Up						
	Source			Bkdg		Net
	1	811		35		776
	2	1355		37		1318
	3	1356		42		1314
	4	1479		39		1440
	5	1395		41		1354
	6	1409		35		1374
	7	1371		36		1335
	8	1517		28		1489
	9	1486		34		1452
	10	1293		35		1258
Average		1347		36		1311
Tolerance		1078		29		1049
± 20%		1617		43		1573

Source Check Form

Instrument Configuration			
Instrument(Mfg/Mdl)	Ludlum Model 12S	Serial #	102868
Probe(Mfg/Mdl)	Ludlum 44-9 Pancake	Serial #	15129
Cable Length	39" cable	HV	900

Calibration					
Calibration Date	10/21/2013	Certificate #	17853B	Due	10/21/2014

Check Source						
Source Name	Beta Gamma Source	Serial #	7181-11	Assay Date	3/7/2011	
Nuclide	Tc-99	Half life	211000 years	Activity	8550 cpm 13700 dpm	

Detailed description of instrument and source positioning for daily check, and any other notes

Tolerances

Date	Project	Initials	Start /end	Batt	Bkgd Reading	Bkgd Units	Source Reading	Source Units	Source Ok?	Net Reading	Net Units	Net Ok?	Notes
11/1/2013	NFSS	PA	Start	ok	44	cpm	1445	cpm	Ok	1401	cpm	Ok	
11/4/2013	NFSS	PA	Start	ok	39	cpm	1540	cpm	Ok	1501	cpm	Ok	
11/5/2013	NFSS	PA	Start	ok	59	cpm	1499	cpm	Ok	1440	cpm	Ok	
11/5/2013	NFSS	PA	End	ok	57	cpm	1497	cpm	Ok	1440	cpm	Ok	
11/4/2013	NFSS	PA	Start	ok	39	cpm	1540	cpm	Ok	1501	cpm	Ok	
11/6/2013	NFSS	PA	Start	ok	33	cpm	1485	cpm	Ok	1452	cpm	Ok	
11/6/2013	NFSS	PA	End	ok	30	cpm	1598	cpm	Ok	1568	cpm	Ok	
11/7/2013	NFSS	PA	Start	ok	38	cpm	1344	cpm	Ok	1306	cpm	Ok	
11/7/2013	NFSS	PA	End	ok	41	cpm	1373	cpm	Ok	1332	cpm	Ok	
11/8/2013	NFSS	PA	Start	ok	41	cpm	1403	cpm	Ok	1362	cpm	Ok	
11/8/2013	NFSS	PA	End	ok	37	cpm	1386	cpm	Ok	1349	cpm	Ok	
11/11/2013	NFSS	PA	Start	ok	31	cpm	1118	cpm	Ok	1087	cpm	Ok	
11/11/2013	NFSS	PA	End	ok	33	cpm	1476	cpm	Ok	1443	cpm	Ok	
11/12/2013	NFSS	PA	Start	ok	33	cpm	1315	cpm	Ok	1282	cpm	Ok	
11/12/2013	NFSS	PA	End	ok	34	cpm	1416	cpm	Ok	1382	cpm	Ok	
11/13/2013	NFSS	PA	Start	ok	32	cpm	1438	cpm	Ok	1406	cpm	Ok	
11/13/2013	NFSS	PA	End	ok	30	cpm	1154	cpm	Ok	1124	cpm	Ok	
11/14/2013	NFSS	PA	Start	ok	29	cpm	1330	cpm	Ok	1301	cpm	Ok	
11/14/2013	NFSS	PA	End	ok	51	cpm	1542	cpm	Ok	1491	cpm	Ok	
11/15/2013	NFSS	PA	Start	ok	37	cpm	1398	cpm	Ok	1361	cpm	Ok	
11/15/2013	NFSS	PA	End	ok	41	cpm	1488	cpm	Ok	1447	cpm	Ok	
11/18/2013	NFSS	PA	Start	ok	41	cpm	1351	cpm	Ok	1310	cpm	Ok	
11/18/2013	NFSS	PA	End	ok	42	cpm	1344	cpm	Ok	1302	cpm	Ok	
11/19/2013	NFSS	PA	Start	ok	34	cpm	1325	cpm	Ok	1291	cpm	Ok	
11/19/2013	NFSS	PA	End	ok	34	cpm	1390	cpm	Ok	1356	cpm	Ok	
11/20/2013	NFSS	PA	Start	ok	37	cpm	1471	cpm	Ok	1434	cpm	Ok	
11/20/2013	NFSS	ML	End	ok	34	cpm	1426	cpm	Ok	1392	cpm	Ok	
11/21/2013	NFSS	PA	Start	ok	30	cpm	1194	cpm	Ok	1164	cpm	Ok	
11/21/2013	NFSS	PA	End	ok	52	cpm	1470	cpm	Ok	1418	cpm	Ok	
11/22/2013	NFSS	PA	Start	ok	58	cpm	1307	cpm	Ok	1249	cpm	Ok	

Source Check Form

Instrument Configuration			
Instrument(Mfg/Mdl)	Ludlum Model 12S	Serial #	102868
Probe(Mfg/Mdl)	Ludlum 44-9 Pancake	Serial #	15129
Cable Length	39" cable	HV	900

Calibration					
Calibration Date	10/21/2013	Certificate #	17853B	Due	10/21/2014

Check Source						
Source Name	Beta Gamma Source	Serial #	7181-11	Assay Date	3/7/2011	
Nuclide	Tc-99	Half life	211000 years	Activity	8550 cpm 13700 dpm	

Detailed description of instrument and source positioning for daily check, and any other notes

Tolerances

			Start		Bkgd		Source			Net			
11/22/2013	NFSS	PA	End	ok	40	cpm	1483	cpm	Ok	1443	cpm	Ok	
11/25/2013	NFSS	PA	Start	ok	41	cpm	1591	cpm	Ok	1550	cpm	Ok	
11/25/2013	NFSS	PA	End	ok	39	cpm	1497	cpm	Ok	1458	cpm	Ok	
11/26/2013	NFSS	PA	Start	ok	29	cpm	1416	cpm	Ok	1387	cpm	Ok	
11/26/2013	NFSS	ML	End	ok	30	cpm	1413	cpm	Ok	1383	cpm	Ok	
11/27/2013	NFSS	PA	Start	ok	34	cpm	1464	cpm	Ok	1430	cpm	Ok	
11/27/2013	NFSS	PA	End	ok	42	cpm	1339	cpm	Ok	1297	cpm	Ok	
12/2/2013	NFSS	PA	Start	ok	33	cpm	1340	cpm	Ok	1307	cpm	Ok	
12/2/2013	NFSS	PA	End	ok	28	cpm	1432	cpm	Ok	1404	cpm	Ok	
12/3/2013	NFSS	PA	Start	ok	38	cpm	1453	cpm	Ok	1415	cpm	Ok	
12/3/2013	NFSS	PA	End	ok	29	cpm	1397	cpm	Ok	1368	cpm	Ok	
12/4/2013	NFSS	PA	Start	ok	39	cpm	1207	cpm	Ok	1168	cpm	Ok	
12/4/2013	NFSS	PA	End	ok	37	cpm	1403	cpm	Ok	1366	cpm	Ok	
12/5/2013	NFSS	PA	Start	ok	34	cpm	1476	cpm	Ok	1442	cpm	Ok	
12/5/2013	NFSS	PA	End	ok	32	cpm	1420	cpm	Ok	1388	cpm	Ok	
12/6/2013	NFSS	PA	Start	ok	40	cpm	1243	cpm	Ok	1203	cpm	Ok	
12/6/2013	NFSS	PA	End	ok	28	cpm	1394	cpm	Ok	1366	cpm	Ok	
12/9/2013	NFSS	PA	Start	ok	38	cpm	1458	cpm	Ok	1420	cpm	Ok	
12/9/2013	NFSS	PA	End	ok	29	cpm	1504	cpm	Ok	1475	cpm	Ok	
12/10/2013	NFSS	PA	Start	ok	30	cpm	1315	cpm	Ok	1285	cpm	Ok	
12/10/2013	NFSS	PA	End	ok	30	cpm	1432	cpm	Ok	1402	cpm	Ok	
12/11/2013	NFSS	PA	Start	ok	36	cpm	1412	cpm	Ok	1376	cpm	Ok	
12/11/2013	NFSS	PA	End	ok	42	cpm	1478	cpm	Ok	1436	cpm	Ok	
12/12/2013	NFSS	PA	Start	ok	34	cpm	1424	cpm	Ok	1390	cpm	Ok	
12/12/2013	NFSS	PA	End	ok	33	cpm	1420	cpm	Ok	1387	cpm	Ok	
12/13/2013	NFSS	PA	Start	ok	41	cpm	1310	cpm	Ok	1269	cpm	Ok	
12/13/2013	NFSS	PA	End	ok	31	cpm	1338	cpm	Ok	1307	cpm	Ok	
12/16/2013	NFSS	PA	Start	ok	25	cpm	1462	cpm	Ok	1437	cpm	Ok	
12/16/2013	NFSS	PA	End	ok	30	cpm	1252	cpm	Ok	1222	cpm	Ok	
12/17/2013	NFSS	PA	Start	ok	29	cpm	1363	cpm	Ok	1334	cpm	Ok	

Source Check Form

Instrument Configuration			
Instrument(Mfg/Mdl)	Ludlum Model 12S	Serial #	102868
Probe(Mfg/Mdl)	Ludlum 44-9 Pancake	Serial #	15129
Cable Length	39" cable	HV	900

Calibration					
Calibration Date	10/21/2013	Certificate #	17853B	Due	10/21/2014

Check Source						
Source Name	Beta Gamma Source	Serial #	7181-11	Assay Date	3/7/2011	
Nuclide	Tc-99	Half life	211000 years	Activity	8550 cpm 13700 dpm	

Detailed description of instrument and source positioning for daily check, and any other notes

Tolerances

			Start		Bkgd		Source			Net			
12/17/2013	NFSS	PA	End	ok	34	cpm	1367	cpm	Ok	1333	cpm	Ok	
12/18/2013	NFSS	PA	Start	ok	30	cpm	1441	cpm	Ok	1411	cpm	Ok	
12/18/2013	NFSS	PA	End	ok	40	cpm	1393	cpm	Ok	1353	cpm	Ok	
12/19/2013	NFSS	PA	Start	ok	49	cpm	1467	cpm	Ok	1418	cpm	Ok	
12/19/2013	NFSS	PA	End	ok	30	cpm	1410	cpm	Ok	1380	cpm	Ok	

Source Check Form

Instrument Configuration			
Instrument(Mfg/Mdl)	Ludlum 19	Serial #	144060
Probe(Mfg/Mdl)	Internal	Serial #	N/A
Cable Length	N/A	HV	N/A

Instrument Calibration					
Calibration Date	1/7/2013	Certificate #	N/A	Due	1/7/2014

Check Source					
Source Name	2m source #1	Serial #	2m source #1	Assay Date	N/A
Nuclide	Mixed	Half life	N/A	Activity	N/A

Detailed description of instrument and source positioning for daily check, and any other notes

On contact

Initial QC Set Up				
	Source		Bkdg	Net
	1	70	6	64
	2	80	6	74
	3	70	7	63
	4	70	6	64
	5	65	6	59
	6	70	6	64
	7	80	7	73
	8	70	6	64
	9	75	7	68
	10	70	6	64
Average		72	6	66
Tolerance		58	5	53
± 20%		86	8	79

Source Check Form

Instrument Configuration			
Instrument(Mfg/Mdl)	Ludlum 19	Serial #	144060
Probe(Mfg/Mdl)	Internal	Serial #	N/A
Cable Length	N/A	HV	N/A

Instrument Calibration					
Calibration Date	1/7/2013	Certificate #	N/A	Due	1/7/2014

Check Source					
Source Name	2m source #1	Serial #	2m source #1	Assay Date	N/A
Nuclide	Mixed	Half life	N/A	Activity	N/A

Detailed description of instrument and source positioning for daily check, and any other notes

On contact

Tolerances 5-8 58-86 53-79

Date	Project	Initials	Start /end	Batt	Bkgd Reading	Bkgd Units	Source Reading	Source Units	Source Ok?	Net Reading	Net Units	Net Ok?	Notes
11/1/2013	NFSS	PA	Start	ok	6	uR/h	60	uR/h	Ok	54	uR/h	Ok	
11/4/2013	NFSS	PA	Start	ok	6	uR/h	70	uR/h	Ok	64	uR/h	Ok	
11/5/2013	NFSS	PA	Start	ok	6	uR/h	65	uR/h	Ok	59	uR/h	Ok	
11/6/2013	NFSS	PA	Start	ok	6	uR/h	65	uR/h	Ok	59	uR/h	Ok	
11/6/2013	NFSS	ARJ	End	ok	6	uR/h	80	uR/h	Ok	74	uR/h	Ok	
11/7/2013	NFSS	PA	Start	ok	6	uR/h	70	uR/h	Ok	64	uR/h	Ok	
11/8/2013	NFSS	PA	Start	ok	6	uR/h	75	uR/h	Ok	69	uR/h	Ok	
11/8/2013	NFSS	PA	End	ok	6	uR/h	70	uR/h	Ok	64	uR/h	Ok	
11/11/2013	NFSS	PA	Start	ok	6	uR/h	65	uR/h	Ok	59	uR/h	Ok	
11/11/2013	NFSS	PA	End	ok	7	uR/h	65	uR/h	Ok	58	uR/h	Ok	
11/12/2013	NFSS	PA	Start	ok	6	uR/h	70	uR/h	Ok	64	uR/h	Ok	
11/12/2013	NFSS	PA	End	ok	7	uR/h	60	uR/h	Ok	53	uR/h	Ok	
11/13/2013	NFSS	PA	Start	ok	7	uR/h	75	uR/h	Ok	68	uR/h	Ok	
11/13/2013	NFSS	PA	End	ok	6	uR/h	60	uR/h	Ok	54	uR/h	Ok	
11/14/2013	NFSS	PA	Start	ok	6	uR/h	65	uR/h	Ok	59	uR/h	Ok	
11/14/2013	NFSS	PA	End	ok	5	uR/h	70	uR/h	Ok	65	uR/h	Ok	
11/15/2013	NFSS	PA	Start	ok	6	uR/h	60	uR/h	Ok	54	uR/h	Ok	
11/15/2013	NFSS	PA	End	ok	6	uR/h	60	uR/h	Ok	54	uR/h	Ok	
11/18/2013	NFSS	PA	Start	ok	7	uR/h	65	uR/h	Ok	58	uR/h	Ok	
11/18/2013	NFSS	PA	End	ok	5	uR/h	70	uR/h	Ok	65	uR/h	Ok	
11/19/2013	NFSS	PA	Start	ok	6	uR/h	75	uR/h	Ok	69	uR/h	Ok	
11/19/2013	NFSS	PA	End	ok	6	uR/h	60	uR/h	Ok	54	uR/h	Ok	
11/20/2013	NFSS	PA	Start	ok	6	uR/h	70	uR/h	Ok	64	uR/h	Ok	
11/20/2013	NFSS	ML	End	ok	6	uR/h	65	uR/h	Ok	59	uR/h	Ok	
11/21/2013	NFSS	PA	Start	ok	5	uR/h	70	uR/h	Ok	65	uR/h	Ok	
11/21/2013	NFSS	PA	End	ok	7	uR/h	70	uR/h	Ok	63	uR/h	Ok	
11/22/2013	NFSS	PA	Start	ok	7	uR/h	65	uR/h	Ok	58	uR/h	Ok	
11/22/2013	NFSS	PA	End	ok	6	uR/h	60	uR/h	Ok	54	uR/h	Ok	

Source Check Form

Instrument Configuration			
Instrument(Mfg/Mdl)	Ludlum 19	Serial #	144060
Probe(Mfg/Mdl)	Internal	Serial #	N/A
Cable Length	N/A	HV	N/A

Instrument Calibration					
Calibration Date	1/7/2013	Certificate #	N/A	Due	1/7/2014

Check Source					
Source Name	2m source #1	Serial #	2m source #1	Assay Date	N/A
Nuclide	Mixed	Half life	N/A	Activity	N/A

Detailed description of instrument and source positioning for daily check, and any other notes

On contact

Tolerances 5-8 58-86 53-79

Date	Project	Initials	Start /end	Batt	Bkgd Reading	Bkgd Units	Source Reading	Source Units	Source Ok?	Net Reading	Net Units	Net Ok?	Notes
11/25/2013	NFSS	PA	Start	ok	5	uR/h	70	uR/h	Ok	65	uR/h	Ok	
11/25/2013	NFSS	PA	End	ok	5	uR/h	70	uR/h	Ok	65	uR/h	Ok	
11/26/2013	NFSS	PA	Start	ok	6	uR/h	70	uR/h	Ok	64	uR/h	Ok	
11/26/2013	NFSS	PA	End	ok	7	uR/h	60	uR/h	Ok	53	uR/h	Ok	
11/27/2013	NFSS	PA	Start	ok	5	uR/h	60	uR/h	Ok	55	uR/h	Ok	
11/27/2013	NFSS	PA	End	ok	5	uR/h	65	uR/h	Ok	60	uR/h	Ok	
12/2/2013	NFSS	PA	Start	ok	6	uR/h	60	uR/h	Ok	54	uR/h	Ok	
12/2/2013	NFSS	PA	End	ok	6	uR/h	70	uR/h	Ok	64	uR/h	Ok	
12/3/2013	NFSS	PA	Start	ok	7	uR/h	65	uR/h	Ok	58	uR/h	Ok	
12/3/2013	NFSS	ML	End	ok	7	uR/h	60	uR/h	Ok	53	uR/h	Ok	
12/4/2013	NFSS	PA	Start	ok	7	uR/h	70	uR/h	Ok	63	uR/h	Ok	
12/4/2013	NFSS	ML	End	ok	6	uR/h	60	uR/h	Ok	54	uR/h	Ok	
12/5/2013	NFSS	PA	Start	ok	5	uR/h	60	uR/h	Ok	55	uR/h	Ok	
12/5/2013	NFSS	ML	End	ok	7	uR/h	70	uR/h	Ok	63	uR/h	Ok	
12/6/2013	NFSS	PA	Start	ok	5	uR/h	70	uR/h	Ok	65	uR/h	Ok	
12/6/2013	NFSS	PA	End	ok	6	uR/h	65	uR/h	Ok	59	uR/h	Ok	
12/9/2013	NFSS	PA	Start	ok	6	uR/h	70	uR/h	Ok	64	uR/h	Ok	
12/9/2013	NFSS	PA	End	ok	7	uR/h	65	uR/h	Ok	58	uR/h	Ok	
12/10/2013	NFSS	PA	Start	ok	6	uR/h	60	uR/h	Ok	54	uR/h	Ok	
12/10/2013	NFSS	PA	End	ok	6	uR/h	70	uR/h	Ok	64	uR/h	Ok	
12/11/2013	NFSS	PA	Start	ok	5	uR/h	60	uR/h	Ok	55	uR/h	Ok	
12/11/2013	NFSS	PA	End	ok	7	uR/h	70	uR/h	Ok	63	uR/h	Ok	
12/12/2013	NFSS	PA	Start	ok	6	uR/h	65	uR/h	Ok	59	uR/h	Ok	
12/12/2013	NFSS	PA	End	ok	5	uR/h	70	uR/h	Ok	65	uR/h	Ok	
12/13/2013	NFSS	PA	Start	ok	5	uR/h	60	uR/h	Ok	55	uR/h	Ok	
12/13/2013	NFSS	PA	End	ok	5	uR/h	60	uR/h	Ok	55	uR/h	Ok	
12/16/2013	NFSS	PA	Start	ok	6	uR/h	65	uR/h	Ok	59	uR/h	Ok	
12/16/2013	NFSS	PA	End	ok	5	uR/h	70	uR/h	Ok	65	uR/h	Ok	

Source Check Form

Instrument Configuration			
Instrument(Mfg/Mdl)	Ludlum 19	Serial #	144060
Probe(Mfg/Mdl)	Internal	Serial #	N/A
Cable Length	N/A	HV	N/A

Instrument Calibration					
Calibration Date	1/7/2013	Certificate #	N/A	Due	1/7/2014

Check Source					
Source Name	2m source #1	Serial #	2m source #1	Assay Date	N/A
Nuclide	Mixed	Half life	N/A	Activity	N/A

Detailed description of instrument and source positioning for daily check, and any other notes

On contact

Tolerances 5-8 58-86 53-79

Date	Project	Initials	Start /end	Batt	Bkgd Reading	Bkgd Units	Source Reading	Source Units	Source Ok?	Net Reading	Net Units	Net Ok?	Notes
12/17/2013	NFSS	PA	Start	ok	5	uR/h	60	uR/h	Ok	55	uR/h	Ok	
12/17/2013	NFSS	PA	End	ok	5	uR/h	65	uR/h	Ok	60	uR/h	Ok	
12/18/2013	NFSS	PA	Start	ok	5	uR/h	70	uR/h	Ok	65	uR/h	Ok	
12/18/2013	NFSS	PA	End	ok	5	uR/h	65	uR/h	Ok	60	uR/h	Ok	
12/19/2013	NFSS	PA	Start	ok	5	uR/h	60	uR/h	Ok	55	uR/h	Ok	
12/19/2013	NFSS	PA	End	ok	5	uR/h	65	uR/h	Ok	60	uR/h	Ok	

Source Check Form

Instrument Configuration			
Instrument(Mfg/Mdl)	Ludlum Model 2221	Serial #	138368
Probe(Mfg/Mdl)	Ludlum 44-10	Serial #	154615
Cable Length	5 ft cable curley	HV	1100

Calibration					
Calibration Date	6/11/2014	Certificate #	NA	Due	6/11/2015

Check Source						
Source Name	yellow	Serial #	N/A	Assay Date	N/A	
Nuclide	Mixed	Half life	N/A	Activity	N/A	

Detailed description of instrument and source positioning for daily check, and any other notes

Initial QC Set Up						
Source				Bkdg		Net
	1	58263		4679		53584
	2	57572		4859		52713
	3	57931		4725		53206
	4	57637		4998		52639
	5	57795		4856		52939
	6	58023		4651		53372
	7	57640		4944		52696
	8	57279		4880		52399
	9	57507		4837		52670
	10	57937		4836		53101
Average		57758		4827		52932
Tolerance		46207		3861		42346
± 20%		69310		5792		63518

Source Check Form

Instrument Configuration			
Instrument(Mfg/Mdl)	Ludlum Model 2221	Serial #	138368
Probe(Mfg/Mdl)	Ludlum 44-10	Serial #	154615
Cable Length	5 ft cable curley	HV	1100

Calibration					
Calibration Date	6/11/2014	Certificate #	NA	Due	6/11/2015

Check Source						
Source Name	yellow	Serial #	N/A	Assay Date	N/A	
Nuclide	Mixed	Half life	N/A	Activity	N/A	

Detailed description of instrument and source positioning for daily check, and any other notes

Date	Project	Initials	Start /end	Batt	Bkgd Reading	Bkgd Units	Source Reading	Source Units	Source Ok?	Net Reading	Net Units	Net Ok?	Notes
6/19/2014	NFSS	ARJ	Start	5.4	4876	cpm	57718	cpm	Ok	52842	cpm	Ok	Initial Shipment check
6/19/2014	NFSS	ARJ	End	5.5	4947	cpm	53658	cpm	Ok	48711	cpm	Ok	
6/20/2014	NFSS	KG	Start	5.5	5250	cpm	57052	cpm	Ok	51802	cpm	Ok	
6/20/2014	NFSS	KG	End	5.4	4720	cpm	55340	cpm	Ok	50620	cpm	Ok	
6/23/2014	NFSS	KG	Start	5.4	5212	cpm	52919	cpm	Ok	47707	cpm	Ok	
6/23/2014	NFSS	KG	End	5.5	5186	cpm	56109	cpm	Ok	50923	cpm	Ok	
6/24/2014	NFSS	KG	Start	5.4	5182	cpm	55444	cpm	Ok	50262	cpm	Ok	
6/24/2014	NFSS	KG	End	5.4	4633	cpm	55017	cpm	Ok	50384	cpm	Ok	
6/25/2014	NFSS	KG	Start	5.4	5005	cpm	56471	cpm	Ok	51466	cpm	Ok	
6/25/2014	NFSS	KG	End	5.4	4663	cpm	55247	cpm	Ok	50584	cpm	Ok	
6/26/2014	NFSS	KG	Start	5.2	4767	cpm	55757	cpm	Ok	50990	cpm	Ok	
6/26/2014	NFSS	KG	End	5.3	6042	cpm	54009	cpm	Ok	47967	cpm	Ok	
6/27/2014	NFSS	KG	Start	5.3	5628	cpm	56133	cpm	Ok	50505	cpm	Ok	
6/27/2014	NFSS	KG	End	5.3	4778	cpm	56740	cpm	Ok	51962	cpm	Ok	
6/30/2014	NFSS	KG	Start	5.4	5042	cpm	56590	cpm	Ok	51548	cpm	Ok	
6/30/2014	NFSS	KG	End	5.2	4977	cpm	52685	cpm	Ok	47708	cpm	Ok	
7/1/2014	NFSS	KG	Start	5.3	4997	cpm	52480	cpm	Ok	47483	cpm	Ok	
7/1/2014	NFSS	KG	End	5.1	4823	cpm	51706	cpm	Ok	46883	cpm	Ok	
7/2/2014	NFSS	KG	Start	5	4963	cpm	56644	cpm	Ok	51681	cpm	Ok	
7/2/2014	NFSS	KG	End	5.1	5065	cpm	54211	cpm	Ok	49146	cpm	Ok	
7/7/2014	NFSS	KG	Start	5.2	6399	cpm	54835	cpm	Ok	48436	cpm	Ok	
7/7/2014	NFSS	KG	End	5.1	6138	cpm	53361	cpm	Ok	47223	cpm	Ok	

Source Check Form

Instrument Configuration			
Instrument(Mfg/Mdl)	Ludlum Model 2221	Serial #	138377
Probe(Mfg/Mdl)	Ludlum 44-10 w/ Shield	Serial #	198936
Cable Length	15 ft cable	HV	1150

Calibration					
Calibration Date	10/7/2013	Certificate #	NA	Due	10/7/2014

Check Source						
Source Name	2m source #1	Serial #	2m source #1	Assay Date	N/A	
Nuclide	Mixed	Half life	N/A	Activity	N/A	

Detailed description of instrument and source positioning for daily check, and any other notes
Window is out set at3820, Threshold is 100
Use 4" cup to position source away from detector.

Initial QC Set Up						
Source				Bkdg		Net
	1	4859		1612		3247
	2	4608		1770		2838
	3	4867		1697		3170
	4	4486		1771		2715
	5	4572		1692		2880
	6	4507		1704		2803
	7	4574		1840		2734
	8	4644		1719		2925
	9	4450		1568		2882
	10	4760		1846		2914
Average		4633		1722		2911
Tolerance		3706		1378		2329
± 20%		5559		2066		3493

Source Check Form

Instrument Configuration			
Instrument(Mfg/Mdl)	Ludlum Model 2221	Serial #	138377
Probe(Mfg/Mdl)	Ludlum 44-10 w/ Shield	Serial #	198936
Cable Length	15 ft cable	HV	1150

Calibration					
Calibration Date	10/7/2013	Certificate #	NA	Due	10/7/2014

Check Source						
Source Name	2m source #1	Serial #	2m source #1	Assay Date	N/A	
Nuclide	Mixed	Half life	N/A	Activity	N/A	

Detailed description of instrument and source positioning for daily check, and any other notes
Window is out set at3820, Threshold is 100
Use 4" cup to position source away from detector.

Tolerances

					1378-2066 Bkgd		3706-5559 Source			2329-3493 Net			
Date	Project	Initials	Start /end	Batt	Reading	Units	Reading	Units	Ok?	Reading	Units	Ok?	Notes
11/1/2013	NFSS	PA	start	5.5	1289	cpm	4515	cpm	Ok	3226	cpm	Ok	
11/4/2013	NFSS	PA	Start	5.5	1473	cpm	4891	cpm	Ok	3418	cpm	Ok	
11/5/2013	NFSS	PA	Start	5.5	1303	cpm	4606	cpm	Ok	3303	cpm	Ok	
11/6/2013	NFSS	PA	Start	5.5	1777	cpm	4677	cpm	Ok	2900	cpm	Ok	
11/7/2013	NFSS	PA	Start	5.5	1379	cpm	4583	cpm	Ok	3204	cpm	Ok	
11/8/2013	NFSS	PA	Start	5.5	1379	cpm	4606	cpm	Ok	3227	cpm	Ok	
11/11/2013	NFSS	PA	Start	5.6	1383	cpm	4807	cpm	Ok	3424	cpm	Ok	
11/12/2013	NFSS	PA	Start	5.5	1382	cpm	4486	cpm	Ok	3104	cpm	Ok	
11/13/2013	NFSS	PA	Start	0.5	1417	cpm	4714	cpm	Ok	3297	cpm	Ok	
11/14/2013	NFSS	PA	Start	5.5	1381	cpm	4655	cpm	Ok	3274	cpm	Ok	
11/15/2013	NFSS	PA	Start	5.5	1766	cpm	4678	cpm	Ok	2912	cpm	Ok	
11/18/2013	NFSS	PA	Start	5.5	1394	cpm	4838	cpm	Ok	3444	cpm	Ok	
11/19/2013	NFSS	PA	Start	5.5	1334	cpm	4565	cpm	Ok	3231	cpm	Ok	
11/20/2013	NFSS	PA	Start	5.5	1402	cpm	4598	cpm	Ok	3196	cpm	Ok	
11/21/2013	NFSS	PA	Start	5.4	1550	cpm	4746	cpm	Ok	3196	cpm	Ok	
11/22/2013	NFSS	PA	start	5.4	1566	cpm	4760	cpm	Ok	3194	cpm	Ok	
11/25/2013	NFSS	PA	start	5.5	1444	cpm	4531	cpm	Ok	3087	cpm	Ok	
11/25/2013	NFSS	PA	end	5.4	1501	cpm	4216	cpm	Ok	2715	cpm	Ok	
11/26/2013	NFSS	PA	start	5.5	1532	cpm	4682	cpm	Ok	3150	cpm	Ok	
11/26/2013	NFSS	PA	end	5.5	1589	cpm	4718	cpm	Ok	3129	cpm	Ok	
11/27/2013	NFSS	PA	start	5.5	1317	cpm	4466	cpm	Ok	3149	cpm	Ok	
12/2/2013	NFSS	PA	start	5.5	1429	cpm	4687	cpm	Ok	3258	cpm	Ok	
12/2/2013	NFSS	PA	end	5.5	1370	cpm	4797	cpm	Ok	3427	cpm	Ok	
12/3/2013	NFSS	PA	start	5.5	1365	cpm	4570	cpm	Ok	3205	cpm	Ok	
12/3/2013	NFSS	ML	end	5.4	1344	cpm	4267	cpm	Ok	2923	cpm	Ok	
12/4/2013	NFSS	PA	start	5.5	1415	cpm	4646	cpm	Ok	3231	cpm	Ok	
12/4/2013	NFSS	ML	end	5.4	1438	cpm	4301	cpm	Ok	2863	cpm	Ok	
12/5/2013	NFSS	PA	start	5.4	1459	cpm	4461	cpm	Ok	3002	cpm	Ok	

Source Check Form

Instrument Configuration			
Instrument(Mfg/Mdl)	Ludlum Model 2221	Serial #	144863
Probe(Mfg/Mdl)	Ludlum 44-9 Pancake	Serial #	37047
Cable Length	39" cable	HV	900

Calibration					
Calibration Date	10/21/2013	Certificate #	17854A	Due	10/21/2014

Check Source Gamma					
Source Name	1M#2	Serial #	N/A	Assay Date	N/A
Nuclide	mixed	Half life	N/A	Activity	N/A

Check Source Tc-99 #1					
Source Name	Beta Source	Serial #	7181-11	Assay Date	3/7/2011
Nuclide	Tc-99	Half life	211000 years	Activity	13700 dpm

Check Source Tc-99 #2					
Source Name	Beta Source	Serial #	99tc220 3927	Assay Date	12/14/1999
Nuclide	Tc-99	Half life	211000 years	Activity	9240 dpm

Detailed description of instrument and source positioning for daily check, and any other notes

Initial QC Set Up Tc-99 #1				
	Source	Bkdg	Net
1	1726	43	1683
2	1786	49	1737
3	1677	48	1629
4	1671	38	1633
5	1675	45	1630
6	1599	34	1565
7	1647	45	1602
8	1825	46	1779
9	1636	56	1580
10	1690	43	1647
Average	1693	45	1649
Tolerance	1355	36	1319
± 20%	2032	54	1978

Initial QC Set Up Tc-99 #2			
	Source	Bkdg	Net
1	1488	48	1440
2	1551	53	1498
3	1529	53	1476
4	1563	58	1505
5	1505	56	1449
6	1541	41	1500
7	1498	44	1454
8	1563	64	1499
9	1616	50	1566
10	1415	54	1361
Average	1527	52	1475
Tolerance	1222	42	1180
± 20%	1832	63	1770

Source Check Form

Instrument Configuration			
Instrument(Mfg/Mdl)	Ludlum Model 2221	Serial #	144863
Probe(Mfg/Mdl)	Ludlum 44-9 Pancake	Serial #	37047
Cable Length	39" cable	HV	900

Calibration					
Calibration Date	10/21/2013	Certificate #	17854A	Due	10/21/2014

Check Source Tc-99 #1					
Source Name	Beta Source	Serial #	7181-11	Assay Date	3/7/2011
Nuclide	Tc-99	Half life	211000 years	Activity	13700 dpm

Check Source Tc-99 #2					
Source Name	Beta Source	Serial #	99tc220 3927	Assay Date	12/14/1999
Nuclide	Tc-99	Half life	211000 years	Activity	9240 dpm

Detailed description of instrument and source positioning for daily check, and any other notes

					Bkgd		Source			Net			
Date	Project	Initials	Start /end	Batt	Reading	Units	Reading	Units	Ok?	Reading	Units	Ok?	Notes
11/1/2013	NFSS	PA	start	5.6	43	cpm	9001	cpm	Ok	8958	cpm	Ok	
11/4/2013	NFSS	ARJ/PA	start	6	41	cpm	1690	cpm	Ok	1649	cpm	Ok	
11/6/2013	NFSS	PA	Start	5.9	44	cpm	1726	cpm	Ok	1682	cpm	Ok	
11/7/2013	NFSS	PA	Start	5.9	41	cpm	1786	cpm	Ok	1745	cpm	Ok	
11/8/2013	NFSS	PA	Start	5.9	36	cpm	1677	cpm	Ok	1641	cpm	Ok	
11/11/2013	NFSS	PA	Start	5.6	36	cpm	1671	cpm	Ok	1635	cpm	Ok	
11/12/2013	NFSS	PA	Start	5.9	31	cpm	1675	cpm	Ok	1644	cpm	Ok	
11/13/2013	NFSS	PA	Start	5.9	33	cpm	1599	cpm	Ok	1566	cpm	Ok	
11/14/2013	NFSS	PA	Start	5.9	38	cpm	1647	cpm	Ok	1609	cpm	Ok	
11/15/2013	NFSS	PA	Start	5.9	37	cpm	1825	cpm	Ok	1788	cpm	Ok	
11/18/2013	NFSS	PA	Start	5.8	42	cpm	1636	cpm	Ok	1594	cpm	Ok	
11/19/2013	NFSS	PA	Start	5.8	30	cpm	1725	cpm	Ok	1695	cpm	Ok	

Source Check Form

Instrument Configuration			
Instrument(Mfg/Mdl)	Ludlum Model 2221	Serial #	144863
Probe(Mfg/Mdl)	Ludlum 44-9 Pancake	Serial #	37047
Cable Length	39" cable	HV	900

Calibration					
Calibration Date	10/21/2013	Certificate #	17854A	Due	10/21/2014

Check Source Tc-99 #1					
Source Name	Beta Source	Serial #	7181-11	Assay Date	3/7/2011
Nuclide	Tc-99	Half life	211000 years	Activity	13700 dpm

Check Source Tc-99 #2					
Source Name	Beta Source	Serial #	99tc220 3927	Assay Date	12/14/1999
Nuclide	Tc-99	Half life	211000 years	Activity	9240 dpm

Tc-99#2														
6/11/2014	NFSS	ARJ	Start	5.5	60	cpm	1542	cpm	Ok	1482	cpm	Ok	PreShipment check
6/16/2014	NFSS	KG	Start	5.6	56	cpm	1591	cpm	Ok	1535	cpm	Ok	
6/17/2014	NFSS	KG	Start	5.6	37	cpm	1528	cpm	Ok	1491	cpm	Ok	
6/17/2014	NFSS	KG	End	5.5	35	cpm	1561	cpm	Ok	1526	cpm	Ok	
6/18/2014	NFSS	KG	Start	5.6	35	cpm	1515	cpm	Ok	1480	cpm	Ok	
6/18/2014	NFSS	KG	End	5.5	37	cpm	1584	cpm	Ok	1547	cpm	Ok	
6/19/2014	NFSS	KG	Start	5.6	30	cpm	1501	cpm	Ok	1471	cpm	Ok	
6/19/2014	NFSS	KG	End	5.5	39	cpm	1564	cpm	Ok	1525	cpm	Ok	
6/20/2014	NFSS	KG	Start	5.5	37	cpm	1593	cpm	Ok	1556	cpm	Ok	
6/20/2014	NFSS	KG	End	5.4	63	cpm	1543	cpm	Ok	1480	cpm	Ok	
6/23/2014	NFSS	KG	Start	5.4	41	cpm	1604	cpm	Ok	1563	cpm	Ok	
6/23/2014	NFSS	KG	End	5.5	40	cpm	1517	cpm	Ok	1477	cpm	Ok	
6/24/2014	NFSS	KG	Start	5.5	42	cpm	1466	cpm	Ok	1424	cpm	Ok	
6/24/2014	NFSS	KG	End	5.4	37	cpm	1521	cpm	Ok	1484	cpm	Ok	
6/25/2014	NFSS	KG	Start	5.5	39	cpm	1544	cpm	Ok	1505	cpm	Ok	
6/25/2014	NFSS	KG	End	5.4	38	cpm	1478	cpm	Ok	1440	cpm	Ok	
6/26/2014	NFSS	KG	Start	5.2	56	cpm	1551	cpm	Ok	1495	cpm	Ok	
6/26/2014	NFSS	KG	End	5.3	35	cpm	1486	cpm	Ok	1451	cpm	Ok	
6/27/2014	NFSS	KG	Start	5.3	49	cpm	1481	cpm	Ok	1432	cpm	Ok	
6/27/2014	NFSS	KG	End	5.3	35	cpm	1503	cpm	Ok	1468	cpm	Ok	
6/30/2014	NFSS	KG	Start	5.3	42	cpm	1470	cpm	Ok	1428	cpm	Ok	
6/30/2014	NFSS	KG	End	5.3	37	cpm	1517	cpm	Ok	1480	cpm	Ok	
7/1/2014	NFSS	KG	Start	5.3	34	cpm	1518	cpm	Ok	1484	cpm	Ok	
7/1/2014	NFSS	KG	End	5.2	45	cpm	1478	cpm	Ok	1433	cpm	Ok	
7/2/2014	NFSS	KG	Start	5.1	40	cpm	1436	cpm	Ok	1396	cpm	Ok	
7/2/2014	NFSS	KG	End	5	42	cpm	1499	cpm	Ok	1457	cpm	Ok	
7/7/2014	NFSS	KG	Start	5.1	56	cpm	1487	cpm	Ok	1431	cpm	Ok	
7/7/2014	NFSS	KG	End	5	45	cpm	1465	cpm	Ok	1420	cpm	Ok	

Source Check Form

Instrument Configuration			
Instrument(Mfg/Mdl)	Ludlum Model 2221	Serial #	147508
Probe(Mfg/Mdl)	Ludlum 44-10	Serial #	149451
Cable Length	5 ft cable	HV	1062

Calibration					
Calibration Date	10/28/2013	Certificate #	17844B	Due	10/28/2014

Check Source						
Source Name	yellow	Serial #	N/A	Assay Date	N/A	
Nuclide	Mixed	Half life	N/A	Activity	N/A	

Detailed description of instrument and source positioning for daily check, and any other notes

Window is out set at 3928, Threshold is 103
Set Up with GPS

Initial QC Set Up						
Source				Bkdg		Net
	1	60279		6244		54035
	2	60233		6361		53872
	3	60196		6396		53800
	4	60766		6366		54400
	5	59988		6341		53647
	6	59892		6466		53426
	7	60264		6492		53772
	8	60467		6298		54169
	9	60464		7153		53311
	10	60486		6438		54048
Average		60304		6456		53848
Tolerance		48243		5164		43078
± 20%		72364		7747		64618

Tolerances 5164-7747 48243-72364 43078-64618

Source Check Form

Instrument Configuration			
Instrument(Mfg/Mdl)	Ludlum Model 2221	Serial #	147508
Probe(Mfg/Mdl)	Ludlum 44-10	Serial #	149451
Cable Length	5 ft cable	HV	1062

Calibration					
Calibration Date	10/28/2013	Certificate #	17844B	Due	10/28/2014

Check Source						
Source Name	yellow	Serial #	N/A	Assay Date	N/A	
Nuclide	Mixed	Half life	N/A	Activity	N/A	

Detailed description of instrument and source positioning for daily check, and any other notes
Window is out set at 3928, Threshold is 103
Set Up with GPS

			Start		Bkgd		Source			Net			
Date	Project	Initials	/end	Batt	Reading	Units	Reading	Units	Ok?	Reading	Units	Ok?	Notes
10/31/2013	NFSS	PA/ARJ	End	5.7	6263	cpm	55417	cpm	Ok	49154	cpm	Ok	
11/1/2013	NFSS	PA	Start	5.8	5683	cpm	52714	cpm	Ok	47031	cpm	Ok	
11/1/2013	NFSS	PA	End	5.7	5724	cpm	51673	cpm	Ok	45949	cpm	Ok	
11/4/2013	NFSS	PA	Start	5.7	5424	cpm	53165	cpm	Ok	47741	cpm	Ok	
11/4/2013	NFSS	PA	End	5.6	5141	cpm	49591	cpm	Ok	44450	cpm	Ok	
11/5/2013	NFSS	PA	Start	5.6	5356	cpm	52702	cpm	Ok	47346	cpm	Ok	
11/5/2013	NFSS	ARJ	End	5.6	5542	cpm	53412	cpm	Ok	47870	cpm	Ok	
11/6/2013	NFSS	PA	Start	5.6	5329	cpm	49693	cpm	Ok	44364	cpm	Ok	
11/6/2013	NFSS	ARJ	End	5.4	5429	cpm	57068	cpm	Ok	51639	cpm	Ok	
11/7/2013	NFSS	PA	Start	5.5	5345	cpm	48923	cpm	Ok	43578	cpm	Ok	
11/7/2013	NFSS	ARJ	End	5.4	5398	cpm	55262	cpm	Ok	49864	cpm	Ok	
11/8/2013	NFSS	PA	Start	5.5	5395	cpm	49827	cpm	Ok	44432	cpm	Ok	
11/8/2013	NFSS	ARJ	End	5.3	5643	cpm	52030	cpm	Ok	46387	cpm	Ok	
11/11/2013	NFSS	PA	Start	5.5	5.04	cpm	52556	cpm	Ok	52551	cpm	Ok	
11/11/2013	NFSS	PA	End	5.4	6342	cpm	49856	cpm	Ok	43514	cpm	Ok	
11/12/2013	NFSS	PA	Start	5.4	5234	cpm	53533	cpm	Ok	48299	cpm	Ok	
11/12/2013	NFSS	PA	End	5.2	5972	cpm	58880	cpm	Ok	52908	cpm	Ok	
11/13/2013	NFSS	PA	Start	5.4	6281	cpm	54592	cpm	Ok	48311	cpm	Ok	
11/13/2013	NFSS	PA	End	5.1	5315	cpm	51067	cpm	Ok	45752	cpm	Ok	
11/14/2013	NFSS	PA	Start	5.3	5494	cpm	53435	cpm	Ok	47941	cpm	Ok	
11/14/2013	NFSS	PA	End	5.3	5178	cpm	51290	cpm	Ok	46112	cpm	Ok	
11/15/2013	NFSS	PA	Start	5.3	5367	cpm	48735	cpm	Ok	43368	cpm	Ok	
11/15/2013	NFSS	PA	End	5.1	5055	cpm	50474	cpm	Ok	45419	cpm	Ok	
11/18/2013	NFSS	PA	Start	5.3	5452	cpm	54347	cpm	Ok	48895	cpm	Ok	
11/18/2013	NFSS	PA	End	5.3	5171	cpm	50622	cpm	Ok	45451	cpm	Ok	
11/19/2013	NFSS	PA	Start	5.3	5141	cpm	48517	cpm	Ok	43376	cpm	Ok	
11/19/2013	NFSS	PA	End	5.2	5380	cpm	51089	cpm	Ok	45709	cpm	Ok	
11/20/2013	NFSS	PA	Start	5.3	5613	cpm	52431	cpm	Ok	46818	cpm	Ok	
11/20/2013	NFSS	PA	End	5.3	5391	cpm	48898	cpm	Ok	43507	cpm	Ok	
11/21/2013	NFSS	PA	Start	5.3	5484	cpm	52055	cpm	Ok	46571	cpm	Ok	
11/21/2013	NFSS	PA	End	5.3	5512	cpm	49898	cpm	Ok	44386	cpm	Ok	
11/22/2013	NFSS	PA	Start	5.3	5649	cpm	54587	cpm	Ok	48938	cpm	Ok	
11/22/2013	NFSS	PA	End	5.1	6054	cpm	58288	cpm	Ok	52234	cpm	Ok	
11/25/2013	NFSS	PA	Start	5.1	5878	cpm	51002	cpm	Ok	45124	cpm	Ok	
11/25/2013	NFSS	PA	End	5.1	5392	cpm	48552	cpm	Ok	43160	cpm	Ok	

Source Check Form

Instrument Configuration			
Instrument(Mfg/Mdl)	Ludlum Model 2221	Serial #	147508
Probe(Mfg/Mdl)	Ludlum 44-10	Serial #	149451
Cable Length	5 ft cable	HV	1062

Calibration					
Calibration Date	10/28/2013	Certificate #	17844B	Due	10/28/2014

Check Source						
Source Name	yellow	Serial #	N/A	Assay Date	N/A	
Nuclide	Mixed	Half life	N/A	Activity	N/A	

Detailed description of instrument and source positioning for daily check, and any other notes

Window is out set at 3928, Threshold is 103

Set Up with GPS

			Start		Bkgd		Source			Net			
11/26/2013	NFSS	PA	Start	5.7	6416	cpm	52963	cpm	Ok	46547	cpm	Ok	Batteries Changed
11/26/2013	NFSS	PA	End	5.5	6256	cpm	56684	cpm	Ok	50428	cpm	Ok	
11/27/2013	NFSS	PA	Start	5.5	6152	cpm	52285	cpm	Ok	46133	cpm	Ok	
11/27/2013	NFSS	PA	End	5.3	5886	cpm	56324	cpm	Ok	50438	cpm	Ok	
12/2/2013	NFSS	PA	Start	5.6	6577	cpm	56536	cpm	Ok	49959	cpm	Ok	
12/2/2013	NFSS	PA	End	5.5	6390	cpm	55287	cpm	Ok	48897	cpm	Ok	
12/3/2013	NFSS	PA	Start	5.5	6421	cpm	54467	cpm	Ok	48046	cpm	Ok	
12/3/2013	NFSS	PA	End	5.5	6942	cpm	51947	cpm	Ok	45005	cpm	Ok	
12/4/2013	NFSS	PA	Start	5.5	6682	cpm	57475	cpm	Ok	50793	cpm	Ok	
12/4/2013	NFSS	PA	End	5.3	7515	cpm	56108	cpm	Ok	48593	cpm	Ok	
12/5/2013	NFSS	PA	Start	5.4	6962	cpm	54176	cpm	Ok	47214	cpm	Ok	
12/5/2013	NFSS	PA	End	5.3	6836	cpm	54989	cpm	Ok	48153	cpm	Ok	
12/6/2013	NFSS	PA	Start	5.4	6120	cpm	55668	cpm	Ok	49548	cpm	Ok	
12/6/2013	NFSS	PA	End	5.3	6562	cpm	53028	cpm	Ok	46466	cpm	Ok	
12/9/2013	NFSS	PA	Start	5.4	5409	cpm	54964	cpm	Ok	49555	cpm	Ok	
12/9/2013	NFSS	PA	End	5.3	5574	cpm	53748	cpm	Ok	48174	cpm	Ok	
12/10/2013	NFSS	PA	Start	5.3	5571	cpm	54196	cpm	Ok	48625	cpm	Ok	
12/10/2013	NFSS	PA	End	5.1	4978	cpm	49394	cpm	Ok	44416	cpm	Ok	
12/11/2013	NFSS	PA	Start	5.2	5456	cpm	56456	cpm	Ok	51000	cpm	Ok	
12/11/2013	NFSS	PA	End	5.1	5387	cpm	54504	cpm	Ok	49117	cpm	Ok	
12/12/2013	NFSS	PA	Start	5.1	5488	cpm	51480	cpm	Ok	45992	cpm	Ok	
12/12/2013	NFSS	PA	End	5.3	5285	cpm	52881	cpm	Ok	47596	cpm	Ok	
12/13/2013	NFSS	PA	Start	5.3	5944	cpm	54487	cpm	Ok	48543	cpm	Ok	
12/16/2013	NFSS	PA	Start	5.3	5708	cpm	56935	cpm	Ok	51227	cpm	Ok	
12/17/2013	NFSS	PA	Start	5.4	6536	cpm	54686	cpm	Ok	48150	cpm	Ok	
12/18/2013	NFSS	PA	Start	5.4	5944	cpm	56550	cpm	Ok	50606	cpm	Ok	
12/19/2013	NFSS	PA	Start	5.4	5802	cpm	53940	cpm	Ok	48138	cpm	Ok	

Source Check Form

Instrument Configuration			
Instrument(Mfg/Mdl)	Ludlum Model 2221	Serial #	147508
Probe(Mfg/Mdl)	Ludlum 44-10	Serial #	149451
Cable Length	5 ft cable	HV	1062

Calibration					
Calibration Date	10/28/2013	Certificate #	17844B	Due	10/28/2014

Check Source						
Source Name	yellow	Serial #	N/A	Assay Date	N/A	
Nuclide	Mixed	Half life	N/A	Activity	N/A	

Detailed description of instrument and source positioning for daily check, and any other notes

Window is out set at 3928, Threshold is 103
Set Up with GPS

			Start		Bkgd		Source			Net			
6/11/2014	NFSS	ARJ	Start	5.5	7705	cpm	62842	cpm	Ok	55137	cpm	Ok	PreShipment check
6/11/2014	NFSS	ARJ	Start	5.5	7660	cpm	61972	cpm	Ok	54312	cpm	Ok	PreShipment check
6/16/2014	NFSS	KG	Start	5.2	5188	cpm	59104	cpm	Ok	53916	cpm	Ok	
6/17/2014	NFSS	KG	Start	5.2	5580	cpm	59065	cpm	Ok	53485	cpm	Ok	
6/17/2014	NFSS	KG	End	5.1	5279	cpm	60463	cpm	Ok	55184	cpm	Ok	
6/18/2014	NFSS	KG	Start	4.9	5170	cpm	62604	cpm	Ok	57434	cpm	Ok	
6/18/2014	NFSS	KG	End	4.8	5356	cpm	59915	cpm	Ok	54559	cpm	Ok	
6/19/2014	NFSS	KG	Start	5	5404	cpm	52915	cpm	Ok	47511	cpm	Ok	
6/19/2014	NFSS	KG	End	4.7	5217	cpm	60108	cpm	Ok	54891	cpm	Ok	
6/20/2014	NFSS	KG	Start	4.6	5454	cpm	58507	cpm	Ok	53053	cpm	Ok	
6/20/2014	NFSS	KG	End	4.6	5330	cpm	56046	cpm	Ok	50716	cpm	Ok	
6/23/2014	NFSS	KG	Start	6	5269	cpm	58885	cpm	Ok	53616	cpm	Ok	new batteries
6/23/2014	NFSS	KG	End	6.4	5396	cpm	60124	cpm	Ok	54728	cpm	Ok	
6/24/2014	NFSS	KG	Start	6.4	5703	cpm	58697	cpm	Ok	52994	cpm	Ok	
6/24/2014	NFSS	KG	End	6	5785	cpm	55481	cpm	Ok	49696	cpm	Ok	
6/25/2014	NFSS	KG	Start	6.1	5965	cpm	56886	cpm	Ok	50921	cpm	Ok	
6/25/2014	NFSS	KG	End	6	5393	cpm	56479	cpm	Ok	51086	cpm	Ok	
6/26/2014	NFSS	KG	Start	6	6036	cpm	55928	cpm	Ok	49892	cpm	Ok	
6/26/2014	NFSS	KG	End	6.1	5490	cpm	56769	cpm	Ok	51279	cpm	Ok	
6/27/2014	NFSS	KG	Start	6	5712	cpm	57689	cpm	Ok	51977	cpm	Ok	
6/27/2014	NFSS	KG	End	5.6	5465	cpm	57163	cpm	Ok	51698	cpm	Ok	
6/30/2114	NFSS	KG	Start	5.8	5411	cpm	56976	cpm	Ok	51565	cpm	Ok	
6/30/2014	NFSS	KG	End	5.8	5926	cpm	56231	cpm	Ok	50305	cpm	Ok	
7/1/2014	NFSS	KG	Start	5.7	5522	cpm	53470	cpm	Ok	47948	cpm	Ok	
7/1/2014	NFSS	KG	End	5.6	5562	cpm	54685	cpm	Ok	49123	cpm	Ok	
7/2/2014	NFSS	KG	Start	5.6	5486	cpm	57059	cpm	Ok	51573	cpm	Ok	
7/2/2014	NFSS	KG	End	5.5	5413	cpm	53568	cpm	Ok	48155	cpm	Ok	
7/7/2014	NFSS	KG	Start	5.6	6951	cpm	56225	cpm	Ok	49274	cpm	Ok	
7/7/2014	NFSS	KG	End	5.5	5574	cpm	53361	cpm	Ok	47787	cpm	Ok	

Source Check Form

Instrument Configuration			
Instrument(Mfg/Mdl)	Ludlum Model 2221	Serial #	148443
Probe(Mfg/Mdl)	Ludlum 44-10	Serial #	150422
Cable Length	5 ft cable	HV	899

Calibration					
Calibration Date	10/28/2013	Certificate #	17843B	Due	10/28/2013

Check Source						
Source Name	yellow	Serial #	N/A	Assay Date	N/A	
Nuclide	Mixed	Half life	N/A	Activity	N/A	

Detailed description of instrument and source positioning for daily check, and any other notes

Window is out set at 3611, Threshold is 99

Initial QC Set Up						
Source				Bkdg		Net
	1	58175		6262		51913
	2	58609		6364		52245
	3	58580		6743		51837
	4	58602		6363		52239
	5	58820		6408		52412
	6	58128		6375		51753
	7	59002		6384		52618
	8	58536		6278		52258
	9	58267		6812		51455
	10	59095		6770		52325
Average		58581		6476		52106
Tolerance		46865		5181		41684
± 20%		70298		7771		62527

Source Check Form

Instrument Configuration			
Instrument(Mfg/Mdl)	Ludlum Model 2221	Serial #	148443
Probe(Mfg/Mdl)	Ludlum 44-10	Serial #	150422
Cable Length	5 ft cable	HV	899

Calibration					
Calibration Date	10/28/2013	Certificate #	17843B	Due	10/28/2013

Check Source						
Source Name	yellow	Serial #	N/A	Assay Date	N/A	
Nuclide	Mixed	Half life	N/A	Activity	N/A	

Detailed description of instrument and source positioning for daily check, and any other notes

Window is out set at 3611, Threshold is 99

Tolerances					5181-7771		46865-70298			41684-62527			
			Start		Bkgd		Source			Net			
Date	Project	Initials	/end	Batt	Reading	Units	Reading	Units	Ok?	Reading	Units	Ok?	Notes
						cpm		cpm			cpm	Fail	
11/1/2013	NFSS	PA	start	5.7	4685	cpm	50765	cpm	Ok	46080	cpm	Ok	
11/4/2013	NFSS	PA	Start	5.8	5666	cpm	53353	cpm	Ok	47687	cpm	Ok	
11/5/2013	NFSS	PA	Start	5.7	5236	cpm	50409	cpm	Ok	45173	cpm	Ok	
11/5/2013	NFSS	ARJ	End	5.7	6934	cpm	51646	cpm	Ok	44712	cpm	Ok	
11/6/2013	NFSS	PA	Start	5.7	6444	cpm	52061	cpm	Ok	45617	cpm	Ok	
11/6/2013	NFSS	ARJ	End	5.6	6325	cpm	51185	cpm	Ok	44860	cpm	Ok	
11/7/2013	NFSS	PA	Start	5.6	5681	cpm	53180	cpm	Ok	47499	cpm	Ok	
11/7/2013	NFSS	PA	End	5.5	6510	cpm	53116	cpm	Ok	46606	cpm	Ok	
11/8/2013	NFSS	PA	Start	5.6	5806	cpm	52101	cpm	Ok	46295	cpm	Ok	
11/8/2013	NFSS	PA	End	5.5	6052	cpm	53796	cpm	Ok	47744	cpm	Ok	
11/11/2013	NFSS	PA	Start	5.6	5191	cpm	53308	cpm	Ok	48117	cpm	Ok	
11/11/2013	NFSS	PA	End	5.4	7531	cpm	53298	cpm	Ok	45767	cpm	Ok	
11/12/2013	NFSS	PA	Start	5.5	5234	cpm	53533	cpm	Ok	48299	cpm	Ok	
11/12/2013	NFSS	PA	End	5.4	5625	cpm	48876	cpm	Ok	43251	cpm	Ok	
11/13/2013	NFSS	PA	Start	5.5	5972	cpm	52948	cpm	Ok	46976	cpm	Ok	
11/13/2013	NFSS	PA	End	5.4	5808	cpm	54562	cpm	Ok	48754	cpm	Ok	
11/14/2013	NFSS	PA	Start	5.5	5383	cpm	54289	cpm	Ok	48906	cpm	Ok	
11/14/2013	NFSS	PA	End	5.3	5917	cpm	51708	cpm	Ok	45791	cpm	Ok	
11/15/2013	NFSS	PA	Start	5.4	5737	cpm	52587	cpm	Ok	46850	cpm	Ok	
11/15/2013	NFSS	PA	End	5.4	6196	cpm	48780	cpm	Ok	42584	cpm	Ok	
11/18/2013	NFSS	PA	Start	5.5	6522	cpm	53999	cpm	Ok	47477	cpm	Ok	
11/18/2013	NFSS	PA	End	5.3	6234	cpm	51751	cpm	Ok	45517	cpm	Ok	
11/19/2013	NFSS	PA	Start	5.4	6629	cpm	52345	cpm	Ok	45716	cpm	Ok	
11/19/2013	NFSS	PA	End	5.3	6766	cpm	52622	cpm	Ok	45856	cpm	Ok	
11/20/2013	NFSS	PA	Start	5.4	6669	cpm	48615	cpm	Ok	41946	cpm	Ok	
11/20/2013	NFSS	PA	End	5.4	5609	cpm	53317	cpm	Ok	47708	cpm	Ok	
11/21/2013	NFSS	PA	Start	5.4	5958	cpm	54851	cpm	Ok	48893	cpm	Ok	
11/21/2013	NFSS	PA	End	5.3	6001	cpm	48469	cpm	Ok	42468	cpm	Ok	
11/22/2013	NFSS	PA	Start	5.3	6530	cpm	54521	cpm	Ok	47991	cpm	Ok	
11/25/2013	NFSS	PA	Start	5.4	5798	cpm	51799	cpm	Ok	46001	cpm	Ok	
11/25/2013	NFSS	PA	End	5.4	6604	cpm	53089	cpm	Ok	46485	cpm	Ok	
11/26/2013	NFSS	PA	Start	5.8	6313	cpm	53562	cpm	Ok	47249	cpm	Ok	Batteries Changed

Source Check Form

Instrument Configuration			
Instrument(Mfg/Mdl)	Ludlum Model 2221	Serial #	148443
Probe(Mfg/Mdl)	Ludlum 44-10	Serial #	150422
Cable Length	5 ft cable	HV	899

Calibration					
Calibration Date	10/28/2013	Certificate #	17843B	Due	10/28/2013

Check Source						
Source Name	yellow	Serial #	N/A	Assay Date	N/A	
Nuclide	Mixed	Half life	N/A	Activity	N/A	

Detailed description of instrument and source positioning for daily check, and any other notes

Window is out set at 3611, Threshold is 99

Tolerances					5181-7771		46865-70298			41684-62527			
			Start		Bkgd		Source			Net			
11/26/2013	NFSS	PA	End	5.4	5781	cpm	52025	cpm	Ok	46244	cpm	Ok	
11/27/2013	NFSS	PA	Start	5.5	6165	cpm	54393	cpm	Ok	48228	cpm	Ok	
11/27/2013	NFSS	PA	End	5.5	5882	cpm	54404	cpm	Ok	48522	cpm	Ok	
12/2/2013	NFSS	PA	Start	5.5	5622	cpm	50683	cpm	Ok	45061	cpm	Ok	
12/2/2013	NFSS	PA	End	5.5	5118	cpm	51674	cpm	Ok	46556	cpm	Ok	
12/3/2013	NFSS	PA	Start	5.5	5273	cpm	49784	cpm	Ok	44511	cpm	Ok	
12/3/2013	NFSS	ML	End	5.4	6009	cpm	53275	cpm	Ok	47266	cpm	Ok	
12/4/2013	NFSS	PA	Start	5.4	6219	cpm	53609	cpm	Ok	47390	cpm	Ok	
12/4/2013	NFSS	PA	End	5.4	6419	cpm	55874	cpm	Ok	49455	cpm	Ok	
12/5/2013	NFSS	PA	Start	5.4	6260	cpm	52197	cpm	Ok	45937	cpm	Ok	
12/5/2013	NFSS	ML	End	5.4	7373	cpm	51358	cpm	Ok	43985	cpm	Ok	
12/6/2013	NFSS	PA	Start	5.4	6035	cpm	53944	cpm	Ok	47909	cpm	Ok	
12/9/2013	NFSS	PA	Start	5.4	6135	cpm	49694	cpm	Ok	43559	cpm	Ok	
12/9/2013	NFSS	PA	End	5.3	6802	cpm	55107	cpm	Ok	48305	cpm	Ok	
12/10/2013	NFSS	PA	Start	5.3	5932	cpm	52057	cpm	Ok	46125	cpm	Ok	
12/10/2013	NFSS	PA	End	5.2	7604	cpm	54447	cpm	Ok	46843	cpm	Ok	
12/11/2013	NFSS	PA	Start	5.3	6046	cpm	54796	cpm	Ok	48750	cpm	Ok	
12/11/2013	NFSS	PA	End	5.1	5294	cpm	57551	cpm	Ok	52257	cpm	Ok	
12/12/2013	NFSS	PA	Start	5.1	6222	cpm	54665	cpm	Ok	48443	cpm	Ok	
12/12/2013	NFSS	PA	End	5.1	7610	cpm	51817	cpm	Ok	44207	cpm	Ok	
12/13/2013	NFSS	PA	Start	5.1	6046	cpm	53313	cpm	Ok	47267	cpm	Ok	
12/13/2013	NFSS	PA	End	5	5607	cpm	52115	cpm	Ok	46508	cpm	Ok	
12/16/2013	NFSS	PA	Start	5.1	5509	cpm	53408	cpm	Ok	47899	cpm	Ok	
12/16/2013	NFSS	PA	End	5.1	5089	cpm	50034	cpm	Ok	44945	cpm	Ok	
12/17/2013	NFSS	PA	Start	5.2	5732	cpm	52988	cpm	Ok	47256	cpm	Ok	
12/17/2013	NFSS	PA	End	5.1	5787	cpm	54755	cpm	Ok	48968	cpm	Ok	
12/18/2013	NFSS	PA	Start	5.1	5613	cpm	54147	cpm	Ok	48534	cpm	Ok	
12/18/2013	NFSS	PA	End	5.1	5516	cpm	51634	cpm	Ok	46118	cpm	Ok	
12/19/2013	NFSS	PA	Start	5.1	5554	cpm	50150	cpm	Ok	44596	cpm	Ok	
6/11/2014	NFSS	ARJ	Start	5.4	6894	cpm	59819	cpm	Ok	52925	cpm	Ok	PreShipment check
6/11/2014	NFSS	ARJ	Start	5.4	7101	cpm	59718	cpm	Ok	52617	cpm	Ok	PreShipment check
6/16/2014	NFSS	KG	Start	5	6465	cpm	55215	cpm	Ok	48750	cpm	Ok	
6/17/2014	NFSS	KG	Start	5	4953	cpm	57278	cpm	Ok	52325	cpm	Ok	

Source Check Form

Instrument Configuration			
Instrument(Mfg/Mdl)	Ludlum Model 2221	Serial #	148443
Probe(Mfg/Mdl)	Ludlum 44-10	Serial #	150422
Cable Length	5 ft cable	HV	899

Calibration					
Calibration Date	10/28/2013	Certificate #	17843B	Due	10/28/2013

Check Source						
Source Name	yellow	Serial #	N/A	Assay Date	N/A	
Nuclide	Mixed	Half life	N/A	Activity	N/A	

Detailed description of instrument and source positioning for daily check, and any other notes

Window is out set at 3611, Threshold is 99

Tolerances					5181-7771		46865-70298			41684-62527			
			Start		Bkgd		Source			Net			
6/17/2014	NFSS	KG	End	5.1	4880	cpm	57411	cpm	Ok	52531	cpm	Ok	
6/18/2014	NFSS	KG	Start	5	4539	cpm	54720	cpm	Ok	50181	cpm	Ok	
6/18/2014	NFSS	KG	End			cpm		cpm			cpm	Fail	Removed from ser

Source Check Form

Instrument Configuration			
Instrument(Mfg/Mdl)	Ludlum Model 2221	Serial #	254783
Probe(Mfg/Mdl)	Ludlum 44-10 w/ Shield	Serial #	150784
Cable Length	15 ft cable	HV	1200

Calibration					
Calibration Date	10/7/2013	Certificate #	NA	Due	10/7/2014

Check Source						
Source Name	2m source #1	Serial #	2m source #1	Assay Date	N/A	
Nuclide	Mixed	Half life	N/A	Activity	N/A	

Detailed description of instrument and source positioning for daily check, and any other notes
Window is out set at 4000, Threshold is 101
Use 4" cup to position source away from detector.

Initial QC Set Up						
	Source			Bkdg		Net
	1	4734		1778		2956
	2	4686		1652		3034
	3	4792		1815		2977
	4	4721		1871		2850
	5	4700		1850		2850
	6	4654		1805		2849
	7	4811		1751		3060
	8	4818		1842		2976
	9	4733		1748		2985
	10	4887		1751		3136
Average		4754		1786		2967
Tolerance		3803		1429		2374
± 20%		5704		2144		3561

Source Check Form

Instrument Configuration			
Instrument(Mfg/Mdl)	Ludlum Model 2221	Serial #	254783
Probe(Mfg/Mdl)	Ludlum 44-10 w/ Shield	Serial #	150784
Cable Length	15 ft cable	HV	1200

Calibration					
Calibration Date	10/7/2013	Certificate #	NA	Due	10/7/2014

Check Source						
Source Name	2m source #1	Serial #	2m source #1	Assay Date	N/A	
Nuclide	Mixed	Half life	N/A	Activity	N/A	

Detailed description of instrument and source positioning for daily check, and any other notes
Window is out set at 4000, Threshold is 101
Use 4" cup to position source away from detector.

Tolerances 1429-2144 3803-5704 2374-5704

Date	Project	Initials	Start /end	Batt	Bkgd Reading	Bkgd Units	Source Reading	Source Units	Source Ok?	Net Reading	Net Units	Net Ok?	Notes
11/1/2013	NFSS	PA	start	5.6	1541	cpm	5014	cpm	Ok	3473	cpm	Ok	
11/4/2013	NFSS	PA	Start	5.6	1788	cpm	4908	cpm	Ok	3120	cpm	Ok	
11/5/2013	NFSS	PA	Start	5.6	1408	cpm	4888	cpm	Ok	3480	cpm	Ok	
11/6/2013	NFSS	PA	Start	5.6	1510	cpm	4926	cpm	Ok	3416	cpm	Ok	
11/7/2013	NFSS	PA	Start	5.6	1524	cpm	4774	cpm	Ok	3250	cpm	Ok	
11/8/2013	NFSS	PA	Start	5.6	1472	cpm	4875	cpm	Ok	3403	cpm	Ok	
11/11/2013	NFSS	PA	Start	5.5	1436	cpm	4666	cpm	Ok	3230	cpm	Ok	
11/12/2013	NFSS	PA	Start	5.6	1382	cpm	4486	cpm	Ok	3104	cpm	Ok	
11/13/2013	NFSS	PA	Start	5.5	1490	cpm	4994	cpm	Ok	3504	cpm	Ok	
11/14/2013	NFSS	PA	Start	5.6	1364	cpm	4882	cpm	Ok	3518	cpm	Ok	
11/15/2013	NFSS	PA	Start	5.6	2023	cpm	4916	cpm	Ok	2893	cpm	Ok	
11/18/2013	NFSS	PA	Start	5.6	1500	cpm	4716	cpm	Ok	3216	cpm	Ok	
11/19/2013	NFSS	PA	Start	5.5	1539	cpm	5074	cpm	Ok	3535	cpm	Ok	
11/20/2013	NFSS	PA	Start	5.6	1611	cpm	4731	cpm	Ok	3120	cpm	Ok	
11/21/2013	NFSS	PA	Start	5.6	1544	cpm	4935	cpm	Ok	3391	cpm	Ok	
11/22/2013	NFSS	PA	Start	5.6	1560	cpm	4964	cpm	Ok	3404	cpm	Ok	
11/23/2013	NFSS	PA	end	5.5	2332	cpm	5451	cpm	Ok	3119	cpm	Ok	
11/25/2013	NFSS	PA	start	5.5	1432	cpm	4858	cpm	Ok	3426	cpm	Ok	
11/25/2013	NFSS	PA	end	5.4	1470	cpm	4617	cpm	Ok	3147	cpm	Ok	
11/26/2013	NFSS	PA	start	5.5	1656	cpm	4871	cpm	Ok	3215	cpm	Ok	
11/26/2013	NFSS	PA	end	5.4	2029	cpm	4508	cpm	Ok	2479	cpm	Ok	
11/27/2013	NFSS	PA	start	5.5	1404	cpm	4826	cpm	Ok	3422	cpm	Ok	
12/2/2013	NFSS	PA	start	5.5	1486	cpm	5025	cpm	Ok	3539	cpm	Ok	
12/2/2013	NFSS	PA	end	5.5	1453	cpm	4916	cpm	Ok	3463	cpm	Ok	
12/3/2013	NFSS	PA	start	5.5	1464	cpm	4709	cpm	Ok	3245	cpm	Ok	
12/3/2013	NFSS	ML	end	5.5	1426	cpm	4587	cpm	Ok	3161	cpm	Ok	
12/4/2013	NFSS	PA	start	5.5	1528	cpm	4983	cpm	Ok	3455	cpm	Ok	
12/4/2013	NFSS	PA	end	5.4	1421	cpm	4627	cpm	Ok	3206	cpm	Ok	
12/5/2013	NFSS	PA	start	5.4	1502	cpm	4873	cpm	Ok	3371	cpm	Ok	

Source Check Form

Instrument Configuration			
Instrument(Mfg/Mdl)	Ludlum Model 2241	Serial #	149394
Probe(Mfg/Mdl)	Ludlum 44-9 Pancake	Serial #	251672
Cable Length	39" cable	HV	900

Calibration					
Calibration Date	9/26/2013	Certificate #	NA	Due	9/26/2014

Check Source						
Source Name	Beta Gamma Source	Serial #	7181-11	Assay Date	3/7/2011	
Nuclide	Tc-99	Half life	211000 years	Activity	8550 cpm 13700 dpm	

Detailed description of instrument and source positioning for daily check, and any other notes

Initial QC Set Up						
	Source			Bkdg		Net
	1	1361		39		1322
	2	1262		43		1219
	3	1290		34		1256
	4	1304		38		1266
	5	1289		41		1248
	6	1232		36		1196
	7	1342		41		1301
	8	1288		38		1250
	9	1338		49		1289
	10	1378		31		1347
Average		1308		39		1269
Tolerance		1047		31		1016
± 20%		1570		47		1523

Source Check Form

Instrument Configuration			
Instrument(Mfg/Mdl)	Ludlum Model 2241	Serial #	149394
Probe(Mfg/Mdl)	Ludlum 44-9 Pancake	Serial #	251672
Cable Length	39" cable	HV	900

Calibration					
Calibration Date	9/26/2013	Certificate #	NA	Due	9/26/2014

Check Source						
Source Name	Beta Gamma Source	Serial #	7181-11	Assay Date	3/7/2011	
Nuclide	Tc-99	Half life	211000 years	Activity	8550 cpm 13700 dpm	

Detailed description of instrument and source positioning for daily check, and any other notes

Tolerances

Date	Project	Initials	Start /end	Batt	Bkgd Reading	Bkgd Units	Source Reading	Source Units	Source Ok?	Net Reading	Net Units	Net Ok?	Notes
11/1/2013	NFSS	PA	Start	ok	33	cpm	1441	cpm	Ok	1408	cpm	Ok	
11/4/2013	NFSS	PA	Start	ok	42	cpm	1060	cpm	Ok	1018	cpm	Ok	
11/4/2013	NFSS	PA	End	ok	37	cpm	1560	cpm	Ok	1523	cpm	Ok	
11/5/2013	NFSS	PA	Start	ok	29	cpm	1420	cpm	Ok	1391	cpm	Ok	
11/6/2013	NFSS	PA	Start	ok	32	cpm	1534	cpm	Ok	1502	cpm	Ok	
11/6/2013	NFSS	ARJ	End	ok	46	cpm	1448	cpm	Ok	1402	cpm	Ok	
11/7/2013	NFSS	PA	Start	ok	33	cpm	1546	cpm	Ok	1513	cpm	Ok	
11/7/2013	NFSS	PA	End	ok	38	cpm	1499	cpm	Ok	1461	cpm	Ok	
11/8/2013	NFSS	PA	Start	ok	39	cpm	1460	cpm	Ok	1421	cpm	Ok	
11/8/2013	NFSS	PA	End	ok	46	cpm	1491	cpm	Ok	1445	cpm	Ok	
11/11/2013	NFSS	PA	Start	ok	32	cpm	1550	cpm	Ok	1518	cpm	Ok	
11/12/2013	NFSS	PA	Start	ok	35	cpm	1153	cpm	Ok	1118	cpm	Ok	
11/13/2013	NFSS	PA	Start	ok	33	cpm	1470	cpm	Ok	1437	cpm	Ok	
11/14/2013	NFSS	PA	Start	ok	37	cpm	1402	cpm	Ok	1365	cpm	Ok	
11/15/2013	NFSS	PA	Start	ok	41	cpm	1554	cpm	Ok	1513	cpm	Ok	
11/18/2013	NFSS	PA	Start	ok	32	cpm	1253	cpm	Ok	1221	cpm	Ok	
11/18/2013	NFSS	PA	Start	ok	52	cpm	1283	cpm	Ok	1231	cpm	Ok	
11/19/2013	NFSS	PA	Start	ok	48	cpm	1526	cpm	Ok	1478	cpm	Ok	
11/19/2013	NFSS	PA				cpm		cpm			cpm	Fail	
11/21/2013	NFSS	PA	Start	ok	40	cpm	1512	cpm	Ok	1472	cpm	Ok	
11/22/2013	NFSS	PA	Start	ok	31	cpm	1527	cpm	Ok	1496	cpm	Ok	
11/25/2013	NFSS	PA	Start	ok	45	cpm	1377	cpm	Ok	1332	cpm	Ok	
11/26/2013	NFSS	PA	Start	ok	34	cpm	1518	cpm	Ok	1484	cpm	Ok	
11/27/2013	NFSS	PA	Start	ok	38	cpm	1370	cpm	Ok	1332	cpm	Ok	
12/2/2013	NFSS	PA	start	ok	24	cpm	1390	cpm	Ok	1366	cpm	Ok	
12/3/2013	NFSS	PA	start	ok	46	cpm	1504	cpm	Ok	1458	cpm	Ok	
12/4/2013	NFSS	PA	start	ok	36	cpm	1161	cpm	Ok	1125	cpm	Ok	
12/5/2013	NFSS	PA	start	ok	35	cpm	1472	cpm	Ok	1437	cpm	Ok	
12/6/2013	NFSS	PA	start	ok	40	cpm	1460	cpm	Ok	1420	cpm	Ok	
12/9/2013	NFSS	PA	start	ok	43	cpm	1480	cpm	Ok	1437	cpm	Ok	
12/10/2013	NFSS	PA	start	ok	35	cpm	1557	cpm	Ok	1522	cpm	Ok	
12/11/2013	NFSS	PA	start	ok	33	cpm	1548	cpm	Ok	1515	cpm	Ok	

Source Check Form

Instrument Configuration			
Instrument(Mfg/Mdl)	Ludlum Model 2241	Serial #	149394
Probe(Mfg/Mdl)	Ludlum 44-9 Pancake	Serial #	251672
Cable Length	39" cable	HV	900

Calibration					
Calibration Date	9/26/2013	Certificate #	NA	Due	9/26/2014

Check Source						
Source Name	Beta Gamma Source	Serial #	7181-11	Assay Date	3/7/2011	
Nuclide	Tc-99	Half life	211000 years	Activity	8550 cpm 13700 dpm	

Detailed description of instrument and source positioning for daily check, and any other notes

Tolerances

			Start		Bkgd		Source			Net			
12/12/2013	NFSS	PA	start	ok	39	cpm	1428	cpm	Ok	1389	cpm	Ok	
12/13/2013	NFSS	PA	start	ok	25	cpm	1525	cpm	Ok	1500	cpm	Ok	
12/16/2013	NFSS	PA	Start	ok	29	cpm	1552	cpm	Ok	1523	cpm	Ok	
12/17/2013	NFSS	PA	Start	ok	31	cpm	1523	cpm	Ok	1492	cpm	Ok	
12/18/2013	NFSS	PA	Start	ok	45	cpm	1516	cpm	Ok	1471	cpm	Ok	
12/19/2013	NFSS	PA	Start	ok	49	cpm	1539	cpm	Ok	1490	cpm	Ok	

Source Check Form

Instrument Configuration			
Instrument(Mfg/Mdl)	Ludlum Model 2350-1	Serial #	186198
Probe(Mfg/Mdl)	Ludlum 44-10	Serial #	164157
Cable Length	15' cable\	HV	

Calibration					
Calibration Date	6/6/2013	Certificate #	N/A	Due	6/6/2014

Check Source						
Source Name	2M #1	Serial #		Assay Date	N/A	
Nuclide	Mixed	Half life	N/A	Activity	N/A	

Detailed description of instrument and source positioning for daily check, and any other notes

Initial QC Set Up						
Source				Bkdg		Net
	1	60084		7129		52955
	2	60140		6988		53152
	3	60759		5989		54770
	4	60815		5989		54826
	5	61161		6131		55030
	6	61134		7280		53854
	7	61151		6059		55092
	8	60087		6079		54008
	9	61025		6145		54880
	10	59969		6003		53966
Average		60633		6379		54253
Tolerance		48506		5103		43403
± 20%		72759		7655		65104

Source Check Form

Instrument Configuration			
Instrument(Mfg/Mdl)	Ludlum Model 2350-1	Serial #	186198
Probe(Mfg/Mdl)	Ludlum 44-10	Serial #	164157
Cable Length	15' cable\	HV	

Calibration					
Calibration Date	6/6/2013	Certificate #	N/A	Due	6/6/2014

Check Source						
Source Name	2M #1	Serial #		Assay Date	N/A	
Nuclide	Mixed	Half life	N/A	Activity	N/A	

Detailed description of instrument and source positioning for daily check, and any other notes

Tolerances					33-49		10640-15960			10607-15911			
			Start		Bkgd		Source			Net			
Date	Project	Initials	/end	Batt	Reading	Units	Reading	Units	Ok?	Reading	Units	Ok?	Notes
11/21/2013	NFSS	PA	Start	5.2	7057	cpm	62115	cpm	Ok	55058	cpm	Ok	
11/21/2013	NFSS	PA	End	5.2	6051	cpm	63215	cpm	Ok	57164	cpm	Ok	
11/22/2013	NFSS	PA	Start	5.2	6332	cpm	61150	cpm	Ok	54818	cpm	Ok	
11/22/2013	NFSS	PA	End	5.1	6949	cpm	62264	cpm	Ok	55315	cpm	Ok	
11/23/2013	NFSS	PA	Start	5.1	5597	cpm	55744	cpm	Ok	50147	cpm	Ok	
12/9/2013	NFSS	PA	Start	5.2	5488	cpm	60655	cpm	Ok	55167	cpm	Ok	

Instrument Configuration					
Instrument(Mfg/Mdl)	Ludlum Model 2360			Serial #	184903
Probe(Mfg/Mdl)	43-93			Serial #	179868
Cable Length	3 ft			HV	

Instrument Calibration					
Calibration Date	6/9/2014	Certificate #	N/A	Due	6/9/2015

Check Sources											
Name	Alpha	Serial #	11438	Assay Date	11/24/1981	Name	Beta	Serial #	99tc220 3927	Assay Date	12/14/1999
Nuclide	Th-230	Half life	75380 yrs	Activity	20100	Nuclide	Tc-99	Half life	211000 yrs	Activity	9240 dpm

Detailed description of instrument and source positioning for daily check, and any other notes

Initial QC Set Up

Source	Th-230			Tc-99			Bkgd			Net Th-230		Net Tc-99	
	a	a+b	b	a	a+b	b	a	a+b	b	a	b	a	b
1	1217	1698	481	1	1062	1061	1	132	131	1216	350		930
2	1255	1768	513		1088	1088		115	114	1255	399		974
3	1281	1768	487	3	1088	1085		129	129	1281	358	3	956
4	1239	1735	46	1	1084	1083	1	113	112	1238	-66		971
5	1231	1726	495	2	1016	1014	1	147	146	1230	349	1	868
6	1204	1651	447	1	1136	1134		131	131	1204	316	1	1003
7	1192	1673	481		1082	1082		122	122	1192	359		960
8	1256	1740	484		1114	1114	2	104	102	1254	382	-2	1012
9	1243	1740	497	4	1081	1077	2	139	137	1241	360	2	940
10	1269	1733	464	1	979	978		114	114	1269	350	1	864
Average	1239		440	1		1072	1		124	1238			948
Tolerance	991		352	1		857	1		99	990			758
± 20%	1486		527	2		1286	1		149	1486			1137

Instrument Configuration			
Instrument(Mfg/Mdl)	Ludlum Model 2360	Serial #	215282
Probe(Mfg/Mdl)	43-93	Serial #	339058
Cable Length	3 ft	HV	

Instrument Calibration					
Calibration Date	6/18/2014	Certificate #	N/A	Due	6/18/2015

Check Sources											
Name	Alpha	Serial #	11438	Assay Date	11/24/1981	Name	Beta	Serial #	9tc220 392	Assay Date	12/14/1999
Nuclide	Th-230	Half life	75380 yrs	Activity	20100	Nuclide	Tc-99	Half life	211000 yrs	Activity	9240 dpm

Detailed description of instrument and source positioning for daily check, and any other notes

					Bkgd				Th-230					Tc-99					Net				
Date	Project	Initials	Start /end	Batt	α cpm	α +βγ cpm	βγ cpm	Units	α cpm	α +βγ cpm	βγ cpm	Units	Ok	α cpm	α +βγ cpm	βγ cpm	Unit	Ok?	α cpm	Ok?	βγ cpm	Ok?	Notes
6/24/2014	NFSS	ARJ	Start	ok	1	115	114	cpm	1128	1600	472	cpm	Ok	2	1094	1092	cpm	Ok	1127	Ok	979	Ok	
6/24/2014	NFSS	KG	End	ok		97	97	cpm	1280	1740	460	cpm	Ok	5	1077	1072	cpm	Ok	1280	Ok	980	Ok	
6/25/2014	NFSS	KG	Start	ok	1	96	95	cpm	1136	1613	477	cpm	Ok	1	1027	1026	cpm	Ok	1135	Ok	931	Ok	
6/25/2014	NFSS	KG	End	ok		107	107	cpm	1100	1550	450	cpm	Ok		1090	1090	cpm	Ok	1100	Ok	983	Ok	
6/26/2014	NFSS	KG	Start	ok		94	94	cpm	1074	1499	425	cpm	Ok	1	1103	1102	cpm	Ok	1074	Ok	1009	Ok	
6/26/2014	NFSS	KG	End	ok		86	86	cpm	1092	1493	401	cpm	Ok	4	1091	1087	cpm	Ok	1092	Ok	1005	Ok	
6/27/2014	NFSS	KG	Start	ok	1	118	117	cpm	1145	1596	451	cpm	Ok	1	1052	1051	cpm	Ok	1144	Ok	934	Ok	
6/27/2014	NFSS	KG	End	ok		109	109	cpm	1098	1507	409	cpm	Ok	1	1064	1063	cpm	Ok	1098	Ok	955	Ok	
6/30/2014	NFSS	KG	Start	ok	1	119	118	cpm	1166	1605	439	cpm	Ok	1	1071	1070	cpm	Ok	1165	Ok	952	Ok	
6/30/2014	NFSS	KG	End	ok	2	115	113	cpm	1142	1576	434	cpm	Ok		1017	1017	cpm	Ok	1140	Ok	902	Ok	
7/1/2014	NFSS	KG	Start	ok	1	115	114	cpm	1081	1536	456	cpm	Ok	1	1034	1033	cpm	Ok	1080	Ok	919	Ok	
7/1/2014	NFSS	KG	End	ok		119	119	cpm	1167	1639	472	cpm	Ok		980	980	cpm	Ok	1167	Ok	861	Ok	
7/2/2014	NFSS	KG	Start	ok	1	117	116	cpm	955	1378	423	cpm	Ok		1049	1049	cpm	Ok	954	Ok	932	Ok	
7/2/2014	NFSS	KG	End	ok		105	105	cpm	1134	1561	427	cpm	Ok	2	997	995	cpm	Ok	1134	Ok	892	Ok	
7/7/2014	NFSS	KG	Start	ok	1	134	133	cpm	1003	1488	485	cpm	Ok	2	1102	1100	cpm	Ok	1002	Ok	968	Ok	
7/7/2014	NFSS	KG	End	ok	2	107	105	cpm	1210	1646	436	cpm	Ok	4	1066	1062	cpm	Ok	1208	Ok	959	Ok	

Instrument Configuration			
Instrument(Mfg/Mdl)	Ludlum Model 2360	Serial #	215282
Probe(Mfg/Mdl)	43-93	Serial #	339058
Cable Length	3 ft	HV	

Instrument Calibration					
Calibration Date	6/18/2014	Certificate #	N/A	Due	6/18/2015

Check Sources											
Name	Alpha	Serial #	11438	Assay Date	11/24/1981	Name	Beta	Serial #	99tc220 3927	Assay Date	12/14/1999
Nuclide	Th-230	Half life	75380 yrs	Activity	20100	Nuclide	Tc-99	Half life	211000 yrs	Activity	9240 dpm

Detailed description of instrument and source positioning for daily check, and any other notes

Initial QC Set Up

Source		Th-230			Tc-99			Bkgd			Net Th-230		Net Tc-99	
		a	a+b	b	a	a+b	b	a	a+b	b	a	b	a	b
	1	1152	1620	468	3	1121	1118	2	104	102	1150	366	1	1016
	2	1066	1476	410	1	1100	1099		103	103	1066	307	1	996
	3	1077	1501	424	1	1061	1061		83	83	1077	341	1	978
	4	1065	1501	436	3	1039	1036		88	88	1065	348	3	948
	5	1094	1513	419		1049	1049		103	103	1094	316		946
	6	1106	1547	441		1049	1049	2	98	96	1104	345	-2	953
	7	1081	1521	440		1060	1060	2	108	106	1079	334	-2	954
	8	1125	1593	468	1	1104	1103		103	103	1125	365	1	1000
	9	1139	1560	426		1034	1034	2	113	111	1137	315	-2	923
	10	1144	1590	446		1055	1055	2	102	100	1142	346	-2	955
Average		1105		438	1		1066	1		100	1104			967
Tolerance		884		350	1		853	1		80	883			774
± 20%		1326		525	1		1280	1		119	1325			1160

Instrument Configuration			
Instrument(Mfg/Mdl)	Ludlum Model 2360	Serial #	215282
Probe(Mfg/Mdl)	43-93	Serial #	339058
Cable Length	3 ft	HV	

Instrument Calibration					
Calibration Date	6/18/2014	Certificate #	N/A	Due	6/18/2015

Check Sources											
Name	Alpha	Serial #	11438	Assay Date	11/24/1981	Name	Beta	Serial #	9tc220 392	Assay Date	12/14/1999
Nuclide	Th-230	Half life	75380 yrs	Activity	20100	Nuclide	Tc-99	Half life	211000 yrs	Activity	9240 dpm

Detailed description of instrument and source positioning for daily check, and any other notes

					Bkgd				Th-230					Tc-99					Net				
Date	Project	Initials	Start /end	Batt	α cpm	α +βγ cpm	βγ cpm	Units	α cpm	α +βγ cpm	βγ cpm	Units	Ok	α cpm	α +βγ cpm	βγ cpm	Unit	Ok?	α cpm	Ok?	βγ cpm	Ok?	Notes
6/24/2014	NFSS	ARJ	Start	ok	1	115	114	cpm	1128	1600	472	cpm	Ok	2	1094	1092	cpm	Ok	1127	Ok	979	Ok	
6/24/2014	NFSS	KG	End	ok		97	97	cpm	1280	1740	460	cpm	Ok	5	1077	1072	cpm	Ok	1280	Ok	980	Ok	
6/25/2014	NFSS	KG	Start	ok	1	96	95	cpm	1136	1613	477	cpm	Ok	1	1027	1026	cpm	Ok	1135	Ok	931	Ok	
6/25/2014	NFSS	KG	End	ok		107	107	cpm	1100	1550	450	cpm	Ok		1090	1090	cpm	Ok	1100	Ok	983	Ok	
6/26/2014	NFSS	KG	Start	ok		94	94	cpm	1074	1499	425	cpm	Ok	1	1103	1102	cpm	Ok	1074	Ok	1009	Ok	
6/26/2014	NFSS	KG	End	ok		86	86	cpm	1092	1493	401	cpm	Ok	4	1091	1087	cpm	Ok	1092	Ok	1005	Ok	
6/27/2014	NFSS	KG	Start	ok	1	118	117	cpm	1145	1596	451	cpm	Ok	1	1052	1051	cpm	Ok	1144	Ok	934	Ok	
6/27/2014	NFSS	KG	End	ok		109	109	cpm	1098	1507	409	cpm	Ok	1	1064	1063	cpm	Ok	1098	Ok	955	Ok	
6/30/2014	NFSS	KG	Start	ok	1	119	118	cpm	1166	1605	439	cpm	Ok	1	1071	1070	cpm	Ok	1165	Ok	952	Ok	
6/30/2014	NFSS	KG	End	ok	2	115	113	cpm	1142	1576	434	cpm	Ok		1017	1017	cpm	Ok	1140	Ok	902	Ok	
7/1/2014	NFSS	KG	Start	ok	1	115	114	cpm	1081	1536	456	cpm	Ok	1	1034	1033	cpm	Ok	1080	Ok	919	Ok	
7/1/2014	NFSS	KG	End	ok		119	119	cpm	1167	1639	472	cpm	Ok		980	980	cpm	Ok	1167	Ok	861	Ok	
7/2/2014	NFSS	KG	Start	ok	1	117	116	cpm	955	1378	423	cpm	Ok		1049	1049	cpm	Ok	954	Ok	932	Ok	
7/2/2014	NFSS	KG	End	ok		105	105	cpm	1134	1561	427	cpm	Ok	2	997	995	cpm	Ok	1134	Ok	892	Ok	
7/7/2014	NFSS	KG	Start	ok	1	134	133	cpm	1003	1488	485	cpm	Ok	2	1102	1100	cpm	Ok	1002	Ok	968	Ok	
7/7/2014	NFSS	KG	End	ok	2	107	105	cpm	1210	1646	436	cpm	Ok	4	1066	1062	cpm	Ok	1208	Ok	959	Ok	

Instrument Configuration					
Instrument(Mfg/Mdl)	Ludlum Model 2360			Serial #	220246
Probe(Mfg/Mdl)	43-93			Serial #	199826
Cable Length	3 ft			HV	750

Instrument Calibration					
Calibration Date	10/3/2013	Certificate #	N/A	Due	11/6/2013

Check Sources											
Source Name	Alpha Source	Serial #	7120-10	Assay Date	7/27/2010	Source Nam	Beta Source	Serial #	7181-11	Assay Date	3/7/2011
Nuclide	Th-230	Half life	75380 years	Activity	9910 cpm/ 19500 dpm	Nuclide	Tc-99	Half life	211000 year	Activity	cpm 13700

Detailed description of instrument and source positioning for daily check, and any other notes

Initial QC Set Up

Source		Th-230			Tc-99				Bkgd				Net Th-230		Net Tc-99	
		a	a+b	b	a	a+b	b		a	a+b	b		a	b	a	b
	1	2795	3351	556			2100			133	133		2795	423		1967
	2	2725	3214	489			2269		1	150	149		2724	340	-1	2120
	3	2739	3233	494			2197		2	178	176		2737	318	-2	2021
	4	2679	3178	494			2139			165	165		2679	329		1974
	5	2764	3284	520			2104			142	142		2764	378		1962
	6	2882	3480	598			1943			157	157		2882	441		1786
	7	2693	3196	503			2203		2	156	154		2691	349	-2	2049
	8	2759	3341	582			2207		2	151	149		2757	433	-2	2058
	9	2799	3328	529			2041			148	148		2799	381		1893
	10	2824	3350	526			2154			169	169		2824	357		1985
Average		2766		529			2136		1		154		2765			1982
Tolerance		2213		423			1709		1		123		2212			1585
± 20%		3319		635			2563		1		185		3318			2378

QC Set Up post mylar repair 11/13/13

Source		Th-230			Tc-99				Bkgd				Net Th-230		Net Tc-99	
		a	a+b	b	a	a+	b		a	a+b	b		a	b	a	b
	1	2795	3351	556			2100			133	133		2795	423		1967
	2	2725	3214	489			2269		1	150	149		2724	340	-1	2120
	3	2739	3233	494			2197		2	178	176		2737	318	-2	2021
	4	2679	3178	494			2139			165	165		2679	329		1974
	5	2764	3284	520			2104			142	142		2764	378		1962
	6	2882	3480	598			1943			157	157		2882	441		1786
	7	2693	3196	503			2203		2	156	154		2691	349	-2	2049
	8	2759	3341	582			2207		2	151	149		2757	433	-2	2058
	9	2799	3328	529			2041			148	148		2799	381		1893
	10	2824	3350	526			2154			169	169		2824	357		1985
Average		2766		529			2136		1		154		2765	375	-1	1982
Tolerance		2213		423			1709		1		123		2212	300	-1	1585
± 20%		3319		635			2563		1		185		3318	450	-1	2378

Instrument Configuration					
Instrument(Mfg/Mdl)	Ludlum Model 2360			Serial #	220246
Probe(Mfg/Mdl)	43-93			Serial #	199826
Cable Length	3 ft			HV	750

Instrument Calibration					
Calibration Date	10/3/2013	Certificate #	N/A	Due	11/6/2013

Check Sources											
Source Name	Alpha Source	Serial #	7120-10	Assay Date	7/27/2010	Source Nan	Beta Source	Serial #	7181-11	Assay Date	3/7/2011
Nuclide	Th-230	Half life	75380 years	Activity	10 cpm/ 19500 d	Nuclide	Tc-99	Half life	211000 years	Activity	8550 cpm 13700 dpm

Detailed description of instrument and source positioning for daily check, and any other notes

					Bkgd				Th-230					Tc-99					Net				
Date	Project	Initials	Start /end	Batt	α cpm	α +βγ cpm	βγ cpm	Units	α cpm	α +βγ cpm	βγ cpm	Units	Ok?	α cpm	α +βγ cpm	βγ cpm	Units	Ok?	α cpm	Ok?	βγ cpm	Ok?	Notes
11/14/2013	NFSS	pa	Start	ok	1	169	168	cpm	2691	3205	514	cpm	Ok	2	2090	2088	cpm	Ok	2690	Ok	1921	Ok	
11/15/2013	NFSS	pa	start	ok		158	158	cpm	2743	3266	523	cpm	Ok	2	2177	2175	cpm	Ok	2743	Ok	2019	Ok	
11/15/2013	NFSS	pa	end	ok		187	187	cpm	2724	3264	540	cpm	Ok	2	2235	2233	cpm	Ok	2724	Ok	2048	Ok	
11/18/2013	NFSS	PA	start	ok		158	158	cpm	2696	3257	562	cpm	Ok	1	2183	2182	cpm	Ok	2696	Ok	2025	Ok	
11/19/2013	NFSS	PA	end	ok		178	178	cpm	2871	3388	517	cpm	Ok	1	2004	2003	cpm	Ok	2871	Ok	1826	Ok	
11/20/2013	NFSS	PA	start	ok	1	152	151	cpm	2649	3081	432	cpm	Ok	1	2157	2156	cpm	Ok	2648	Ok	2005	Ok	
11/20/2013	NFSS	PA	end	ok	1	173	172	cpm	2776	3290	514	cpm	Ok	1	2088	2087	cpm	Ok	2775	Ok	1915	Ok	
11/21/2013	NFSS	PA	start	ok	1	146	145	cpm	2660	3173	513	cpm	Ok	1	2034	2033	cpm	Ok	2659	Ok	1888	Ok	
11/21/2013	NFSS	PA	end	ok	1	171	170	cpm	2733	3258	525	cpm	Ok	1	2261	2260	cpm	Ok	2732	Ok	2090	Ok	
11/22/2013	NFSS	PA	start	ok	1	165	165	cpm	2816	3343	577	cpm	Ok		2185	2185	cpm	Ok	2815	Ok	2020	Ok	
11/22/2013	NFSS	PA	end	ok	1	191	190	cpm	2632	3197	565	cpm	Ok		2054	2054	cpm	Ok	2631	Ok	1863	Ok	
11/25/2013	NFSS	PA	start	ok		144	144	cpm	2592	3098	507	cpm	Ok		2038	2038	cpm	Ok	2592	Ok	1894	Ok	
11/25/2013	NFSS	PA	end	ok	1	176	175	cpm	2795	3322	533	cpm	Ok		2244	2244	cpm	Ok	2794	Ok	2068	Ok	
11/26/2013	NFSS	PA	Start	ok	2	196	194	cpm	2764	3293	529	cpm	Ok	1	2226	2225	cpm	Ok	2762	Ok	2030	Ok	
11/26/2013	NFSS	PA	end	ok		160	160	cpm	2411	2922	511	cpm	Ok		2140	2140	cpm	Ok	2411	Ok	1980	Ok	
11/27/2013	NFSS	PA	Start	ok	2	178	176	cpm	2792	3301	509	cpm	Ok	2	2227	2225	cpm	Ok	2790	Ok	2049	Ok	
11/27/2013	NFSS	PA	end	ok		161	161	cpm	2610	3150	540	cpm	Ok	3	2241	2238	cpm	Ok	2610	Ok	2080	Ok	
12/2/2013	NFSS	PA	Start	ok	1	186	185	cpm	2476	2959	483	cpm	Ok	3	2051	2048	cpm	Ok	2475	Ok	1865	Ok	
12/2/2013	NFSS	PA	end	ok	1	178	177	cpm	2762	3303	541	cpm	Ok	1	2203	2202	cpm	Ok	2761	Ok	2025	Ok	
12/3/2013	NFSS	PA	Start	ok		176	176	cpm	2702	3190	488	cpm	Ok	3	2209	2206	cpm	Ok	2702	Ok	2033	Ok	
12/3/2013	NFSS	PA	end	ok		187	187	cpm	2690	3231	541	cpm	Ok	3	2230	2227	cpm	Ok	2690	Ok	2043	Ok	
12/4/2013	NFSS	PA	Start	ok		203	203	cpm	2739	3196	457	cpm	Ok	3	2131	2128	cpm	Ok	2739	Ok	1928	Ok	

Instrument Configuration					
Instrument(Mfg/Mdl)	Ludlum Model 2360			Serial #	220246
Probe(Mfg/Mdl)	43-93			Serial #	199826
Cable Length	3 ft			HV	750

Instrument Calibration					
Calibration Date	10/3/2013	Certificate #	N/A	Due	11/6/2013

12/4/2013	NFSS	PA	end	ok		172	172	cpm	2657	3153	496	cpm	Ok	3	1925	1922	cpm	Ok	2657	Ok	1753	Ok
12/5/2013	NFSS	PA	Start	ok		161	161	cpm	2442	2975	533	cpm	Ok	1	2031	2030	cpm	Ok	2442	Ok	1870	Ok
12/5/2013	NFSS	PA	end	ok		91	91	cpm	2650	3190	540	cpm	Ok		2182	2182	cpm	Ok	2650	Ok	2091	Ok
12/6/2013	NFSS	PA	Start	ok		97	97	cpm	2468	3020	552	cpm	Ok		2221	2221	cpm	Ok	2468	Ok	2124	Ok
12/6/2013	NFSS	PA	end	ok		150	150	cpm	2382	2862	480	cpm	Ok	4	2261	2265	cpm	Ok	2382	Ok	2111	Ok
12/9/2013	NFSS	PA	Start	ok	2	201	199	cpm	2589	3219	630	cpm	Ok		2047	2047	cpm	Ok	2587	Ok	1846	Ok
12/9/2013	NFSS	PA	end	ok		182	182	cpm	2533	3077	544	cpm	Ok		2161	2161	cpm	Ok	2533	Ok	1979	Ok
12/10/2013	NFSS	PA	Start	ok	1	172	171	cpm	2580	3078	498	cpm	Ok	1	2106	2105	cpm	Ok	2579	Ok	1934	Ok
12/10/2013	NFSS	PA	end	ok		183	183	cpm	2404	2927	523	cpm	Ok	1	2030	2029	cpm	Ok	2404	Ok	1847	Ok
12/11/2013	NFSS	PA	Start	ok	2	192	190	cpm	2336	2835	499	cpm	Ok	1	2248	2247	cpm	Ok	2334	Ok	2056	Ok
12/11/2013	NFSS	PA	end	ok		175	174	cpm	2684	3236	552	cpm	Ok		2207	2207	cpm	Ok	2684	Ok	2032	Ok
12/12/2013	NFSS	PA	Start	ok	1	158	157	cpm	2603	3147	544	cpm	Ok	2	2147	2145	cpm	Ok	2602	Ok	1989	Ok
12/12/2013	NFSS	PA	end	ok	1	163	162	cpm	2621	3106	485	cpm	Ok	1	2263	2262	cpm	Ok	2620	Ok	2100	Ok
12/13/2013	NFSS	PA	Start	ok	1	168	167	cpm	2434	2951	517	cpm	Ok	1	2152	2151	cpm	Ok	2433	Ok	1984	Ok
12/13/2013	NFSS	PA	end	ok	3	144	141	cpm	2752	3348	596	cpm	Ok		2249	2249	cpm	Ok	2749	Ok	2105	Ok
12/13/2013	NFSS	PA	Start	ok	1	185	184	cpm	2833	3397	564	cpm	Ok		2013	2013	cpm	Ok	2832	Ok	1828	Ok
12/13/2013	NFSS	PA	End	ok		148	148	cpm	2651	3158	537	cpm	Ok		2063	2063	cpm	Ok	2651	Ok	1915	Ok
12/16/2013	NFSS	PA	Start	ok	2	185	183	cpm	2604	3131	527	cpm	Ok	3	2163	2160	cpm	Ok	2602	Ok	1978	Ok
12/16/2013	NFSS	PA	End	ok	1	168	167	cpm	2576	3134	558	cpm	Ok	1	2051	2050	cpm	Ok	2575	Ok	1883	Ok
12/17/2013	NFSS	PA	Start	ok	1	173	172	cpm	2702	3229	527	cpm	Ok	5	1955	1950	cpm	Ok	2701	Ok	1782	Ok
12/17/2013	NFSS	PA	End	ok		158	158	cpm	2490	3089	599	cpm	Ok	2	2139	2137	cpm	Ok	2490	Ok	1981	Ok
12/18/2013	NFSS	PA	Start	ok		164	164	cpm	2397	2850	553	cpm	Ok	1	2299	2298	cpm	Ok	2397	Ok	2135	Ok
12/18/2013	NFSS	PA	End	ok	3	159	156	cpm	2590	3077	487	cpm	Ok	2	2139	2137	cpm	Ok	2587	Ok	1980	Ok
12/19/2013	NFSS	PA	Start	ok	1	164	163	cpm	2687	3210	523	cpm	Ok		2254	2254	cpm	Ok	2686	Ok	2090	Ok

Instrument Configuration					
trument(Mfg/M	Ludlum Model 2360			Serial #	276943
robe(Mfg/Mdl	43-93			Serial #	197430
Cable Length	3 ft			HV	725

Instrument Calibration					
Calibration Da	10/3/2013	Certificate #	N/A	Due	10/3/2014

Check Sources											
Source Name	Alpha Source	Serial #	7120-10	Assay Date	7/27/2010	Source Nam	Beta Source	Serial #	7181-11	Assay Date	3/7/2011
Nuclide	Th-230	Half life	75380 years	Activity	9910 cpm/ 19500 dpm	Nuclide	Tc-99	Half life	211000 years	Activity	8550 cpm 13700 dpm

Detailed description of instrument and source positioning for daily check, and any other notes

Initial QC Set Up

Source	Th-230			Tc-99				Bkgd				Net Th-230		Net Tc-99	
	a	a+b	b	a	a+b	b		a	a+b	b		a	b	a	b
1	2037	2442	405	1	1456	1455			104	104		2037	301	1	1351
2	1912	2311	399	2	1412	1410			105	105		1912	294	2	1305
3	2032	2427	395		1449	1449			122	122		2032	273		1327
4	2010	2401	391		1427	1427			125	125		2010	266		1302
5	2070	2470	400	1	1430	1429			104	103		2070	297	1	1326
6	2038	2429	391	1	1370	1369		2	105	103		2036	288	-1	1266
7	2022	2454	432	2	1431	1433		1	94	93		2021	339	1	1340
8	2081	2478	397	1	1349	1348			113	113		2081	284	1	1235
9	2094	2505	411	1	1414	1413			103	103		2094	308	1	1310
10	1987	2403	416	1	1435	1434		2	102	102		1985	314	-1	1332
Average	2028		404	1		1417		1		107		2028			1309
Tolerance	1623		323	1		1133		1		86		1622			1048
± 20%	2434		484	1		1700		1		129		2433			1571

QC Set Up post mylar repair 11/08/13

Source	Th-230			Tc-99				Bkgd				Net Th-230		Net Tc-99	
	a	a+b	b	a	a+b	b		a	a+b	b		a	b	a	b
1	2542	2926	384	1	1561	1560		1	97	96		2541	288		1464
2	2452	268	416	4	1502	1498		2	110	108		2450	308	2	1390
3	2559	2916	357	5	1645	1640			84	84		2559	273	5	1556
4	2511	2907	396	1	1536	1535		3	118	115		2508	281	-2	1420
5	2443	2847	404	3	1522	1585			98	98		2443	306	3	1487
6	2518	2959	451	2	1571	1579		2	120	118		2516	333		1461
7	2478	2891	413	2	1544	1542		2	91	89		2476	324		1453
8	2472	2872	400	2	1561	1559		1	89	88		2471	312	1	1471
9	2338	2725	387		1634	1634		3	97	94		2335	293	-3	1540
10	2594	3017	423		1566	1566		3	95	92		2591	331	-3	1474
Average	2491		403	2		1570		2		98		2489			1472
Tolerance	1993		322	2		1256		1		79		1991			1177
± 20%	2989		484	2		1884		2		118		2987			1766

Instrument Configuration					
Instrument(Mfg/Mdl)	Ludlum Model 2360			Serial #	276943
Probe(Mfg/Mdl)	43-93			Serial #	197430
Cable Length	3 ft			HV	725

Instrument Calibration					
Calibration Date	10/3/2013	Certificate #	N/A	Due	10/3/2014

Check Sources											
Source Name	Alpha Source	Serial #	7120-10	Assay Date	7/27/2010	Source Nar	Beta Source	Serial #	7181-11	Assay Date	3/7/2011
Nuclide	Th-230	Half life	75380 years	Activity	910 cpm/ 19500 dp	Nuclide	Tc-99	Half life	211000 years	Activity	8550 cpm 13700 dpm

Detailed description of instrument and source positioning for daily check, and any other notes

					Bkgd				Th-230					Tc-99					Net				
Date	Project	Initials	Start /end	Batt	α cpm	α +βγ cpm	βγ cpm	Units	α cpm	α +βγ cpm	βγ cpm	Units	Ok?	α cpm	α +βγ cpm	βγ cpm	Units	Ok?	α cpm	Ok?	βγ cpm	Ok?	Notes
11/1/2013	NFSS	PA		ok		103	103	cpm	2276	2624	348	cpm	Ok	1	1538	1537	cpm	Ok	2276	Ok	1435	Ok	
11/4/2013	NFSS	PA	Start	ok	1	127	128	cpm	2371	2797	426	cpm	Ok	1	1600	1599	cpm	Ok	2370	Ok	1473	Ok	
11/5/2013	NFSS	PA	Start	ok		101	101	cpm	2349	2873	524	cpm	Ok	1	1530	1330	cpm	Ok	2349	Ok	1429	Ok	
11/6/2013	NFSS	PA	Start	ok	1	113	114	cpm	2258	2661	403	cpm	Ok	1	1592	1591	cpm	Ok	2257	Ok	1479	Ok	
11/6/2013	NFSS	PA	End	ok				cpm				cpm					cpm			Fail		Fail	Mylar Fail Repaired
11/8/2013	NFSS	PA	End	ok		117	117	cpm	2525	2872	347	cpm	Ok	2	1611	1609	cpm	Ok	2525	Ok	1494	Ok	
11/11/2013	NFSS	PA	Start	ok		119	119	cpm	2532	2916	384	cpm	Ok		1561	1561	cpm	Ok	2532	Ok	1442	Ok	
11/11/2013	NFSS	PA	End	ok	1	124	123	cpm	2440	2826	386	cpm	Ok	1	1597	1596	cpm	Ok	2439	Ok	1473	Ok	
11/12/2013	NFSS	PA	Start	ok		118	118	cpm	2502	2902	384	cpm	Ok		1527	1527	cpm	Ok	2502	Ok	1409	Ok	
11/12/2013	NFSS	PA	End	ok		115	115	cpm	2176	2550	374	cpm	Ok	2	1496	1494	cpm	Ok	2176	Ok	1381	Ok	
11/13/2013	NFSS	PA	Start	ok		88	88	cpm	2332	2703	371	cpm	Ok	2	1558	1556	cpm	Ok	2332	Ok	1470	Ok	
11/13/2013	NFSS	PA	End	ok	1	104	103	cpm	2103	2466	363	cpm	Ok		1544	1544	cpm	Ok	2102	Ok	1440	Ok	
11/14/2013	NFSS	PA	Start	ok		97	97	cpm	2177	2526	349	cpm	Ok	1	1508	1507	cpm	Ok	2177	Ok	1411	Ok	
11/14/2013	NFSS	PA	End	ok		116	116	cpm	2363	2704	341	cpm	Ok	1	1562	1563	cpm	Ok	2363	Ok	1446	Ok	
11/15/2013	NFSS	PA	Start	ok		154	154	cpm	2267	2656	389	cpm	Ok		1541	1541	cpm	Ok	2267	Ok	1387	Ok	
11/18/2013	NFSS	PA	Start	ok	1	119	118	cpm	2242	2606	364	cpm	Ok	1	1617	1616	cpm	Ok	2241	Ok	1498	Ok	
11/18/2013	NFSS	PA	End	ok		114	114	cpm	2205	2576	371	cpm	Ok		1498	1498	cpm	Ok	2205	Ok	1384	Ok	
11/19/2013	NFSS	PA	Start	ok		150	148	cpm	2187	2545	358	cpm	Ok	1	1497	1496	cpm	Ok	2187	Ok	1347	Ok	
11/19/2013	NFSS	PA	End	ok		106	106	cpm	2061	2417	356	cpm	Ok	2	1604	1602	cpm	Ok	2061	Ok	1498	Ok	
11/20/2013	NFSS	PA	Start	ok	2	96	94	cpm	2257	2619	362	cpm	Ok	1	1561	1560	cpm	Ok	2255	Ok	1465	Ok	
11/20/2013	NFSS	ML	End	ok		91	91	cpm	2795	3182	387	cpm	Ok		1684	1684	cpm	Ok	2795	Ok	1593	Ok	
11/21/2013	NFSS	PA	Start	ok	1	158	157	cpm	2218	2620	402	cpm	Ok	1	1411	1410	cpm	Ok	2217	Ok	1253	Ok	

Instrument Configuration					
Instrument(Mfg/Mdl)	Ludlum Model 2360			Serial #	276943
Probe(Mfg/Mdl)	43-93			Serial #	197430
Cable Length	3 ft			HV	725

Instrument Calibration					
Calibration Date	10/3/2013	Certificate #	N/A	Due	10/3/2014

11/22/2013	NFSS	PA	Start	ok	1	102	101	cpm	2205	2601	396	cpm	Ok		1547	1547	cpm	Ok	2204	Ok	1445	Ok	
11/25/2013	NFSS	PA	start	ok		106	106	cpm	2034	2409	375	cpm	Ok	2	1532	1530	cpm	Ok	2034	Ok	1426	Ok	
11/26/2013	NFSS	PA	Start	ok	1	108	107	cpm	2029	2399	370	cpm	Ok	3	1526	1523	cpm	Ok	2028	Ok	1418	Ok	
11/27/2013	NFSS	PA	Start	ok		86	86	cpm	2120	2500	380	cpm	Ok	1	1487	1486	cpm	Ok	2120	Ok	1401	Ok	
12/2/2013	NFSS	PA	start	ok	1	114	113	cpm	2127	2539	412	cpm	Ok	1	1517	1516	cpm	Ok	2126	Ok	1403	Ok	
12/3/2013	NFSS	PA	start	ok	2	109	107	cpm	2222	2557	335	cpm	Ok	1	1525	1524	cpm	Ok	2220	Ok	1416	Ok	
12/4/2013	NFSS	PA	start	ok	3	101	98	cpm	2107	2479	372	cpm	Ok	2	1501	1499	cpm	Ok	2104	Ok	1400	Ok	
12/5/2013	NFSS	PA	start	ok	1	115	114	cpm	2219	2645	405	cpm	Ok		1498	1498	cpm	Ok	2218	Ok	1383	Ok	
12/6/2013	NFSS	PA	start	ok		116	116	cpm	2221	2597	376	cpm	Ok	2	1501	1499	cpm	Ok	2221	Ok	1385	Ok	
12/9/2013	NFSS	PA	start	ok	4	116	112	cpm	2095	2501	406	cpm	Ok	2	1502	1500	cpm	Ok	2091	Ok	1386	Ok	
12/10/2013	NFSS	PA	start	ok	1	91	90	cpm	2052	2436	384	cpm	Ok		1557	1557	cpm	Ok	2051	Ok	1466	Ok	
12/10/2013	NFSS	PA	end	ok		96	96	cpm	2184	2539	355	cpm	Ok		1502	1502	cpm	Ok	2184	Ok	1406	Ok	
12/11/2013	NFSS	PA	start	ok	1	111	110	cpm	2638	3142	504	cpm	Ok	1	1525	1524	cpm	Ok	2637	Ok	1414	Ok	
12/12/2013	NFSS	PA	start	ok	1	83	82	cpm	2195	2603	408	cpm	Ok	1	1562	1561	cpm	Ok	2194	Ok	1479	Ok	
12/13/2013	NFSS	PA	start	ok	1	133	132	cpm	2176	2605	429	cpm	Ok		1560	1560	cpm	Ok	2175	Ok	1427	Ok	
12/13/2013	NFSS	PA	End	ok	3	131	128	cpm	2293	2696	403	cpm	Ok		1561	1561	cpm	Ok	2290	Ok	1430	Ok	
12/16/2013	NFSS	PA	Start	ok	4	117	113	cpm	2174	2549	375	cpm	Ok		1566	1566	cpm	Ok	2829	Ok	1449	Ok	
12/17/2013	NFSS	PA	Start	ok	3	97	94	cpm	2136	2535	399	cpm	Ok	2	1621	1619	cpm	Ok	2648	Ok	1524	Ok	
12/18/2013	NFSS	PA	Start	ok	2	102	100	cpm	2242	2668	426	cpm	Ok	5	1555	1550	cpm	Ok	2602	Ok	1453	Ok	
12/19/2013	NFSS	PA	Start	ok		108	108	cpm	2209	2614	405	cpm	Ok	1	1685	1684	cpm	Ok	2576	Ok	1577	Ok	

Counter 121870 Set up

121870			Tc-99		Th-230		Chi		Chi	
	Background		9240	dpm	20100	dpm	beta		Alpha	
	Alpha	Beta	Alpha	Beta	Alpha	Beta	x_i-t	$(x_i-t)^2$	x_i-t	$(x_i-t)^2$
1	0	63	0	1872	6739	492	-72.5	5256.25	-6321.1	39956305
2	1	70	0	1999	6833	542	54.5	2970.25	-6271.1	39326695
3	0	60	1	1938	6854	499	-6.5	42.25	-6314.1	39867859
4	0	52	0	2014	6723	501	69.5	4830.25	-6312.1	39842606
5	0	63	0	1917	6820	507	-27.5	756.25	-6306.1	39766897
6	0	55	0	1924	6811	566	-20.5	420.25	-6247.1	39026258
7	0	48	0	1934	6761	493	-10.5	110.25	-6320.1	39943664
8	0	43	1	1941	6884	564	-3.5	12.25	-6249.1	39051251
9	0	47	1	2007	6784	510	62.5	3906.25	-6303.1	39729070
10	2	93	0	1899	6922	503	-45.5	2070.25	-6310.1	39817362
11										
12										
13										
14										
15										
16										
17										
18										
19										
20										
Sum	3	594	3	19445	68131	5177				
Count	10	10	10	10	10	10				
Average	0.3	59.4	0.3	1944.5	6813.1	517.7				
Sum of squares								20374.5		3.96E+08
Chi square value								10.47801491		58171.46
N-1	9	9	9	9	9	9				

Instrument Id	121870
Model	2929
SN	121870
Counter	43-10-1
SN	126405
Cal due date	6/9/2015

Check Sources		
	Beta	Alpha
Source ID	Tc-99	Th-230
Serial #	99tcc220	11438
Half life Yrs		
Assay Date	12/14/1999	11/24/1981
Activity dpm	9240	20100
Activity cpm		

			Beta	Alpha
Efficiency			0.20402	0.338945
	alpha	beta		
MDA (1)	16.3652	190.369		

Counter 121870 Daily

Initial QC Set Up		Bkgd			Tc-99			Th-230			Net	
Source		α cpm	βγ cpm		α cpm	βγ cpm		α cpm	βγ cpm		α cpm	βγ cpm
	1	0	63		0	1872		6739	492		6739	1809
	2	1	70		0	1999		6833	542		6832	1929
	3	0	60		1	1938		6854	499		6854	1878
	4	0	52		0	2014		6723	501		6723	1962
	5	0	63		0	1917		6820	507		6820	1854
	6	0	55		0	1924		6811	566		6811	1869
	7	0	48		0	1934		6761	493		6761	1886
	8	0	43		1	1941		6884	564		6884	1898
	9	0	47		1	2007		6784	510		6784	1960
	10	2	93		0	1899		6922	503		6920	1806
Average		0	59		0	1945		6813	518		6813	1885
Tolerance		0	48		0	1556		5450	414		5450	1508
± 20%		0	71		0	2333		8176	621		8175	2262

2929#	43-10-1#	eff b	eff a
121870	**126405**	**0.2040**	**0.3389**

		Bkgd		Tc-99			Th-230			Net				2 min bkdg	
Date	Initials	α cpm	βγ cpm	α cpm	βγ cpm	Ok?	α cpm	βγ cpm	Ok?	α cpm	Ok?	βγ cpm	Ok?	α cts	βγ cts
6/16/2014	KG	0	43	1	1924	Ok	6890	503	Ok	6890	Ok	1881	Ok	0	92
6/17/2014	KG	0	30	1	1918	Ok	6901	537	Ok	6901	Ok	1888	Ok	1	77
6/18/2014	KG	0	39	1	1925	Ok	6834	488	Ok	6834	Ok	1886	Ok	1	84
6/19/2014	KG	1	35	0	1935	Ok	6753	507	Ok	6752	Ok	1900	Ok	2	81
6/20/2014	KG	0	37	1	1987	Ok	6880	554	Ok	6880	Ok	1950	Ok	1	75
6/23/2014	KG	0	43	2	1980	Ok	6829	517	Ok	6829	Ok	1937	Ok	0	74
6/24/2014	KG	0	50	0	2013	Ok	6888	523	Ok	6888	Ok	1963	Ok	0	79
6/25/2014	KG	0	42	2	1963	Ok	6872	562	Ok	6872	Ok	1921	Ok	0	72
6/26/2014	KG	0	44	0	1974	Ok	6757	511	Ok	6757	Ok	1930	Ok	2	94
6/27/2014	KG	0	45	2	1970	Ok	6840	501	Ok	6840	Ok	1925	Ok	1	94
6/30/2014	KG	0	39	2	2017	Ok	6859	546	Ok	6859	Ok	1978	Ok	0	78
7/1/2014	KG	0	48	2	1957	Ok	6883	521	Ok	6883	Ok	1909	Ok	0	93
7/2/2014	KG	0	49	0	2009	Ok	6924	494	Ok	6924	Ok	1960	Ok	0	80
7/7/2014	KG	0	39	1	2017	Ok	6840	538	Ok	6840	Ok	1978	Ok	0	78

Counter A 137607Set Up

137607	Background		Tc-99		Th-230		Chi		Chi	
			13700	dpm	19500	dpm	beta		Alpha	
	Alpha	Beta	Alpha	Beta	Alpha	Beta	x_i-t	$(x_i-t)^2$	x_i-t	$(x_i-t)^2$
1	0	48	1	2719	5908	351	74.65	5572.6225	-72.9	5314.41
2	0	63	3	2597	5948	305	-47.35	2242.0225	-32.9	1082.41
3	0	41	0	2618	6146	212	-26.35	694.3225	165.1	27258.01
4	0	55	2	2605	6024	308	-39.35	1548.4225	43.1	1857.61
5	0	41	3	2715	6053	323	70.65	4991.4225	72.1	5198.41
6	0	54	0	2595	5920	343	-49.35	2435.4225	-60.9	3708.81
7	0	42	2	2664	6125	330	19.65	386.1225	144.1	20764.81
8	0	47	3	2657	5876	340	12.65	160.0225	-104.9	11004.01
9	0	62	1	2687	5893	311	42.65	1819.0225	-87.9	7726.41
10	0	45	0	2685	6025	312	40.65	1652.4225	44.1	1944.81
11	0	47	0	2669	6023	318	24.65	607.6225	42.1	1772.41
12	0	51	3	2647	5985	311	2.65	7.0225	4.1	16.81
13	0	56	2	2758	5939	334	113.65	12916.3225	-41.9	1755.61
14	0	59	2	2655	6095	321	10.65	113.4225	114.1	13018.81
15	0	73	0	2611	5971	324	-33.35	1112.2225	-9.9	98.01
16	0	41	0	2566	5964	321	-78.35	6138.7225	-16.9	285.61
17	1	44	1	2559	5918	309	-85.35	7284.6225	-62.9	3956.41
18	0	52	1	2565	5955	309	-79.35	6296.4225	-25.9	670.81
19	0	65	0	2654	5928	338	9.65	93.1225	-52.9	2798.41
20	0	58	2	2661	5922	322	16.65	277.2225	-58.9	3469.21
Sum	1	1044	26	52887	119618	6342				
Count	20	20	20	20	20	20				
Average	0.05	52.2	1.3	2644.35	5980.9	317.1				
Sum of squares								56348.55		113701.8
Chi square value								21.30903625		19.01082
N-1	19	19	19	19	19	19				

	Beta	Alpha
Efficiency	0.18921	0.30671

	alpha	beta
MDA (1)	13.17	193.417

Instrument Id	A
Model	2929
SN	137607
Counter	43-10-1
SN	142936
Cal due date	10/3/2014

Check Sources		
	Beta	Alpha
Source ID	Tc-99	Th-230
Serial #	7181-11	7120-10
Half life Yrs		
Assay Date	3/7/2011	7/27/2010
Activity dpm	13700	19500
Activity cpm	8550	9910

Counter A 137607 Daily Check

Initial QC Set Up		Bkgd			Tc-99			Th-230			Net	
Source		α cpm	βγ cpm		α cpm	βγ cpm		α cpm	βγ cpm		α cpm	βγ cpm
	1	0	48		1	2719		5908	351		5908	2671
	2	0	63		3	2597		5948	305		5948	2534
	3	0	41		0	2618		6146	212		6146	2577
	4	0	55		2	2605		6024	308		6024	2550
	5	0	41		3	2715		6053	323		6053	2674
	6	0	54		0	2595		5920	343		5920	2541
	7	0	42		2	2664		6125	330		6125	2622
	8	0	47		3	2657		5876	340		5876	2610
	9	0	62		1	2687		5893	311		5893	2625
	10	0	45		0	2685		6025	312		6025	2640
Average		0	50		2	2654		5992	314		5992	2604
Tolerance		0	40		1	2123		4793	251		4793	2084
± 20%		0	60		2	3185		7190	376		7190	3125

2929#	43-10-1#	eff b	eff a
137607	**142936**	**0.1892**	**0.3067**

Date	Initials	Bkgd		Tc-99			Th-230			Net				2 min bkdg	
		α cpm	βγ cpm	α cpm	βγ cpm	Ok?	α cpm	βγ cpm	Ok?	α cpm	Ok?	βγ cpm	Ok?	α cts	βγ cts
11/4/2013	PA	0	40	1	2692	Ok	6005	334	Ok	6005	Ok	2652	Ok	0	79
11/5/2013	PA	0	42	2	2580	Ok	6125	320	Ok	6125	Ok	2538	Ok	1	66
11/6/2013	ARJ	0	40	1	2600	Ok	6058	267	Ok	6058	Ok	2560	Ok	0	71
11/7/2013	PA	0	55	2	2698	Ok	6092	308	Ok	6092	Ok	2643	Ok	0	109
11/8/2013	PA	0	42	1	2646	Ok	5929	324	Ok	5929	Ok	2604	Ok	0	92
11/11/2013	PA	0	47	1	2678	Ok	6120	311	Ok	6120	Ok	2631	Ok	0	89
11/12/2013	PA	0	44	1	2615	Ok	5896	300	Ok	5896	Ok	2571	Ok	0	81
11/13/2013	PA	0	43	1	2607	Ok	6050	326	Ok	6050	Ok	2564	Ok	0	86
11/14/2013	PA	0	50	2	2558	Ok	5813	312	Ok	5813	Ok	2508	Ok	0	69
11/15/2013	PA	0	37	2	2717	Ok	5955	309	Ok	5955	Ok	2680	Ok	0	87
11/18/2013	pa	0	50	2	2602	Ok	5852	346	Ok	5852	Ok	2552	Ok	0	109
11/19/2013	PA	0	48	2	2672	Ok	6143	323	Ok	6143	Ok	2624	Ok	0	89
11/20/2013	PA	0	49	1	2627	Ok	5957	304	Ok	5957	Ok	2578	Ok	0	77
11/21/2013	PA	1	32	1	2650	Ok	5960	360	Ok	5959	Ok	2618	Ok	0	85
11/22/2013	PA	0	45	0	2529	Ok	6098	320	Ok	6098	Ok	2484	Ok	1	90
11/25/2013	PA	0	34	0	2627	Ok	5781	300	Ok	5781	Ok	2593	Ok	0	93
11/26/2013	PA	0	34	2	2652	Ok	5837	334	Ok	5837	Ok	2618	Ok	0	67
11/27/2013	PA	1	51	1	2672	Ok	5864	333	Ok	5863	Ok	2621	Ok	1	82
12/2/2013	PA	0	48	1	2599	Ok	5892	322	Ok	5892	Ok	2551	Ok	0	81
12/3/2013	PA	0	46	0	2608	Ok	6111	319	Ok	6111	Ok	2562	Ok	0	84
12/4/2013	PA	0	35	1	2694	Ok	5854	356	Ok	5854	Ok	2659	Ok	0	74
12/5/2013	PA	0	34	1	2628	Ok	5964	312	Ok	5964	Ok	2594	Ok	0	78
12/6/2013	PA	1	32	2	2684	Ok	5999	384	Ok	5998	Ok	2652	Ok	0	81
12/9/2013	PA	1	39	2	2747	Ok	6011	336	Ok	6010	Ok	2708	Ok	2	68
12/10/2013	PA	1	27	2	2714	Ok	5947	331	Ok	5946	Ok	2687	Ok	0	84
12/11/2013	PA	1	44	1	2685	Ok	6000	317	Ok	5999	Ok	2641	Ok	1	80
12/12/2013	PA	0	42	0	2573	Ok	6077	323	Ok	6077	Ok	2531	Ok	0	84
12/13/2013	PA	1	42	2	2568	Ok	6013	323	Ok	6012	Ok	2526	Ok	0	81
12/16/2013	PA	1	32	1	2731	Ok	6179	324	Ok	6178	Ok	2699	Ok	0	88
12/17/2013	PA	0	31	1	2663	Ok	5928	314	Ok	5928	Ok	2632	Ok	0	75
12/18/2013	PA	0	52	1	2630	Ok	5942	288	Ok	5942	Ok	2578	Ok	0	81
12/19/2013	PA	0	28	1	2564	Ok	5828	327	Ok	5828	Ok	2536	Ok	0	95

Smear Counter B Initial Set Up

147736			Tc-99		Th-230		Chi		Chi	
	Background		13700	dpm	19500	dpm	beta		Alpha	
	Alpha	Beta	Alpha	Beta	Alpha	Beta	x_i-t	$(x_i-t)^2$	x_i-t	$(x_i-t)^2$
1	0	46	1	2641	6083	426	-87.6	7673.76	31.65	1001.722
2	0	43	3	2704	6157	443	-24.6	605.16	105.65	11161.92
3	0	43	1	2818	6115	452	89.4	7992.36	63.65	4051.322
4	0	34	1	2641	6095	47	-87.6	7673.76	43.65	1905.322
5	0	31	0	2744	5980	455	15.4	237.16	-71.35	5090.823
6	0	43	0	2709	6160	453	-19.6	384.16	108.65	11804.82
7	0	36	2	2668	6004	466	-60.6	3672.36	-47.35	2242.023
8	0	58	2	2694	5940	411	-34.6	1197.16	-111.4	12398.82
9	0	36	2	2740	6066	422	11.4	129.96	14.65	214.6225
10	0	46	2	2702	6041	426	-26.6	707.56	-10.35	107.1225
11	0	34	0	2666	5983	404	-62.6	3918.76	-68.35	4671.723
12	0	42	2	2688	6104	422	-40.6	1648.36	52.65	2772.022
13	0	32	2	2813	5996	416	84.4	7123.36	-55.35	3063.623
14	0	32	1	2763	5978	425	34.4	1183.36	-73.35	5380.223
15	0	41	2	2836	6153	405	107.4	11534.76	101.65	10332.72
16	0	41	2	2788	6217	454	59.4	3528.36	165.65	27439.92
17	1	27	0	2722	6135	492	-6.6	43.56	83.65	6997.322
18	0	40	0	2765	5933	433	36.4	1324.96	-118.4	14006.72
19	0	41	2	2686	5936	452	-42.6	1814.76	-115.4	13305.62
20	0	49	1	2784	5951	434	55.4	3069.16	-100.4	10070.12
Sum	1	0	26	54572	121027	8338				
Count	20	20	20	20	20	20				
Average	0.05	0	1.3	2728.6	6051.35	416.9				
Sum of squares								65462.8		148018.6
Chi square value								23.99135088		24.46042
N-1	19	19	19	19	19	19				

	Beta	Alpha
Efficiency	0.19917	0.31032

	alpha	beta
MDA (1 min)	13.02	15.06

Instrument Id	B
Model	2929
SN	147736
Counter	43-10-1
SN	150786
Cal due date	10/28/2014

Check Sources		
	Beta	Alpha
Source ID	Tc-99	Th-230
Serial #	7181-11	7120-10
Half life Yrs		
Assay Date	3/7/2011	7/27/2010
Activity dpm	13700	19500
Activity cpm	8550	9910

Counter 147736 Daily Check

Initial QC Set Up		Bkgd			Tc-99			Th-230			Net	
Source		α cpm	βγ cpm		α cpm	βγ cpm		α cpm	βγ cpm		α cpm	βγ cpm
	1	0	46		1	2641		6083	426		6083	2595
	2	0	43		3	2704		6157	443		6157	2661
	3	0	43		1	2818		6115	452		6115	2775
	4	0	34		1	2641		6095	47		6095	2607
	5	0	31		0	2744		5980	455		5980	2713
	6	0	43		0	2709		6160	453		6160	2666
	7	0	36		2	2668		6004	466		6004	2632
	8	0	58		2	2694		5940	411		5940	2636
	9	0	36		2	2740		6066	422		6066	2704
	10	0	46		2	2702		6041	426		6041	2656
Average		0	42		1	2706		6064	400		6064	2665
Tolerance		0	33		1	2165		4851	320		4851	2132
± 20%		0	50		2	3247		7277	480		7277	3197

2929#	43-10-1#	eff b	eff a
147736	**150786**	**0.1992**	**0.3103**

Date	Initials	Bkgd		Tc-99			Th-230			Net				2 min bkdg	
		α cpm	βγ cpm	α cpm	βγ cpm	Ok?	α cpm	βγ cpm	Ok?	α cpm	Ok?	βγ cpm	Ok?	α cts	βγ cts
Tolerance		0–1	33–50	0–2	2165–3247		4851–7277	320–480		4851–7277		2132–3197			
11/4/2013	PA	0	50	1	2801	Ok	5974	451	Ok	5974	Ok	2751	Ok	1	72
11/5/2013	PA	0	35	1	2627	Ok	6085	433	Ok	6085	Ok	2592	Ok	0	71
11/6/2013	ARJ	0	46	2	2771	Ok	5996	434	Ok	5996	Ok	2725	Ok	1	66
11/7/2013	PA	0	35	2	2694	Ok	5931	444	Ok	5931	Ok	2659	Ok	0	75
11/8/2013	PA	0	47	1	2760	Ok	6031	426	Ok	6031	Ok	2713	Ok	0	85
11/11/2013	PA	0	32	1	2826	Ok	5989	471	Ok	5989	Ok	2794	Ok	1	92
11/12/2013	PA	0	47	1	2678	Ok	6120	311	Ok	6120	Ok	2631	Ok	0	72
11/13/2013	PA	0	49	1	2787	Ok	6004	455	Ok	6004	Ok	2738	Ok	0	71
11/14/2013	PA	0	50	2	2558	Ok	5813	312	Ok	5813	Ok	2508	Ok	0	69
11/15/2013	PA	0	35	0	2754	Ok	6100	435	Ok	6100	Ok	2719	Ok	0	86
11/18/2013	PA	0	50	2	2742	Ok	5669	465	Ok	5669	Ok	2692	Ok	0	95
11/19/2013	PA	0	41	1	2833	Ok	5968	481	Ok	5968	Ok	2792	Ok	0	88
11/20/2013	PA	0	34	2	3208	Ok	5965	432	Ok	5965	Ok	3174	Ok	1	81
11/21/2013	PA	0	43	2	2768	Ok	6056	464	Ok	6056	Ok	2725	Ok	2	71
11/22/2013	PA	0	46	0	2730	Ok	5917	408	Ok	5917	Ok	2684	Ok	1	86
11/25/2013	PA	1	41	1	2787	Ok	5955	452	Ok	5954	Ok	2746	Ok	1	104
11/26/2013	PA	0	55	0	2745	Ok	6017	470	Ok	6017	Ok	2690	Ok	2	96
11/27/2013	PA	0	46	1	2763	Ok	6037	436	Ok	6037	Ok	2717	Ok	1	93
12/2/2013	PA	0	41	2	2740	Ok	5912	453	Ok	5912	Ok	2699	Ok	0	77
12/3/2013	PA	0	36	1	2739	Ok	6106	461	Ok	6106	Ok	2703	Ok	0	80
12/4/2013	PA	0	31	2	2779	Ok	5952	448	Ok	5952	Ok	2748	Ok	0	95
12/5/2013	PA	0	30	2	2814	Ok	6099	468	Ok	6099	Ok	2784	Ok	0	70
12/6/2013	PA	0	32	2	2684	Ok	6089	456	Ok	6089	Ok	2652	Ok	0	84
12/9/2013	PA	0	40	1	2833	Ok	6212	478	Ok	6212	Ok	2793	Ok	1	96
12/10/2013	PA	0	33	0	2830	Ok	5964	446	Ok	5964	Ok	2797	Ok	0	99
12/11/2013	PA	0	33	2	2881	Ok	6147	457	Ok	6147	Ok	2848	Ok	1	92

Appendix E-2-2

Radiation Daily Reports

NFSS Project 2013 Radiation Protection Daily Log

Project URDD.IDWAIE09122153: Date 110413 **Prepared** [redacted]

Weather: OVERCAST, BRISK
Personnel Onsite [redacted]
Radiological Staf [redacted]
Other: Client representative, URS IE Buffalo, RUSSO
Visitors requiring URS escort:

Instruments

Meter	SN	probe	SN	op Check (p/f)* Start	End	Area Used	Color/Notes
M12		44-9		OK		NOT USED	Frisker
M12		44-9		OK		NOT USED	Frisker
M12		44-9		OK		NOT USED	Frisker
M12	102868	44-9		OK		NOT USED	Scaler
M2241	149394	44-9		P	P	~~NOT USED~~ P/A	Scaler
M2360		43-93		F		Soils	
M2221		44-10				Trenches/sides	Shielded
M2221		44-10				Trenches/bottom	Shielded
M2221	148443	44-10	150422				
M2221	147508	44-10	149451	P	P		
M19	144060	---		P			Dose Rate
M2929		43-10-1		P		Smears	Smear Counter
M2929		43-10-1		P		Smears	Smear Counter

***See daily operation check spreadsheet**

Work Performed: (Information is recorded on project data sheets and is not repeated in this log.)

Time	Activity
0800	GWS
1500	INCOMING COOLER SURVEY

Radiation, or Health, & Safety Items
N/A

Problems/Issues
AWAITING DOSIMETERS

NFSS Project 2013 Radiation Protection Daily Log

Project URDD.IDWAIE09122153: **Date** 110513 **Prepared By** [redacted]

Weather: SU[redacted]
Personnel Onsi[redacted]
Radiological St[redacted]
Other: Client representative, URS IE Buffalo, Russo
Visitors requiring URS escort: None

Instruments

Meter	SN	probe	SN	op Check (p/f)* Start	End	Area Used	Color/Notes
M12	229277	44-9	125462	P	F	DRILLING	Frisker
M12	281910	44-9	308451	P		NOT USED	Frisker
M12	281980	44-9	308446	P	P	DRILLING	Frisker
M12	102868	44-9		P	P	~~NR~~ SOILS	Scaler
M2241	149394	44-9	251672			NOT USED	Scaler
M2360	276943	43-93	197430	P	P	Soils	
M2221	138377	44-10	198936	P		~~Trenches/sides~~ DA NOT USED	Shielded
M2221	254783	44-10	150745	P		~~Trenches/bottom~~ NOT USED	Shielded
M2221	148443	44-10	150422	P	P	DRILLING	
M2221	147508	44-10	149451	P	P	GPS WALKOVER	
M19	144060	---				NOT USED	Dose Rate
M2929		43-10-1				Smears	Smear Counter
M2929		43-10-1				Smears	Smear Counter

*See daily operation check spreadsheet

Work Performed: (Information is recorded on project data sheets and is not repeated in this log.)

Time	Activity
0800	INCOMING EQUIPMENT SURVEYS
1420	DRILLING, SAMPLING
	issued Dosimetry
	GWS

Radiation, or Health, & Safety Items

Problems/Issues
GREEN FRISKER NOT FUNCTION, METER HAS MAXED OUT.

NFSS Project 2013 Radiation Protection Daily Log

Project URDD.IDWAIE09122153: Date 110613 **Prepared By** [redacted]

Weather: SUNNY & WARM
Personnel Onsite [redacted]
Radiological Staf [redacted]
Other: Client representative, URS IE Buffa [redacted]
Visitors requiring URS escort:

Instruments

Meter	SN	probe	SN	op Check (p/f)* Start	End	Area Used	Color/Notes
M12	229277	44-9	125462	OUT OFF		SERVICE	Green Frisker
M12	281910	44-9	308451	P		DRILLER	White Frisker
M12	281980	44-9	308445	P		SAMPLING	Red Frisker
M12	102868	44-9	15129	P		SAMPLING	Scaler
M2241	149394	44-9	251672	P			Blue Scaler
M2360	276943	43-93	197430	P		SAMPLING	Soils
M2221	138377	44-10	198936	P		NOT USED	Blue Shielded
M2221	254783	44-10	150745	P		NOT USED	Yellow Shielded
M2221	148443	44-10	150422	P		SAMPLING	Green
M2221	147508	44-10	149451	P		GPS Walkover surveys	Red GPS
M19	144060	---	N/A	P			Dose Rate
M2929	137607	43-10-1	142936	P	N/A	Smears	Smear Counter A
M2929	147736	43-10-1	150788	P	N/A	Smears	Smear Counter B

***See daily operation check spreadsheet**

Work Performed: (Information is recorded on project data sheets and is not repeated in this log.)

Time	Activity
~~0800~~ P.7	0700 DAILY OP CHECKS.
	SAMPLING
	GAMMA WALKOVER SURVEYS
	INCOMING COOLER
	DOT OUTGOING COOLER
1730	END OF DAY OP CHECKS

Radiation, or Health, & Safety Items

Problems/Issues
M12 GREEN FRISKER OUT OF SERVICE
2360 FAILED. REPLACEMENT MYLAR ORDER

NFSS Project 2013 Radiation Protection Daily Log

Project URDD.IDWAIE09122153: Date 110713 **Prepared** [redacted]

Weather: COOL, PARTLY CLOUDY
Personnel Onsite [redacted]
Radiological Staff [redacted]
Other: Client representative, URS IE Buffalo. [redacted]
Visitors requiring URS escort: None

Instruments

Meter	SN	probe	SN	op Check (p/f)* Start	End	Area Used	Color/Notes
M12	229277	44-9	125462	~~P~~ PA	OUT	OF SERVICE	Green Frisker
M12	281910	44-9	308451	P	P	SOILS	White Frisker
M12	281980	44-9	308445	P	P	SOILS	Red Frisker
M12	102868	44-9	15129	P	P	SOILS	Scaler
M2241	149394	44-9	251672	P	P	NOT USED	Blue Scaler
M2360	276943	43-93	197430	OUT OF	SERVICE		Soils
M2221	138377	44-10	198936	P	P	NOT USED	Blue Shielded
M2221	254783	44-10	150745	P	P	NOT USED	Yellow Shielded
M2221	148443	44-10	150422	P	P	SOILS	Green
M2221	147508	44-10	149451	P	P	GPS Walkover surveys	Red GPS
M19	144060	---		P	P	NOT USED	Dose Rate
M2929	137607	43-10-1	142936	P	N/A	Smears	Smear Counter A
M2929	147736	43-10-1	150788	P	N/A	Smears	Smear Counter B

***See daily operation check spreadsheet** P Used
m2360

Work Performed: (Information is recorded on project data sheets and is not repeated in this log.)

Time	Activity
0700	OP CHECKS
	GWS
	SAMPLING
	IQ/OQ
1800	END OF DAY OP CHECKS

Radiation, or Health, & Safety Items
Recieved replacement Mylars and instrument for 4393.
Issued RWP for Rob to package samples which were stored while waiting for replacement instrument.

Problems/Issues
GREEN FRISKER OUT OF SERVICE
Repaired m2360 and set up new 2360

NFSS Project 2013 Radiation Protection Daily Log

Project URDD.IDWAIE09122153: Date 110813 **Prepared** [redacted]

Weather: CHILLY, OVERCAST

Personnel Onsite [redacted]

Radiological Staff [redacted]

Other: Client representative, URS IE Buffalo, Russo Driller and Mechanic

Visitors requiring URS escort: Russo Mechanic

Instruments

Meter	SN	probe	SN	op Check (p/f)* Start	End	Area Used	Color/Notes
M12	229277	44-9	125462	~~P~~ OUT OF		SERVICE	Green Frisker
M12	281910	44-9	308451	P	P	SOILS	White Frisker
M12	281980	44-9	308445	P	P	SOILS	Red Frisker
M12	102868	44-9	15129	P	P	SOILS	Scaler
M2241	149394	44-9	251672	P		NOT USED	Blue Scaler
M2360	276943	43-93	197430	P		MYLAR DAMAGED	Soils
M2221	138377	44-10	198936	P		NOT USED	Blue Shielded
M2221	254783	44-10	150745	P		NOT USED	Yellow Shielded
M2221	148443	44-10	150422	P	P	SOILS	Green
M2221	147508	44-10	149451	P	P	GPS Walkover surveys	Red GPS
M19	144060	---		P	P	SURVEY-OUTGOING	Dose Rate
M2929	137607	43-10-1	142936	P	N/A	Smears	Smear Counter A
M2929	147736	43-10-1	150788	P	N/A	Smears	Smear Counter B

*See daily operation check spreadsheet

M2360 220446 43.93 199826 P P SOILS

Work Performed: (Information is recorded on project data sheets and is not repeated in this log.)

Time	Activity
0700	MORNING OP CHECKS
	SOIL SAMPLING
1700	SURVEY DRILLING RIG FOR REPAIR
	GWS in EU1 was postponed as area needs additional
	Clearing moved to location close
	Client HP was on site and had questions regarding Sample Count times

Radiation, or Health, & Safety Items

Escorted Mechanic to repair ~~the~~ rig.
Rob Murphy took his dosimeter offsite.

Problems/Issues

GREEN FRISKER OUT OF SERVICE
MYLAR DAMAGED 220246 DURING SAMPLE COUNT.
DRILL RIG HYDRAULIC LEAK required a partial release survey of rig to allow the mechanic to repair. the mechanic was escorted to ensure he complied with site requirements.
Replaced Mylar on 2nd 2360

NFSS Project 2013 Radiation Protection Daily Log

Project URDD.IDWAIE09122153: **Date** 11-11-13 **Prepared By** [redacted]

Weather: COLD, SUNNY TO OVERCAST, light rain
Personnel Onsite [redacted]
Radiological Staff
Other: Client representative, URS IE Buffalo, Russo Driller
Visitors requiring URS escort: None

Instruments

Meter	SN	probe	SN	op Check (p/f)* Start	End	Area Used	Color/Notes
M12	229277	44-9	125462	OUT OF		SERVICE	Green Frisker
M12	281910	44-9	308451	P	P	SOILS	White Frisker
M12	281980	44-9	308445	P	P	SOILS	Red Frisker
M12	102868	44-9	15129	P	P	SOILS	Scaler
M2241	149394	44-9	251672	P	NOT	USED	Blue Scaler
M2360	276943	43-93	197430	P	P	SOILS	Soils
M2221	138377	44-10	198936	P	NOT	USED	Blue Shielded
M2221	254783	44-10	150745	P	NOT	USED	Yellow Shielded
M2221	148443	44-10	150422	P	P	SOILS	Green
M2221	147508	44-10	149451	P	P	GPS Walkover surveys	Red GPS
M19	144060	---		P	P	OUTGOING DOT	Dose Rate
M2929	137607	43-10-1	142936	P	N/A	Smears	Smear Counter A
M2929	147736	43-10-1	150788	P	N/A	Smears	Smear Counter B

***See daily operation check spreadsheet**

Work Performed: (Information is recorded on project data sheets and is not repeated in this log.)

Time	Activity
0700	OP CHECK - START OF DAY
	OUTGOING DOT SURVEY
	SAMPLING MH-06 AREA
	GWS in EU7 area is very wet w/ some standing water
1715	OP CHECK END OF DAY

Radiation, or Health, & Safety Items
Buff-3 Dosimeter still offsite

Problems/Issues
GREEN FRISKER OUT OF SERVICE
Unable to locate the 100K area near GWS-6.
2360 220416 is missing a screw as a result of the mylar replacement. will get replacement.

NFSS Project 2013 Radiation Protection Daily Log

Project URDD.IDWAIE09122153: **Date** 11/12/13 **Prepared** [redacted]

Weather: COOL, OVERCAST
Personnel Onsite
Radiological Staff [redacted]
Other: Client representative, URS IE Buffalo, RUSSO
Visitors requiring URS escort:

Instruments

Meter	SN	probe	SN	op Check (p/f)* Start	End	Area Used	Color/Notes
M12	229277	44-9	125462	~~P~~	OUT OF SERVICE		Green Frisker
M12	281910	44-9	308451	P	P	SOILS	White Frisker
M12	281980	44-9	308445	P	P	SOILS	Red Frisker
M12	102868	44-9	15129	P	NOT USED		Scaler
M2241	149394	44-9	251672	P	NOT USED		Blue Scaler
M2360	276943	43-93	197430	P	P	SOILS	Soils
M2221	138377	44-10	198936	P	—	NOT USED	Blue Shielded
M2221	254783	44-10	150745	P	—	NOT USED	Yellow Shielded
M2221	148443	44-10	150422	P	P	SOILS	Green
M2221	147508	44-10	149451	P	P	GPS Walkover surveys	Red GPS
M19	144060	---		P	P	DOT SURVEY	Dose Rate
M2929	137607	43-10-1	142936	P	N/A	Smears	Smear Counter A
M2929	147736	43-10-1	150788	P	N/A	Smears	Smear Counter B

***See daily operation check spreadsheet**
M2360 220246 43-93

Work Performed: (Information is recorded on project data sheets and is not repeated in this log.)

Time	Activity
0700	DAILY OP CHECKS
	DOT OUTGOING
	SOIL SAMPLING
	INITIAL SETUP 2360
	GWS IN EU8 and EU7
1700	END OF DAY

Radiation, or Health, & Safety Items
BUF 3 DOSIMETRY OFFSITE
issued Buff4 dosimeter [redacted]

Problems/Issues
~~BUF 3 DOSIMETRY OFFSITE~~ DA
M2360 S/N 220246 SCREW MISSING
GREEN FRISKER OUT OF SERVICE
GWS Pt in EU7 were not at expected levels readings were up to 14K and looking for a 42K

NFSS Project 2013 Radiation Protection Daily Log

Project URDD.IDWAIE09122153: Date 11/13/13 Prepared By [redacted]

Weather: COLD, SUNNY
Personnel Onsite
Radiological Staff: [redacted]
Other: Client representative, URS IE Buffalo, RUSSO
Visitors requiring URS escort:

Instruments

Meter	SN	probe	SN	op Check (p/f)* Start	End	Area Used	Color/Notes
M12	281910	44-9	308451	P	P	SOILS	White Frisker
M12	281980	44-9	308445	P	P	SOILS	Red Frisker
M12	102868	44-9	15129	P	P	SOILS	Scaler
M2241	149394	44-9	251672	P	NOT	USED	Blue Scaler
M2360	276943	43-93	197430	P	P	SOILS	
M2360	220246	43-93	199826	—			
M2221	138377	44-10	198936	P	—	NOT USED	Blue Shielded
M2221	254783	44-10	150745	P	—	NOT USED	Yellow Shielded
M2221	148443	44-10	150422	P	P	SOILS	Green
M2221	147508	44-10	149451	P	P	GPS Walkover surveys	Red GP5
M19	144060	---		P	P	DOT SURVEY	Dose Rate
M2929	137607	43-10-1	142936	P	N/A	Smears	Smear Counter A
M2929	147736	43-10-1	150788	P	N/A	Smears	Smear Counter B

*See daily operation check spreadsheet

Work Performed: (Information is recorded on project data sheets and is not repeated in this log.)

Time	Activity
0700	OP CHECKS. START
	SOIL SAMPLING
	GWS
	DOT OUTGOING
	OP CHECKS END OF DAY

[redacted] DOSIMETRY BADGE OFFSITE

Problems/Issnes
GPS Cable failure ordered replacement

NFSS Project 2013 Radiation Protection Daily Log

Project URDD.IDWAIE09122153: Date 11/14/13 **Prepared By** [redacted]

Weather: SUNNY, COLD, WINDY
Personnel Onsite
Radiological Staff [redacted]
Other: Client representative, URS IE Buffalo, ROSSO
Visitors requiring URS escort:

Instruments

Meter	SN	probe	SN	op Check (p/f)* Start	End	Area Used	Color/Notes
M12	281910	44-9	308451	P	P	SOILS	White Frisker
M12	281980	44-9	308445	P	P	SOILS	Red Frisker
M12	102868	44-9	15129	P	P	SOILS/DOT SURVEY	Scaler
M2241	149394	44-9	251672	P	NOT	USED	Blue Scaler
M2360	276943	43-93	197430	P	P	SOILS	
M2360	220246	43-93	199826	P	NOT	USED	
M2221	138377	44-10	198936	P	NOT	USED	Blue Shielded
M2221	254783	44-10	150745	P	NOT	USED	Yellow Shielded
M2221	148443	44-10	150422	P	P	SOILS	Green
M2221	147508	44-10	149451	P	P	GPS Walkover surveys	Red GPS
M19	144060	---		P	P	DOT SURVEY	Dose Rate
M2929	137607	43-10-1	142936	P	N/A	Smears	Smear Counter A
M2929	147736	43-10-1	150788	P	N/A	Smears	Smear Counter B

*See daily operation check spreadsheet

Work Performed: (Information is recorded on project data sheets and is not repeated in this log.)

Time	Activity
0700	OP CHECKS
	DOT OUTGOING
	GWS Surveys of EU1 & EU2
	SAMPLING
1700	OP CHECKS

Radiation, or Health, & Safety Items

Problems/Issues
[redacted] DOSIMETER BADGE OFF SITE
GPS CABLE DAMAGED received replacement Cable

NFSS Project 2013 Radiation Protection Daily Log

Project URDD.IDWAIE09122153: Date 11/15/13 Prepared [redacted]

Weather: SUNNY, MILD

Personnel Onsite

Radiological Staff: [redacted]

Other: Client representative, URS IE Buffalo, RUSSO

Visitors requiring URS escort: [redacted]

Instruments

Meter	SN	probe	SN	op Check (p/f)* Start	End	Area Used	Color/Notes
M12	281910	44-9	308451	P	P	SOILS	White Frisker
M12	281980	44-9	308445	P	P	SOILS	Red Frisker
M12	102868	44-9	15129	P	P	SOILS/DOT SURVEY	Scaler
M2241	149394	44-9	251672	P	NOT USED		Blue Scaler
M2360	276943	43-93	197430	P	NOT USED		
M2360	220246	43-93	199826	P	P	SOILS	
M2221	138377	44-10	198936	P	NOT USED		Blue Shielded
M2221	254783	44-10	150745	P	NOT USED		Yellow Shielded
M2221	148443	44-10	150422	P	P	SOILS	Green
M2221	147508	44-10	149451	P	P	GPS Walkover surveys	Red GPS
M19	144060	---	—	P	P	DOT SURVEY	Dose Rate
M2929	137607	43-10-1	142936	P	N/A	Smears	Smear Counter A
M2929	147736	43-10-1	150788	P	N/A	Smears	Smear Counter B

*See daily operation check spreadsheet

Work Performed: (Information is recorded on project data sheets and is not repeated in this log.)

Time	Activity
0700	OP CHECKS - START
	BACKFILLING BORE HOLES
	DOT SURVEY
	GWS
1700	OP CHECKS - END OF DAY

Radiation, or Health, & Safety Items

[redacted] BADGE OFFSITE, NEW RCT MIKE LESTER STARTING

Problems/Issues

NFSS Project 2013 Radiation Protection Daily Log

Project URDD.IDWAIE091221S3: **Date** 11/18/13 **Prepared** [redacted]

Weather: OVERCAST, MODERATE, HIGH WINDS
Personnel Onsite
Radiological Staff: [redacted]
Other: Client representative, URS IE Buffalo, Russo, [redacted]
Visitors requiring URS escort: HAZMAT

Instruments

Meter	SN	probe	SN	op Check (p/f)* Start	End	Area Used	Color/Notes
M12	281910	44-9	308451	P	P	SOILS	White Frisker
M12	281980	44-9	308445	P	P	OUTGOING/INCOMING	Red Frisker
M12	102868	44-9	15129	P	P	SOILS	Scaler
M2241	149394	44-9	251672	P	NOT	USED	Blue Scaler
M2360	276943	43-93	197430	P	P	SOILS	
M2360	220246	43-93	199826	P	NOT	USED	
M2221	138377	44-10	198936	P	NOT	USED	Blue Shielded
M2221	254783	44-10	150745	P	NOT	USED	Yellow Shielded
M2221	148443	44-10	150422	P	P	SOILS	Green
M2221	147508	44-10	149451	P	P	GPS Walkover surveys	Red GPS
M19	144060	---	—	P	P	OUTGOING	Dose Rate
M2929	137607	43-10-1	142936	P	N/A	Smears	Smear Counter A
M2929	147736	43-10-1	150788	P	N/A	Smears	Smear Counter B

*See daily operation check spreadsheet

Work Performed: (Information is recorded on project data sheets and is not repeated in this log.)

Time	Activity
0700	OP CHECKS
	SAMPLING SOILS
	DOT SURVEY
	GWS
	INCOMING ROLL OFF
17	OP CHECKS
	INCOMING SET UP M3 FRISKER

Radiation, or Health, & Safety Items
[redacted] BADGE OFF SITE

Problems/Issues
GPS did not Charge over the weekend.

NFSS Project 2013 Radiation Protection Daily Log

Project URDD.IDWAIE09122153: **Date** 11/19/13 **Prepared** [redacted]

Weather: OVERCAST, CHILLY
Personnel Onsite
Radiological Staff: [redacted] L[redacted]
Other: Client representative, URS IE Buffalo, RUSSO
Visitors requiring URS escort:

Instruments

Meter	SN	probe	SN	op Check (p/f)* Start	End	Area Used	Color/Notes
M12	281910	44-9	308451	P	P	SOILS	White Frisker
M12	281980	44-9	30844S	P	P	Cooler / Excavator	Red Frisker
M12	102868	44-9	15129	P	P	SOILS	Scaler
M2241	149394	44-9	251672	P	NOT USED		Blue Scaler
M2360	276943	43-93	197430	P	P	SOILS	
M2360	220246	43-93	199826	P	NOT USED		
M2221	138377	44-10	198936	P	—	NOT USED	Blue Shielded
M2221	254783	44-10	150745	P	—	NOT USED	Yellow Shielded
M2221	148443	44-10	150422	P	D	SOILS	Green
M2221	147508	44-10	149451	P	P	GPS Walkover surveys	Red GPS
M19	144060	---	—	P	P	DOT SURVEY	Dose Rate
M2929	137607	43-10-1	142936	P	N/A	Smears	Smear Counter A
M2929	147736	43-10-1	150788	D	N/A	Smears	Smear Counter B

***See daily operation check spreadsheet**

Work Performed: (Information is recorded on project data sheets and is not repeated in this log.)

Time	Activity
0700	OP CHECKS - START
	DOT SURVEY
	SOIL SAMPLING
	GWS
	INCOMING EQUIPMENT SURVEYS
	RELOCATE WASTE TO ROLLOFF
1730	OP CHECKS - END

Radiation, or Health, & Safety Items
[redacted] BADGE OFFSITE, [redacted] BADGE RETURNED.
EXCAVATOR DELIVERED TO SITE.

Problems/Issues
Developed the equipment to support the detector for Side Wall scans
Still need to work out some issuses
GPS Charger issue was resolved.

NFSS Project 2013 Radiation Protection Daily Log

Project URDD.IDWAIE09122153: **Date** 11/20/13 **Prepared** [redacted]

Weather: COLD, PARTLY CLOUDY
Personnel Onsite [redacted]
Radiological Staff: [redacted]
Other: Client representative, URS IE Buffalo, RUSSO, NYDEC
Visitors requiring URS escort: RUSSO TRUCK DRIVER

Instruments

Meter	SN	probe	SN	op Check (p/f)* Start	End	Area Used	Color/Notes
M12	281910	44-9	308451	P	P	SOILS	White Frisker
M12	281980	44-9	308445	P	P	INCOMING/DOT SURVEY	Red Frisker
M12	102868	44-9	15129	P	P	SOILS	Scaler
M2241	149394	44-9	251672	P	N/U		Blue Scaler
M2360	276943	43-93	197430	P	P	INCOMING	BLUE
M2360	220246	43-93	199826	P	P	SOILS	GREEN
M2221	138377	44-10	198936	P	N/U		Blue Shielded
M2221	254783	44-10	150745	P	N/U		Yellow Shielded
M2221	148443	44-10	150422	P	P	SOILS	Green
M2221	147508	44-10	149451	P	P	GPS Walkover surveys	Red GPS
M19	144060	---	——	P	P	DOT SURVEY	Dose Rate
M2929	137607	43-10-1	142936	P	N/A	Smears	Smear Counter A
M2929	147736	43-10-1	150788	P	N/A	Smears	Smear Counter B

*See daily operation check spreadsheet
M3 44-9 042780 P

Work Performed: (Information is recorded on project data sheets and is not repeated in this log.)

Time	Activity
0700	OP CHECKS - START
	DOT SURVEY
	INCOMING SURVEY
	SOIL BORING / GWS
1730	OP CHECKS - END

Radiation, or Health, & Safety Items

Problems/Issues

NFSS Project 2013 Radiation Protection Daily Log

Project URDD.IDWAIE09122153: **Date** 11.21.13 **Prepared By** [redacted]

Weather: PARTLY CLOUDY, MILD
Personnel Onsite [redacted]
Radiological Sta [redacted]
Other: Client representative, URS IE Buffalo, RUSSO, NYDEC
Visitors requiring URS escort:

Instruments

Meter	SN	probe	SN	op Check (p/f)* Start	End	Area Used	Color/Notes
M12	281910	44-9	308451	P	P	SOILS	White Frisker
M12	281980	44-9	308445	P	P	EXCAVATION	Red Frisker
M12	102868	44-9	15129	P	P	SOILS	Scaler
M2241	149394	44-9	251672	P	NOT USED		Blue Scaler
M2360	276943	43-93	197430	P	P	~~SOI~~ P/A NOT USED	
M2360	220246	43-93	199826	P	P	SOILS	
M2221	138377	44-10	198936	P	NOT USED		Blue Shielded
M2221	254783	44-10	150745	P	NOT USED		Yellow Shielded
M2221	148443	44-10	150422	P	P	~~EXCAT~~ P/A EXCAVATION	Green
M2221	147508	44-10	149451	P		GPS Walkover surveys	Red GPS
M19	144060	---	—	P	P	DOT SURVEY	Dose Rate
M2929	137607	43-10-1	142936	P	N/A	Smears	Smear Counter A
M2929	147736	43-10-1	150788	P	N/A	Smears	Smear Counter B

*See daily operation check spreadsheet
M3 414.9 042780 P

Work Performed: (Information is recorded on project data sheets and is not repeated in this log.)

Time	Activity
0700	OP CHECKS - START
	SOIL BORING/SAMPLES
	EXCAVATION OF TEST PITS/MAN HOLE REMOVAL
	DOT OUTGOING
	GWS
	INCOMING EQUIPMENT SURVEY
1730	INSTRUMENT SET UP

Radiation, or Health, & Safety Items

Problems/Issues

NFSS Project 2013 Radiation Protection Daily Log

Project URDD.IDWAIE09122153: **Date** 112213 **Prepared By** [redacted]

Weather: OVERCAST, RAINY
Personnel Onsite
Radiological Staff: [redacted]
Other: Client representative, URS IE Buffalo, RUSSO
Visitors requiring URS escort:

Instruments

Meter	SN	probe	SN	op Check (p/f)* Start	End	Area Used	Color/Notes
M12	281910	44-9	308451	P	P	SOILS	White Frisker
M12	281980	44-9	308445	P	Not Used	~~EXCAVATION~~ PA	Red Frisker
M12	102868	44-9	15129	P	P	SOILS	Scaler
M2241	149394	44-9	251672	P	NOT USED		Blue Scaler
M2360	276943	43-93	197430	P	NOT USED		
M2360	220246	43-93	199826	P	P	SOILS	
M2221	138377	44-10	198936	P	NOT USED		Blue Shielded
M2221	254783	44-10	150745	P	P	EXCAVATION	Yellow Shielded
M2221	148443	44-10	150422	P	Not Used	~~EXCAVATION~~ PA	Green
M2221	147508	44-10	149451	P	P	GP5 Walkover surveys	Red GPS
M19	144060	---	—	P	P	DOT SURVEY	Dose Rate
M2929	137607	43-10-1	142936	P	N/A	Smears	Smear Counter A
M2929	147736	43-10-1	150788	P	N/A	Smears	Smear Counter B
M2350	186168	44-10	164157	P	P	SOILS	
M3	51256	44-9	042780	P	P	with excavators	Frisking

*See daily operation check spreadsheet

Work Performed: (Information is recorded on project data sheets and is not repeated in this log.)

Time	Activity
0700	OP CHECKS - START
	DOT SURVEY
	SOIL BORING
	EXCAVATION / SURVEY MH6
	OP CHECKS - END
1700	GWS

Radiation, or Health, & Safety Items

Problems/Issues

NFSS Project 2013 Radiation Protection Daily Log

Project URDD.IDWAIE09122153: Date 11 25 13 **Prepare** [redacted]

Weather: COLD, SUNNY

Personnel Onsite [redacted]

Radiological Staff
Other: Client representative, URS IE Buffalo, RUSSO
Visitors requiring URS escort:

Instruments

Meter	SN	probe	SN	op Check (p/f)* Start	End	Area Used	Color/Notes
M12	281910	44-9	308451	P	P	SOIL SAMPLING/DOT	White Frisker
M12	281980	44-9	308445	P	P	EXCAVATION	Red Frisker
M3	51526	44-9	042780	P	NOT USED		Yellow Frisker
M12	102868	44-9	15129	P	P	SOIL SAMPLING	Yellow Scaler
M2241	149394	44-9	251672	P	NOT USED		Blue Scaler
M2360	276943	43-93	197430	P	NOT USED		Blue
M2360	220246	43-93	199826	P	P	SOIL SAMPLING	Green
M2221	138377	44-10	198936	P	P	EXCAVATION	Blue Shielded
M2221	254783	44-10	150745	P	NOT USED		Yellow Shielded
M2221	148443	44-10	150422	P	P	EXCAVATION	Green
M2221	147508	44-10	149451	P	P	SOIL SAMPLING	Red
M2350	186198	44-10	164157	VAP	NOT USED		Whit
M19	144060	---	-------	P	P	DOT SURVEY	Dose Rate
M2929	137607	43-10-1	142936	P	N/A	Smears	Smear Counter A
M2929	147736	43-10-1	150788	P	N/A	Smears	Smear Counter B

***See daily operation check spreadsheet**

Work Performed: (Information is recorded on project data sheets and is not repeated in this log.)

Time	Activity
0700	OP CHECKS START
	DOT OUTGOING
	EXCAVATION / DEWATERING
	SOIL SAMPLING
	~~INCOMING SURVEY - BAKER TANK~~ PD
1730	OP CHECKS - END

Radiation, or Health, & Safety Items

Problems/Issues

BAKER TANK DELIVERED TO SITE.

NFSS Project 2013 Radiation Protection Daily Log

Project URDD.IDWAIE09122153: Date 11/26/~~14~~ 13 **Prepared By** [redacted]

Weather: COLD, OVERCAST, ~~LIGHT SN~~ PA LITE SNOW OF GROUND

Personnel Onsite

Radiological Staff: [redacted]
Other: Client representative, URS IE Buffalo, RUSSO
Visitors requiring URS escort:

Instruments

Meter	SN	probe	SN	op Check (p/f)* Start	End	Area Used	Color/Notes
M12	281910	44-9	308451	P	P	SOIL SAMPLING	White Frisker
M12	281980	44-9	308445	P	P	EXCAVATION	Red Frisker
M3	51526	44-9	042780	P	NOT	USED	Yellow Frisker
M12	102868	44-9	15129	P	P	SOIL SAMPLING	Yellow Scaler
M2241	149394	44-9	251672	P	NOT	USED	Blue Scaler
M2360	276943	43-93	197430	P	NOT	USED	Blue
M2360	220246	43-93	199826	P	P	SOIL SAMPLING	Green
M2221	138377	44-10	198936	P	P	EXCAVATION	Blue Shielded
M2221	254783	44-10	150745	P	P	EXCAVATION	Yellow Shielded
M2221	148443	44-10	150422	P	P	~~SO~~ PA EXCAVATION	Green
M2221	147508	44-10	149451	P	P	SOIL SAMPLING	Red
M2350	186198	44-10	164157	OUT OF SERVICE			Whit
M19	144060	---	-------	P	P	DOT SURVEY	Dose Rate
M2929	137607	43-10-1	142936	P	N/A	Smears	Smear Counter A
M2929	147736	43-10-1	150788	P	N/A	Smears	Smear Counter B

*See daily operation check spreadsheet

Work Performed: (Information is recorded on project data sheets and is not repeated in this log.)

Time	Activity
0700	OP CHECKS START
	INCOMING SURVEY. FRAC TANK
	WATER RELOCATED TO FRAC TANK
	SOIL SAMPLING
	OP CHECK END
1730	EXCAVATION

Radiation, or Health, & Safety Items
2350 TAKEN OUT OF SERVICE. CABLE NEEDED FOR 2221

Problems/Issues

NFSS Project 2013 Radiation Protection Daily Log

Project URDD.IDWAIE09122153: Date 112713 **Prepared** [redacted]

Weather: COLD, SNOW ACCUMULATED

Personnel Onsite [redacted]

Radiological Staff
Other: Client representative, URS IE Buffalo, ROSSO
Visitors requiring URS escort:

Instruments

Meter	SN	probe	SN	op Check (p/f)* Start	End	Area Used	Color/Notes
M12	281910	44-9	308451	P	P	SOIL SAMPLING	White Frisker
M12	281980	44-9	308445	P	P	EXCAVATION	Red Frisker
M3	51526	44-9	042780	D	NOT	USED	Yellow Frisker
M12	102868	44-9	15129	P	D	SOIL SAMPLING	Yellow Scaler
M2241	149394	44-9	251672	D	NOT USED		Blue Scaler
M2360	276943	43-93	197430	P			Blue
M2360	220246	43-93	199826	P	P	SOIL SAMPLING	Green
M2221	138377	44-10	198936	P	N/U	~~EXCAVATION~~ P/A	Blue Shielded
M2221	254783	44-10	150745	P	N/U	~~EXCAVATION~~ P/A	Yellow Shielded
M2221	148443	44-10	150422	P	N/U	~~EXCAVATION~~ P	Green
M2221	147508	44-10	149451	P	P	SOIL SAMPLING	Red
M2350	186198	44-10	164157	OUT	OF	SERVICE	Whit
M19	144060	---	-------	P	P	DOT SURVEY	Dose Rate
M2929	137607	43-10-1	142936	P	N/A	Smears	Smear Counter A
M2929	147736	43-10-1	150788	P	N/A	Smears	Smear Counter B

*See daily operation check spreadsheet

Work Performed: (Information is recorded on project data sheets and is not repeated in this log.)

Time	Activity
0700	OP CHECK - START
	~~EXCAVATION~~ P/A
	SOIL SAMPLING
	DOT SURVEY
	DOSE RATE WASTE ACCUMULATION / FRAC TANK
1700	OP CHECKS - END

Radiation, or Health, & Safety Items

Problems/Issues

NFSS Project 2013 Radiation Protection Daily Log

Project URDD.IDWAIE09122153: Date 12/2/13 **Prepared** [redacted]

Weather: PARTLY CLOUDY, MILD

Personnel Onsite

Radiological Staff: [redacted]
Other: Client representative, URS IE Buffalo, RUSSO
Visitors requiring URS escort:

Instruments

Meter	SN	probe	SN	op Check (p/f)* Start	End	Area Used	Color/Notes
M12	281910	44-9	308451	P	P	SOIL SAMPLING	White Frisker
M12	281980	44-9	308445	P	P	EXCAVATION	Red Frisker
M3	51526	44-9	042780	P	NOT	USED	Yellow Frisker
M12	102868	44-9	15129	P	P	SOIL SAMPLING	Yellow Scaler
M2241	149394	44-9	251672	P	NOT	USED	Blue Scaler
M2360	276943	43-93	197430	P	NOT	USED	Blue
M2360	220246	43-93	199826	P	P	SOIL SAMPLING	Green
M2221	138377	44-10	198936	P	P	EXCAVATION	Blue Shielded
M2221	254783	44-10	150745	P	P	EXCAVATION	Yellow Shielded
M2221	148443	44-10	150422	P	P	EXCAVATION	Green
M2221	147508	44-10	149451	P	P	SOIL SAMPLING	Red
M2350	186198	44-10	164157	OUT	OF	SERVICE	Whit
M19	144060	---	-------	P	P	DOT	Dose Rate
M2929	137607	43-10-1	142936	P	N/A	Smears	Smear Counter A
M2929	147736	43-10-1	150788	P	N/A	Smears	Smear Counter B

***See daily operation check spreadsheet**

Work Performed: (Information is recorded on project data sheets and is not repeated in this log.)

Time	Activity
0700	OP CHECK-START
	DOT OUTGOING SURVEY
	SOIL BORING/SAMPLING
	EXCAVATION
1700	OP CHECK-END

Radiation, or Health, & Safety Items

Problems/Issues

NFSS Project 2013 Radiation Protection Daily Log

Project URDD.IDWAIE09122153: Date 120313 **Prepared B** [redacted]

Weather: SUNNY, BRISK

Personnel Onsite

Radiological Staff: [redacted]
Other: Client representative, URS IE Buffalo, RUSSO
Visitors requiring URS escort:

Instruments

Meter	SN	probe	SN	op Check (p/f)* Start	End	Area Used	Color/Notes
M12	281910	44-9	308451	P	P	SOIL SAMPLING	White Frisker
M12	281980	44-9	308445	P	P	EXCAVATION	Red Frisker
M3	51526	44-9	042780	P	NOT	USED	Yellow Frisker
M12	102868	44-9	15129	P	P	SOIL SAMPLING	Yellow Scaler
M2241	149394	44-9	251672	P	NOT	USED	Blue Scaler
M2360	276943	43-93	197430	P	NOT	USED	Blue
M2360	220246	43-93	199826	P	P	SOIL SAMPLING	Green
M2221	138377	44-10	198936	P	P	EXCAVATION	Blue Shielded
M2221	254783	44-10	150745	P	P	EXCAVATION	Yellow Shielded
M2221	148443	44-10	150422	P	P	EXCAVATION	Green
M2221	147508	44-10	149451	P	P	SOIL SAMPLING	Red
~~M2350~~	~~186198~~	~~44-10~~	~~164157~~				~~Whit~~ PA
M19	144060	---	-------	P	P	DOT SURVEY	Dose Rate
M2929	137607	43-10-1	142936	P	N/A	Smears	Smear Counter A
M2929	147736	43-10-1	150788	P	N/A	Smears	Smear Counter B

***See daily operation check spreadsheet**

Work Performed: (Information is recorded on project data sheets and is not repeated in this log.)

Time	Activity
0700	OP CHECKS -START
	DOT OUTGOING SURVEY
	SOIL SAMPLING
	EXCAVATION
1700	OP CHECK - END

Radiation, or Health, & Safety Items

N/A

Problems/Issues

N/A

NFSS Project 2013 Radiation Protection Daily Log

Project URDD.IDWAIE09122153: Date 120413 **Prepared** [redacted]

Weather: OVERCAST, MILD

Personnel Onsite

Radiological Staff [redacted]
Other: Client representative, URS IE Buffalo, ROSSO
Visitors requiring URS escort:

Instruments

Meter	SN	probe	SN	op Check (p/f)* Start	End	Area Used	Color/Notes
M12	281910	44-9	308451	P	P	SOIL SAMPLE	White Frisker
M12	281980	44-9	308445	P	P	EXCAVATION	Red Frisker
M3	51526	44-9	042780	P	NOT	USED	Yellow Frisker
M12	102868	44-9	15129	P	P	SOIL SAMPLE	Yellow Scaler
M2241	149394	44-9	251672	P	NOT	USED	Blue Scaler
M2360	276943	43-93	197430	P	NOT	USED	Blue
M2360	220246	43-93	199826	P	P	SOIL SAMPLE	Green
M2221	138377	44-10	198936	P	P	EXCAVATION	Blue Shielded
M2221	254783	44-10	150745	P	P	EXCAVATION	Yellow Shielded
M2221	148443	44-10	150422	P	P	EXCAVATION	Green
M2221	147508	44-10	149451	P	P	SOIL SAMPLE	Red
~~M2350~~	~~186198~~	~~44-10~~	~~164157~~				~~Whit~~
M19	144060	---	-------	P	P	DOT SURVEY	Dose Rate
M2929	137607	43-10-1	142936	P	N/A	Smears	Smear Counter A
M2929	147736	43-10-1	150788	P	N/A	Smears	Smear Counter B

P12

***See daily operation check spreadsheet**

Work Performed: (Information is recorded on project data sheets and is not repeated in this log.)

Time	Activity
0700	OP CHECKS - START
	DOT SURVEY
	EXCAVATION
	SOIL SAMPLING
1700	OP CHECKS - END

Radiation, or Health, & Safety Items
RECEIVED NEW DOSIMETRY

Problems/Issues

NFSS Project 2013 Radiation Protection Daily Log

Project URDD.IDWAIE09122153: Date 120513 **Prepared** [redacted]

Weather: SUNNY, WARM,

Personnel Onsite

Radiological Staff [redacted]
Other: Client representative, URS IE Buffalo, RUSSO
Visitors requiring URS escort:

Instruments

Meter	SN	probe	SN	op Check (p/f)* Start	End	Area Used	Color/Notes
M12	281910	44-9	308451	P	P	SOIL SAMPLING	White Frisker
M12	281980	44-9	308445	P	P	SPOILS PILE	Red Frisker
M3	51526	44-9	042780	P	N/U		Yellow Frisker
M12	102868	44-9	15129	P	P	SOIL SAMPLING	Yellow Scaler
M2241	149394	44-9	251672	P	N/U		Blue Scaler
M2360	276943	43-93	197430	P	N/U		Blue
M2360	220246	43-93	199826	P	P		Green
M2221	138377	44-10	198936	P	N/U		Blue Shielded
M2221	254783	44-10	150745	P	N/U		Yellow Shielded
M2221	148443	44-10	150422	P	P	SPOILS PILE	Green
M2221	147508	44-10	149451	P	P	SOIL SAMPLING	Red
~~M2350~~	~~186198~~	~~44-10~~	~~164157~~				~~Whit~~ 174
M19	144060	---	-------	P	P	DOT SURVEY	Dose Rate
M2929	137607	43-10-1	142936	P	N/A	Smears	Smear Counter A
M2929	147736	43-10-1	150788	P	N/A	Smears	Smear Counter B

***See daily operation check spreadsheet**

Work Performed: (Information is recorded on project data sheets and is not repeated in this log.)

Time	Activity
0700	OP CHECK-START
	SOIL SAMPLING
	DOT SURVEY
	SPOILS SURVEY
	INCOMING SURVEY
1700	OP CHECK-END

Radiation, or Health, & Safety Items

Problems/Issues

NFSS Project 2013 Radiation Protection Daily Log

Project URDD.IDWAIE09122153: Date 120613 **Prepared** [redacted]

Weather: COLD, OVERCAST

Personnel Onsite

Radiological Staff [redacted]
Other: Client representative, URS IE Buffalo, RUSSO
Visitors requiring URS escort:

Instruments

Meter	SN	probe	SN	op Check (p/f)* Start	End	Area Used	Color/Notes
M12	281910	44-9	308451	P	P	SOIL SAMPLING	White Frisker
M12	281980	44-9	308445	P	P	DOT SURVEY/DECON	Red Frisker
~~M3~~	~~51526~~	~~44-9~~	~~042780~~				~~Yellow Frisker~~
M12	102868	44-9	15129	P	P	SOIL SAMPLING	Yellow Scaler
M2241	149394	44-9	251672	P	N/U		Blue Scaler
M2360	276943	43-93	197430	P	N/U		Blue
M2360	220246	43-93	199826	P	P	SOIL SAMPLING	Green
~~M2221~~	~~138377~~	~~44-10~~	~~198936~~				~~Blue Shielded~~
~~M2221~~	~~254783~~	~~44-10~~	~~150745~~				~~Yellow Shielded~~
M2221	148443	44-10	150422	P	N/U		Green
M2221	147508	44-10	149451	P	P	SOIL SAMPLING	Red
~~M2350~~	~~186198~~	~~44-10~~	~~164157~~				~~Whit~~
M19	144060	---	-------	P	P	DOT SURVEY	Dose Rate
M2929	137607	43-10-1	142936	P	N/A	Smears	Smear Counter A
M2929	147736	43-10-1	150788	P	N/A	Smears	Smear Counter B

***See daily operation check spreadsheet**

Work Performed: (Information is recorded on project data sheets and is not repeated in this log.)

Time	Activity
0700	OP CHECKS - START
	DOT SURVEY
	SOIL SAMPLING
	OUTGOING SURVEY - TRAILER, PUMP, HOSES
1700	OP CHECKS - END

Radiation, or Health, & Safety Items
ASSIGNED RUS 4 TO MATT KALTENBACH. ASSIGNED HIM DECEMBER BADGE. BIOASSAY KITS (EXIT) RECEIVED.

Problems/Issues

NFSS Project 2013 Radiation Protection Daily Log

Project URDD.IDWAIE09122153: Date 121313 **Prepared B**[redacted]

Weather: COLD, OVERCAST

Personnel Onsite

Radiological Staff[redacted]
Other: Client representative, URS IE Buffalo, ROSSO
Visitors requiring URS escort:

Instruments

Meter	SN	probe	SN	op Check (p/f)* Start	End	Area Used	Color/Notes
M12	281910	44-9	308451	P	P	SOIL SAMPLING	White Frisker
M12	281980	44-9	308445	P	P	DOT/Sizzor/Release	Red Frisker
~~M3~~	~~51526~~	~~44-9~~	~~042780~~				~~Yellow Frisker~~
M12	102868	44-9	15129	P	P	SOIL SAMPLING	Yellow Scaler
M2241	149394	44-9	251672	P	N/U		Blue Scaler
M2360	276943	43-93	197430	P	P	Sizzor / Release	Blue
M2360	220246	43-93	199826	P	P	SOIL SAMPLING	Green
~~M2221~~	~~138377~~	~~44-10~~	~~198936~~				~~Blue Shielded~~
~~M2221~~	~~254783~~	~~44-10~~	~~150745~~				~~Yellow Shielded~~
M2221	148443	44-10	150422	P	P	SOIL SAMPLING	Green
M2221	147508	44-10	149451	P	N/U		Red
~~M2350~~	~~186198~~	~~44-10~~	~~164157~~				~~Whit~~
M19	144060	---	-------	P	P	DOT/Sizzor lift	Dose Rate
M2929	137607	43-10-1	142936	P	N/A	Smears	Smear Counter A
~~M2929~~	~~147736~~	~~43-10-1~~	~~150788~~		~~N/A~~	Smears	~~Smear Counter B~~

***See daily operation check spreadsheet**

Work Performed: (Information is recorded on project data sheets and is not repeated in this log.)

Time	Activity
0700	OP CHECKS · START
	SOIL SAMPLING
	DOT SURVEY
	Sizzor lift investigation
1700	Release of Coveralls / Boots

Radiation, or Health, & Safety Items

Problems/Issues

NFSS Project 2013 Radiation Protection Daily Log

Project URDD.IDWAIE09122153: Date 120913 **Prepare** [redacted]

Weather: COLD, OVERCAST, RAIN

Personnel Onsite

Radiological Staff: [redacted]
Other: Client representative, URS IE Buffalo,
Visitors requiring URS escort:

Instruments

Meter	SN	probe	SN	op Check (p/f)* Start	End	Area Used	Color/Notes
M12	281910	44-9	308451	P	P	SOIL SAMPLING	White Frisker
M12	281980	44-9	308445	P	P	DOT	Red Frisker
~~M3~~	~~51526~~	~~44-9~~	~~042780~~				~~Yellow Frisker~~
M12	102868	44-9	15129	P	P	SOIL SAMPLING	Yellow Scaler
M2241	149394	44-9	251672	P	NOT USED		Blue Scaler
M2360	276943	43-93	197430	P	NOT USED		Blue
M2360	220246	43-93	199826	P	P	SOIL SAMPLING	Green
~~M2221~~	~~138377~~	~~44-10~~	~~198936~~				~~Blue Shielded~~
~~M2221~~	~~254783~~	~~44-10~~	~~150745~~				~~Yellow Shielded~~
M2221	148443	44-10	150422	P	P	SOIL SAMPLING	Green
M2221	147508	44-10	149451	P	P	GPS GWS	Red
M2350	186198	44-10	164157	P	NOT	USED	Whit
M19	144060	---	-------	P	P	DOT SURVEY	Dose Rate
M2929	137607	43-10-1	142936	P	N/A	Smears	Smear Counter A
M2929	147736	43-10-1	150788	P	N/A	Smears	Smear Counter B

***See daily operation check spreadsheet**

Work Performed: (Information is recorded on project data sheets and is not repeated in this log.)

Time	Activity
0700	OP CHECKS- START
	DOT SURVEY
	DECON EXCAVATOR
	GPS WALK OVER
	SOIL SAMPLING
	OUT GOING SURVEY
1700	OP CHECKS- END

Radiation, or Health, & Safety Items
SHIELDED M2221 AND M3 SHIPPED BACK

Problems/Issues

NFSS Project 2013 Radiation Protection Daily Log

Project URDD.IDWAIE09122153: Date 121013 **Prepared B** [redacted]

Weather: COLD, SNOW, OVERCAST

Personnel Onsite [redacted]

Radiological Staff
Other: Client representative, URS IE Buffalo, [redacted]
Visitors requiring URS escort:

Instruments

Meter	SN	probe	SN	op Check (p/f)* Start	End	Area Used	Color/Notes
M12	281910	44-9	308451	P	P	SOIL SAMPLING	White Frisker
M12	281980	44-9	308445	P	P	DOT SURVEY/OUT	Red Frisker
~~M3~~	~~51526~~	~~44-9~~	~~042780~~				~~Yellow Frisker~~
M12	102868	44-9	15129	P	P	SOIL SAMPLING	Yellow Scaler
M2241	149394	44-9	251672	P	N/	U	Blue Scaler
M2360	276943	43-93	197430	P	P	OUTGOING	Blue
M2360	220246	43-93	199826	P	P	SOIL SAMPLE	Green
~~M2221~~	~~138377~~	~~44-10~~	~~198936~~				~~Blue Shielded~~
~~M2221~~	~~254783~~	~~44-10~~	~~150745~~				~~Yellow Shielded~~
M2221	148443	44-10	150422	P	P	SOIL SAMPLING	Green
M2221	147508	44-10	149451	P	P	GWS	Red
~~M2350~~	~~186198~~	~~44-10~~	~~164157~~				~~Whit~~
M19	144060	---	-------	P	P	DOT	Dose Rate
M2929	137607	43-10-1	142936	P	N/A	Smears	Smear Counter A
M2929	147736	43-10-1	150788	P	N/A	Smears	Smear Counter B

***See daily operation check spreadsheet**

Work Performed: (Information is recorded on project data sheets and is not repeated in this log.)

Time	Activity
0700	OP CHECKS - START
	SOIL SAMPLING
	DOT SURVEY
	OUTGOING EQUIPMENT
1700	OP CHECKS - END

Radiation, or Health, & Safety Items
MONTHLY BADGE CHANGE

Problems/Issues

NFSS Project 2013 Radiation Protection Daily Log

Project URDD.IDWAIE09122153: Date 121113 **Prepar**[redacted]

Weather: COLD, OVERCAST

Personnel Onsite

Radiological Staf[redacted]
Other: Client representative, URS IE Buffalo, [redacted]
Visitors requiring URS escort:

Instruments

Meter	SN	probe	SN	op Check (p/f)* Start	End	Area Used	Color/Notes
M12	281910	44-9	308451	P	P	SOIL SAMPLE	White Frisker
M12	281980	44-9	308445	P	P	DOT SURVEY	Red Frisker
~~M3~~	~~51526~~	~~44-9~~	~~042780~~				~~Yellow Frisker~~
M12	102868	44-9	15129	P	P	SOIL SAMPLE	Yellow Scaler
M2241	149394	44-9	251672	P	NOT USED		Blue Scaler
M2360	276943	43-93	197430	P	~~P~~ NOT USED		Blue
M2360	220246	43-93	199826	P	P	SOIL SAMPLE	Green
~~M2221~~	~~138377~~	~~44-10~~	~~198936~~				~~Blue Shielded~~
~~M2221~~	~~254783~~	~~44-10~~	~~150745~~				~~Yellow Shielded~~
M2221	148443	44-10	150422	P	P	SOIL SAMPLE	Green
M2221	147508	44-10	149451	P	P	GWS	Red
~~M2350~~	~~186198~~	~~44-10~~	~~164157~~				~~Whit~~
M19	144060	---	-------	P	P	DOT	Dose Rate
M2929	137607	43-10-1	142936	P	N/A	Smears	Smear Counter A
M2929	147736	43-10-1	150788	P	N/A	Smears	Smear Counter B

***See daily operation check spreadsheet**

Work Performed: (Information is recorded on project data sheets and is not repeated in this log.)

Time	Activity
0700	OP CHECKS-START
	DOT SURVEY
	OUTGOING SURVEY
	SOIL SAMPLING
1700	GWS

Radiation, or Health, & Safety Items

Problems/Issues

NFSS Project 2013 Radiation Protection Daily Log

Project URDD.IDWAIE09122153: Date 12/2/13 **Prepared** [redacted]

Weather: COLD, PARTLY CLOUDY

Personnel Onsite

Radiological Sta[redacted]

Other: Client representative, URS IE Buffalo, 120359

Visitors requiring URS escort:

Instruments

Meter	SN	probe	SN	op Check (p/f)* Start	End	Area Used	Color/Notes
M12	281910	44-9	308451	P	P	SOIL SAMPLE	White Frisker
M12	281980	44-9	308445	P	~~P~~ NOT USED		~~Red Frisker~~
~~M3~~	~~51526~~	~~44-9~~	~~042780~~				~~Yellow Frisker~~
M12	102868	44-9	15129	P	P	SOIL SAMPLE	Yellow Scaler
M2241	149394	44-9	251672	P	N/U		Blue Scaler
M2360	276943	43-93	197430	P	N/U		Blue
M2360	220246	43-93	199826	P	P	SOIL SAMPLE	Green
~~M2221~~	~~138377~~	~~44-10~~	~~198936~~				~~Blue Shielded~~
~~M2221~~	~~254783~~	~~44-10~~	~~150745~~				~~Yellow Shielded~~
M2221	148443	44-10	150422	P	P	SOIL SAMPLE	Green
M2221	147508	44-10	149451	P	P	GWS	Red
~~M2350~~	~~186198~~	~~44-10~~	~~164157~~				~~Whit~~
M19	144060	---	-------	P	P	DOT	Dose Rate
M2929	137607	43-10-1	142936	P	N/A	Smears	Smear Counter A
~~M2929~~	~~147736~~	~~43-10-1~~	~~150788~~		~~N/A~~	~~Smears~~	~~Smear Counter B~~

*See daily operation check spreadsheet

Work Performed: (Information is recorded on project data sheets and is not repeated in this log.)

Time	Activity
0700	OP CHECKS START
	DOT
	GWS
	SOIL SAMPLING
1500	OP CHECK END

Radiation, or Health, & Safety Items

COLD TEMPERATURE. CHECK BODY TEMPS ARE MULTI BREAKS

Problems/Issues

NFSS Project 2013 Radiation Protection Daily Log

Project URDD.IDWAIE09122153: Date 12/6/13 **Prepared By** [redacted]

Weather: COLD, SNOW

Personnel Onsite

Radiological St [redacted]

Other: Client representative, URS IE Buffalo, RUSSO

Visitors requiring URS escort:

Instruments

Meter	SN	probe	SN	op Check (p/f)* Start	op Check (p/f)* End	Area Used	Color/Notes
M12	281910	44-9	308451	P	P	SOIL SAMPLE	White Frisker
M12	281980	44-9	308445	P	N/U		Red Frisker
~~M3~~	~~51526~~	~~44-9~~	~~042780~~				~~Yellow Frisker~~
M12	102868	44-9	15129	P	P	SOIL SAMPLE	Yellow Scaler
M2241	149394	44-9	251672	P	N/U		Blue Scaler
M2360	276943	43-93	197430	P	N/U		Blue
M2360	220246	43-93	199826	P	P	SOIL SAMPLE	Green
M2221	148443	44-10	150422	P	P	SOIL SAMPLE	Green
M2221	147508	44-10	149451	P	N/U		Red
M19	144060	---	-------	P	P	SOIL SAMPLE	Dose Rate
M2929	137607	43-10-1	142936	P	N/A	Smears	Smear Counter A

***See daily operation check spreadsheet**

Work Performed: (Information is recorded on project data sheets and is not repeated in this log.)

Time	Activity
0700	OP CHECKS-START
	SOIL SAMPLE
	DOT SURVEY
1700	OP CHECK-END

Radiation, or Health, & Safety Items

Problems/Issues

NFSS Project 2013 Radiation Protection Daily Log

Project URDD.IDWAIE09122153: Date 12/7/13 **Prepared** [redacted]

Weather: COLD, LIGHT SNOW

Personnel Onsite

Radiological [redacted]

Other: Client representative, URS IE Buffalo, RUSSO

Visitors requiring URS escort:

Instruments

Meter	SN	probe	SN	op Check (p/f)* Start	End	Area Used	Color/Notes
M12	281910	44-9	308451	P	P	SOIL SAMPLE	White Frisker
M12	281980	44-9	308445	P	N / U		Red Frisker
~~M3~~	~~51526~~	~~44-9~~	~~042780~~				~~Yellow Frisker~~
M12	102868	44-9	15129	P	P	DOT / SOIL SAMPLE	Yellow Scaler
M2241	149394	44-9	251672	P	N / U		Blue Scaler
M2360	276943	43-93	197430	P	N / U		Blue
M2360	220246	43-93	199826	P	P	SOIL SAMPLE	Green
M2221	148443	44-10	150422	P	P	SOIL SAMPLE	Green
M2221	147508	44-10	149451	P	N / U		Red
M19	144060	---	-------	P	P	DOT SURVEY	Dose Rate
M2929	137607	43-10-1	142936	P	N/A	Smears	Smear Counter A

***See daily operation check spreadsheet**

Work Performed: (Information is recorded on project data sheets and is not repeated in this log.)

Time	Activity
0700	OP CHECKS START
	DOT SURVEY
	SOIL SAMPLE
1700	OP CHECKS - END

Radiation, or Health, & Safety Items

Problems/Issues

NFSS Project 2013 Radiation Protection Daily Log

Project URDD.IDWAIE09122153: Date 121813 **Prepared** [redacted]

Weather: COLD, SNOW, OVERCAST

Personnel Onsite

Radiological [redacted]
Other: Client [redacted]
Visitors requiring URS escort:

Instruments

Meter	SN	probe	SN	op Check (p/f)* Start	End	Area Used	Color/Notes
M12	281910	44-9	308451	P	P	SOIL SURVEY	White Frisker
M12	281980	44-9	308445	P	N/U		Red Frisker
~~M3~~	~~51526~~	~~44-9~~	~~042780~~				~~Yellow Frisker~~
M12	102868	44-9	15129	P	P	SOIL SURVEY	Yellow Scaler
M2241	149394	44-9	251672	P	N/U		Blue Scaler
M2360	276943	43-93	197430	P	N/U		Blue
M2360	220246	43-93	199826	P	P	SOIL SURVEY	Green
M2221	148443	44-10	150422	P	P	SOIL SURVEY	Green
M2221	147508	44-10	149451	P	N/U		Red
M19	144060	---	-------	P	P	DOT	Dose Rate
M2929	137607	43-10-1	142936	P	N/A	Smears	Smear Counter A

***See daily operation check spreadsheet**

Work Performed: (Information is recorded on project data sheets and is not repeated in this log.)

Time	Activity
0700	OP CHECK - START
	SAMPLE (SOIL BORING)
	DOT SURVEY
1700	OP CHECK - END

Radiation, or Health, & Safety Items
BIOASSAY KITS HANDED TO [redacted] AND [redacted]

Problems/Issues

NFSS Project 2013 Radiation Protection Daily Log

Project URDD.IDWAIE09122153: Date 121913 **Prepared** [redacted]

Weather: MILD, SUNNY

Personnel On [redacted]

Radiological [redacted]
Other: Client representative, URS IE Buffalo, RUSSO
Visitors requiring URS escort:

Instruments

Meter	SN	probe	SN	op Check (p/f)* Start	End	Area Used	Color/Notes
M12	281910	44-9	308451	P	P	DOT SURVEY / RELEASE	White Frisker
M12	281980	44-9	308445	P	N/U		Red Frisker
~~M3~~	~~51526~~	~~44-9~~	~~042780~~				~~Yellow Frisker~~
M12	102868	44-9	15129	P	P	DOT SURVEY	Yellow Scaler
M2241	149394	44-9	251672	P	N/U		Blue Scaler
M2360	276943	43-93	197430	P	N/U		Blue
M2360	220246	43-93	199826	P	N/U		Green
M2221	148443	44-10	150422	P	N/U		Green
M2221	147508	44-10	149451	P	N/U		Red
M19	144060	---	--------	P	P	DOT / WASTE SURVEY	Dose Rate
M2929	137607	43-10-1	142936	P	N/A	Smears	Smear Counter A

***See daily operation check spreadsheet**

Work Performed: (Information is recorded on project data sheets and is not repeated in this log.)

Time	Activity
0700	OP CHECKS - START
	INCOMING COOLER SURVEY
	DOT SURVEY
	BAKER TANK WATER SAMPLING
	DEMOBILIZATION OF EQUIPMENT
1100	WASTE ACCUMULATION SURVEY

Radiation, or Health, & Safety Items

Problems/Issues

NFSS Project 2014 Radiation Protection Daily Log

Project URDD.IDWAIE09122153: Date 6/25/2014 Prepared By [redacted]

Weather: Humid and Warm

Personnel Onsite

Radiological Staff: [redacted]
Other: Client representative, URS IE Buffalo,
Visitors requiring URS escort: None

Instruments

Meter	SN	probe	SN	op Check (p/f)* Start	End	Area Used	Color/Notes
M3	51526	44-9	042780	P	P	Soil	YellowFrisker
M2221	144863	44-9	37047	P	P	Soil	Blue Scaler
M2360	184903	43-93	179868	P	P	Soil	
M2221	138368	44-10	154615	P	p	Soil	
M2221	147508	44-10	149451	P	P	Gamma Survey	Red
M3	81045	44-2	089189	P	P	Cooler survey	White
M2929		43-10-1		P	N/A	Smears	Smear Counter

***See daily operation check spreadsheet**

Work Performed: (Information is recorded on project data sheets and is not repeated in this log.)

Time	Activity
0700	Instrument checks/ Cooler release
800	Soil sampling, Gamma survey of excavation piles
1130	Lunch
1200	GWS and Soil sampling
1630	Instrument checks

Radiation, or Health, & Safety Items
Mosquitoes are bad in wooded areas.

Problems/Issues

NFSS Project 2014 Radiation Protection Daily Log

Project URDD.IDWAIE09122153: Date 6/24/2014 Prepared By [redacted]

Weather: Humid and Warm

Personnel Onsite

Radiological Staff: [redacted]
Other: Client representative, URS IE Buffalo,
Visitors requiring URS escort: None

Instruments

Meter	SN	probe	SN	op Check (p/f)* Start	End	Area Used	Color/Notes
M3	51526	44-9	042780	P	P	Soil	YellowFrisker
M2221	144863	44-9	37047	P	P	Soil	Blue Scaler
M2360	215282	43-93	339058	P	P	Soil	
M2221	138368	44-10	154615	P	P	Soil	
M2221	147508	44-10	149451	P	P		Red
M3	81045	44-2	089189	P	P	Cooler survey	White
M2929		43-10-1		P	N/A	Smears	Smear Counter

***See daily operation check spreadsheet**

Work Performed: (Information is recorded on project data sheets and is not repeated in this log.)

Time	Activity
0700	Instrument checks/ Cooler release
800	Soil sampling
1130	Lunch
1200	Soil sampling
1630	Instrument checks

Radiation, or Health, & Safety Items
Mosquitoes are bad in wooded areas. Watch footing in GWS areas, and poison ivy, sumac, etc .

Problems/Issues
The replacement 2360 was received a control chart was generated.

NFSS Project 2014 Radiation Protection Daily Log

Project URDD.IDWAIE09122153: Date 6/23/2014 Prepared By [redacted]

Weather: Humid and Warm

Personnel Onsite

Radiological Staff: [redacted]
Other: Client representative, URS IE Buffalo,
Visitors requiring URS escort: None

Instruments

Meter	SN	probe	SN	op Check (p/f)* Start	End	Area Used	Color/Notes
M3	51526	44-9	042780	P	P	Soil	YellowFrisker
M2221	144863	44-9	37047	P	P	Soil	Blue Scaler
M2360	184903	43-93	179868	NA	NA		
M2221	138368	44-10	154615	P	P	Soil	
M2221	147508	44-10	149451	P	P	GWS	Red
M3	81045	44-2	089189	P	P	Cooler survey	White
M2929		43-10-1		P	N/A	Smears	Smear Counter

***See daily operation check spreadsheet**

Work Performed: (Information is recorded on project data sheets and is not repeated in this log.)

Time	Activity
0700	Instrument checks/ Cooler release
800	GWS and Soil sampling
1130	Lunch
1200	GWS and Soil sampling
1630	Instrument checks

Radiation, or Health, & Safety Items
Mosquitoes are bad in wooded areas. Watch footing in GWS areas, and poison ivy, sumac, etc .

Problems/Issues
The 2360 was repaired on 6/20 but after generating the data for a control chart the instrument did not respond correctly in the sun. Multiple attempts were made to repair the instrument but a replacement was ordered.

NFSS Project 2014 Radiation Protection Daily Log

Project URDD.IDWAIE09122153: Date 6/20/2014 Prepared By [redacted]

Weather: Dry

Personnel Onsite

Radiological Staff: [redacted]
Other: Client representative, URS IE Buffalo,
Visitors requiring URS escort:

Instruments

Meter	SN	probe	SN	op Check (p/f)* Start	End	Area Used	Color/Notes
M3	51526	44-9	042780	P	P	Soil	YellowFrisker
M2221	144863	44-9	37047	P	P	Soil	Blue Scaler
M2360	184903	43-93	179868	P	Fail	Soil	Punctured
M2221	138368	44-10	154615	P	p	Soil	
M2221	147508	44-10	149451	P	P	GWS	Red
M3	81045	44-2	089189	P	P	Cooler survey	White
M2929		43-10-1		P	N/A	Smears	Smear Counter

***See daily operation check spreadsheet**

Work Performed: (Information is recorded on project data sheets and is not repeated in this log.)

Time	Activity
0700	Instrument checks/ Cooler release
800	GWS and Soil sampling
1130	Lunch
1200	GWS and Soil sampling
1630	Instrument checks

Radiation, or Health, & Safety Items
Mosquitoes are bad in wooded areas. Watch footing in GWS areas, and poison ivy, sumac, etc .

Problems/Issues
On the last soil sample the mylar of the 2360 was punctured. A replacement mylar was installed and the instrument left to dark correct. .

NFSS Project 2014 Radiation Protection Daily Log

Project URDD.IDWAIE09122153: Date 6/19/2014 Prepared By [redacted]

Weather: Humid and Cloudy

Personnel Onsite

Radiological Staff: [redacted]
Other: Client representative, URS IE Buffalo,
Visitors requiring URS escort:

Instruments

Meter	SN	probe	SN	op Check (p/f)* Start	End	Area Used	Color/Notes
M3	51526	44-9	042780	P	P	Soil	YellowFrisker
M2221	144863	44-9	37047	P	P	Soil	Blue Scaler
M2360	184903	43-93	179868	P	P	Soil	
M2221	138368	44-10	154615	P	P	Soil	
M2221	147508	44-10	149451	P	P	GWS & Soil	Red
M3	81045	44-2	089189	P	P	Cooler survey	White
M2929		43-10-1		P	N/A	Smears	Smear Counter

***See daily operation check spreadsheet**

Work Performed: (Information is recorded on project data sheets and is not repeated in this log.)

Time	Activity
0700	Instrument checks/ Cooler release
800	GWS and Soil sampling
1130	Lunch
1200	GWS and Soil sampling
1630	Instrument checks

Radiation, or Health, & Safety Items
Mosquitoes are bad in wooded areas. Watch footing in GWS areas, and poison ivy, sumac, etc .

Problems/Issues
Received the replacement 2221 w/44-10. Did initial checks to set up control chart. .

NFSS Project 2014 Radiation Protection Daily Log

Project URDD.IDWAIE09122153: Date 6/18/2014 Prepared By [redacted]

Weather: Humid and Cloudy

Personnel Onsite

Radiological Staff: [redacted]
Other: Client representative, URS IE Buffalo,
Visitors requiring URS escort:

Instruments

Meter	SN	probe	SN	op Check (p/f)* Start	End	Area Used	Color/Notes
M3	51526	44-9	042780	P	P	Soil	YellowFrisker
M2221	144863	44-9	37047	P	P	Soil	Blue Scaler
M2360		43-93		P	P	Soil	
M2221	148443	44-10	150422	P	p	Soil/Failed	Green
M2221	147508	44-10	149451	P	P	GWS & Soil	Red
M3	81045	44-2	089189	P	P	Cooler survey	White
M2929		43-10-1		P	N/A	Smears	Smear Counter

***See daily operation check spreadsheet**

Work Performed: (Information is recorded on project data sheets and is not repeated in this log.)

Time	Activity
0700	Instrument checks/ Cooler release
800	GWS and Soil sampling
1130	Lunch
1200	GWS and Soil sampling
1630	Instrument checks

Radiation, or Health, & Safety Items
Mosquitoes are bad in wooded areas. Watch footing in GWS areas, and poison ivy, sumac, etc .

Problems/Issues
The 2221 used for soil sampling failed. Checked the batteries, battery connections, and cable.. Problem is in the box and not the probe. A replacement instrument was ordered from ERG. Instrument will be sent for repair.

NFSS Project 2014 Radiation Protection Daily Log

Project URDD.IDWAIE09122153: Date 6/17/2014 Prepared By [redacted]

Weather: Humid and Cloudy

Personnel Onsite

Radiological Staff: [redacted]
Other: Client representative, URS IE Buffalo,
Visitors requiring URS escort:

Instruments

Meter	SN	probe	SN	op Check (p/f)* Start	End	Area Used	Color/Notes
M3	51526	44-9	042780	P	P	Soil	YellowFrisker
M2221	144863	44-9	37047	P	P	Soil	Blue Scaler
M2360	184903	43-93	179868	P	P	Soil	
M2221	148443	44-10	150422	P	P	Soil	Green
M2221	147508	44-10	149451	P	P	GWS	Red
M3	81045	44-2	089189	P	P		White
M2929		43-10-1		P	N/A	Smears	Smear Counter

***See daily operation check spreadsheet**

Work Performed: (Information is recorded on project data sheets and is not repeated in this log.)

Time	Activity
0700	Instrument Checks
800	GWS
1130	Lunch
1200	GWS started Soil sampling
1630	Instrument checks

Radiation, or Health, & Safety Items
Mosquitoes are bad in wooded areas. Areas are being cleared

Problems/Issues
Received replacement GPS. Was able to get system set up but had to start files with a line feature to get data to store. .

NFSS Project 2014 Radiation Protection Daily Log

Project URDD.IDWAIE09122153: Date 6/16/2014 Prepared By [redacted]

Weather: Cloudy light showers

Personnel Onsite

Radiological Staff: [redacted]
Other: Client representative, URS IE Buffalo,
Visitors requiring URS escort:

Instruments

Meter	SN	probe	SN	op Check (p/f)* Start	End	Area Used	Color/Notes
M3	51526	44-9	042780	P	P	Soil	YellowFrisker
M2221	144863	44-9	37047	P	P	Soil	Blue Scaler
M2360	184903	43-93	179868	P	P	Soil	
M2221	148443	44-10	150422	P	p	Soil	Green
M2221	147508	44-10	149451	P	P	GWS & Soil	Red
M3	81045	44-2	089189	P	P		White
M2929		43-10-1		P	N/A	Smears	Smear Counter

***See daily operation check spreadsheet**

Work Performed: (Information is recorded on project data sheets and is not repeated in this log.)

Time	Activity
0800	Set up equipment
	Visited sites to identify areas which need clearing
1700	Left Site

Radiation, or Health, & Safety Items
Watch out for insects, and poison ivy, sumac, and oak. Also watch out for Modern trucks as you enter the site.

Problems/Issues
The rental GPS needed a software upgrade. Tried to trouble shoot it for most of the day. The vendor decided to ship a replacement.

NFSS Project 2014 Radiation Protection Daily Log

Project URDD.IDWAIE09122153: Date 6/26/14 **Prepared By** [redacted]

Weather: humid / cloudy

Personnel Onsite

Radiological Staff: [redacted]
Other: Client representative, URS IE Buffalo,
Visitors requiring URS escort:

Instruments

Meter	SN	probe	SN	op Check (p/f)* Start	End	Area Used	Color/Notes
M3	51526	44-9	042780	P	P	Soil	YellowFrisker
M2221	144863	44-9	37047	P	P	Soil	Blue Scaler
M2360	215282	43-93	339058	P	P	Soil	
M2221	138368	44-10	154615	P	P	Soil	Green
M2221	147508	44-10	149451	P	P		
M3	81045	44-2	089189	P	P	Cooler survey	White
M2929	121870	43-10-1	126405	P	N/A	Smears	Smear Counter

***See daily operation check spreadsheet**

Work Performed: (Information is recorded on project data sheets and is not repeated in this log.)

Time	Activity
0700	Instrument Checks/cooler release
0800	GWS and soil sampling
1130	Lunch
1200	GWS and soil sampling
1630	Instruments Checks

Radiation, or Health, & Safety Items ~~Excavator brought~~

Problems/Issues Excavator brought on site with excess dirt and debris, Excavator removed for further decon.

NFSS Project 2014 Radiation Protection Daily Log

Project URDD.IDWAIE09122153: Date 6/27/14 **Prepared By** [redacted]

Weather: Sunny / warm

Personnel Onsite

Radiological Staff: [redacted]

Other: Client representative, URS IE Buffalo,

Visitors requiring URS escort:

Instruments

Meter	SN	probe	SN	op Check (p/f)* Start	End	Area Used	Color/Notes
M3	51526	44-9	042780			Soil	YellowFrisker
M2221	144863	44-9	37047			Soil	Blue Scaler
M2360	215282	43-93	339058			Soil	
M2221	138368	44-10	154615			Soil	Green
M2221	147508	44-10	149451				
M3	81045	44-2	089189			Cooler survey	White
M2929	121870	43-10-1	126405		N/A	Smears	Smear Counter

*See daily operation check spreadsheet

Work Performed: (Information is recorded on project data sheets and is not repeated in this log.)

Time	Activity
0700	Instrument checks / cooler release
0800	Baker tank / soil sampling
1130	Lunch
1200	Soil sampling
1630	Instrument checks

Radiation, or Health, & Safety Items

Problems/Issues Excavator re-surveyed

NFSS Project 2014 Radiation Protection Daily Log

Project URDD.IDWAIE09122153: Date 6/30/14 **Prepared By** [redacted]

Weather: Sunny, hot

Personnel Onsite

Radiological Staff: [redacted]
Other: Client representative, URS IE Buffalo,
Visitors requiring URS escort:

Instruments

Meter	SN	probe	SN	op Check (p/f)* Start	End	Area Used	Color/Notes
M3	51526	44-9	042780	P	P	Soil	YellowFrisker
M2221	144863	44-9	37047	P	P	Soil	Blue Scaler
M2360	215282	43-93	339058	P	P	Soil	
M2221	138368	44-10	154615	P	P	Soil	Green
M2221	147508	44-10	149451	P	P		
M3	81045	44-2	089189	P	P	Cooler survey	White
M2929	121870	43-10-1	126405	P	N/A	Smears	Smear Counter

***See daily operation check spreadsheet**

Work Performed: (Information is recorded on project data sheets and is not repeated in this log.)

Time	Activity
0700	Instrument checks / cooler release
800	Soil sampling
1130	Lunch
1200	Soil sampling
1630	Instrument checks

Radiation, or Health, & Safety Items Baker tank entry to continue to remove sediments

Problems/Issues

NFSS Project 2014 Radiation Protection Daily Log

Project URDD.IDWAIE09122153: Date 7-1-14 **Prepared By** [redacted]

Weather: hot, sunny

Personnel Onsite

Radiological Staff: [redacted]
Other: Client representative, URS IE Buffalo,
Visitors requiring URS escort:

Instruments

Meter	SN	probe	SN	op Check (p/f)* Start	End	Area Used	Color/Notes
M3	51526	44-9	042780			Soil	YellowFrisker
M2221	144863	44-9	37047			Soil	Blue Scaler
M2360	215282	43-93	339058			Soil	
M2221	138368	44-10	154615			Soil	Green
M2221	147508	44-10	149451				
M3	81045	44-2	089189			Cooler survey	White
M2929	121870	43-10-1	126405		N/A	Smears	Smear Counter

***See daily operation check spreadsheet**

Work Performed: (Information is recorded on project data sheets and is not repeated in this log.)

Time	Activity
0700	Instrument checks / cooler release
800	Soil sampling
1130	Lunch
1200	Soil sample
1630	instrument checks

Radiation, or Health, & Safety Items

Problems/Issues

NFSS Project 2014 Radiation Protection Daily Log

Project URDD.IDWAIE09122153: **Date** 7-2-14 **Prepared By** [redacted]

Weather: sunny / hot

Personnel Onsite

Radiological Staff: [redacted]

Other: Client representative, URS IE Buffalo,

Visitors requiring URS escort:

Instruments

Meter	SN	probe	SN	op Check (p/f)* Start	End	Area Used	Color/Notes
M3	51526	44-9	042780	P		Soil	YellowFrisker
M2221	144863	44-9	37047	P		Soil	Blue Scaler
M2360	215282	43-93	339058	P		Soil	
M2221	138368	44-10	154615	P		Soil	Green
M2221	147508	44-10	149451	P			
M3	81045	44-2	089189	P		Cooler survey	White
M2929	121870	43-10-1	126405	P	N/A	Smears	Smear Counter

*See daily operation check spreadsheet

Work Performed: (Information is recorded on project data sheets and is not repeated in this log.)

Time	Activity
0700	Instrument checks / cooler release
800	Soil sampling
1130	Lunch
1200	Survey items
1700	Instrument checks

Radiation, or Health, & Safety Items

survey of baker, tank, manhole pipe
roof-off

Problems/Issues

NFSS Project 2014 Radiation Protection Daily Log

Project URDD.IDWAIE09122153: Date 7-7-14 **Prepared By** [redacted]

Weather: Windy, overcast, warm

Personnel Onsite

Radiological Staff: [redacted]
Other: Client representative, URS IE Buffalo,
Visitors requiring URS escort:

Instruments

Meter	SN	probe	SN	op Check (p/f)* Start	End	Area Used	Color/Notes
M3	51526	44-9	042780	P		Soil	YellowFrisker
M2221	144863	44-9	37047	P		Soil	Blue Scaler
M2360	215282	43-93	339058	P		Soil	
M2221	138368	44-10	154615	P		Soil	Green
M2221	147508	44-10	149451	P			
M3	81045	44-2	089189	P		Cooler survey	White
M2929	121870	43-10-1	126405	P	N/A	Smears	Smear Counter

*See daily operation check spreadsheet

Work Performed: (Information is recorded on project data sheets and is not repeated in this log.)

Time	Activity
0730	Check in instruments.
800	data entry
1130	lunch

Radiation, or Health, & Safety Items

Problems/Issues

Appendix E-3-1

Radiation Work Permit Log

Radition Work Permit Log

Project Name NFSS 2013 2014 BOP Investigation

Permit (RWP or HWP)	Site	Yr	Number	RWP/HWP #	Issue Date	Type (Job or General)	Description	# of pages	Termination Date
RWP	NFSS	13	001	NFSS-13-001	11/5/2013	Job	Initial Boring	2	12/16/2013
RWP	NFSS	13	2	NFSS-13-2	11/7/2013	Job	Packaging Samples	1	11/11/2013
RWP	NFSS	13	3	NFSS-13-3	11/18/2013	Job	Sampling	3	1/6/2014
RWP	NFSS	13	4	NFSS-13-4	11/20/2013	Job	Excavation Manhole 6	2	12/6/2013
RWP	NFSS	13	5	NFSS-13-5	11/26/2013	Job	Sampling	1	1/6/2014
RWP	NFSS	13	6	NFSS-13-6	11/26/2013	Job	Excavation Manhole 6	2	12/16/2013
HWP	NFSS	14	7	NFSS-14-7	5/13/2014	Job	Sizzor lift battery and fluid removal	1	8/6/2014
RWP	NFSS	14	8	NFSS-14-8	6/16/2014	Job	Additional Sampling	1	7/31/2014
HWP	NFSS	14	9	NFSS-14-9	6/26/2014	Job	Decon of Baker Tank	10	8/6/2014

Appendix E-3-2

Radiation Work Permits

(4)

URS	Health, Safety and Environment **RADIATION WORK PERMIT**	Attachment 052-2 NA Issue Date: July 2000 Revision 2: December 2009

RWP Number: NFSS-13-001	Work Location: NFSS Site
RWP Job Description: Various locations on site Boring to depth of no more than 5 feet	Start Date/Time: 11/5/13 0800
	Expiration Date/Time: 11/15/13 1800
	Requested By: [redacted]
Type of RWP: ☐ General ☒ Job-Specific	Request Date: 11/5/13

Rad Training Requirements	ALARA Requirements	Survey Frequency	Pre-Job Radiation Levels
☐ Rad Worker I	☐ ALARA Review	☐ Constant HP Coverage	☒ General Area Dose Rate:
☐ Rad Worker II	☐ Pre-Job Briefing	☒ Periodic HP Coverage*	☐ Job Specific Dose Rate:
☐ Rad Safety Officer	☐ Air Sampling	* Define periodic coverage: HP Staff is available	☐ Contamination Level:
☐ Site Specific	☐ Other (specify)		☐ % DAC:
☒ Other (specify)			☐ Other (specify): dose rates are up to

Required Personnel Protective Clothing and Equipment

Anti-Cs		Monitoring
☐ Hood	☐ Rubber Gloves	☒ TLD
☐ Coveralls	☐ Cotton Glove Liners	☐ Extremity TLD
☐ Coveralls (2 pair)	☐ Tape Coveralls at Wrist and Ankles	☐ Pocket dosimeter
☐ Rubber Shoe Covers	☐ Other (specify):	☐ Hand-held monitor
☐ Cloth Boot Covers		☒ Hand/foot monitor/frisker
☒ Latex Gloves		☐ Whole body frisk
☐ Cotton Work Gloves		☒ Other (specify): [redacted]

N/A Respiratory Protection	N/A Special Precautions	Additional Precautions/Requirements
☐ Full-face (Negative Pressure)*	☐ "Buddy System" in Effect	Describe:
☐ Powered Air-Purifying*	☐ Special Training or Pre-Job Briefing Required	
☐ Supplied Air	☐ Special Personnel Frisking Considerations	
☐ Self-contained Breathing Apparatus	☐ Dose/Contamination Reduction Considerations	
☐ Other (specify):	☐ Stay Time Controls	
*Specify cartridge or canister type	☐ Other (specify)	

Radiological Work Zone Entry Log

Print Name	Signature	Employee #	TLD Initial	TLD Exit	Total Dose	Time Enter	Time Exit	Time Enter	Time Exit
[redacted]		N/A	11/5/13			1420	1645		
		54591	11/5/13			1420	1645		
		-	11/5/13			1420	1645		
		116841	11-5-13			1420	1645		
		48269	11/5/13			1420	1645		
		~~N/A~~	11/6/13			0800	1630		
		N/A	11/6			800	1630		
		-	11/6			800	1630		
		N/A	11/7/13			0800	1715		
		N/A	11/7			0800	1630		
		NA	11/7			0800	2745		

Ap[redacted]	Date	[redacted]	Date
Sit[redacted]	11/5/13		12/16/13
Sit[redacted]			
Sit[redacted]			

RWP/HWP Number NFSS.13.001 Page 2 of 2

Job Descriptions BORING TO DEPTH 5' OR LESS Issue Date 110613

Radiological /Harardous Work Zone Entry Log

	Print Name	Signature	Employee #	Date	Time (24 hr clock) Entry	Exit
	[redacted]		N/A	110813	0830	1200
			N/A	11/8/13	820	1200
			NA	11/8/13	830	1200
			N/A	11/11/13	0900	1630
			N/A	11/11/13	900	1630
			NA	11/11/13	900	1630
			N/A	11/12/13	0845	1630
			N/A	11/12/13	800	1630
			NA	11/12/13	845	1630
			54591	11/12/13	0845	1630
			~~N/A~~	111313	0800 ~~0845~~ PA	1630
			N/A	11/13/13	800	1630
			NA	11/13/13	800	1630
			N/A	11/14/13	0800	1630
				11/14/13	0800	1630
			NA	11/14/13	0800	1630
			N/A	11/15/13	1215	1545
			N/A	11/15/13	1215	1545
			—	11/15/13	1215	1545
20						
21						
22						
23						
24						
25						
26						
27						
28						
29						
30						

URS	Health, Safety and Environment **RADIATION WORK PERMIT**	Attachment 052-2 NA Issue Date: July 2000 Revision 2: December 2009

RWP Number: NFSS-13-002	Work Location: NFSS
RWP Job Description: Scanning + Packaging Samples	Start Date/Time: 11/07/13 1200
	Expiration Date/Time: 11/08/13 1700
	Requested By: [redacted]
Type of RWP: ☐ General ☒ Job-Specific	Request Date: 11/07/13

Rad Training Requirements	ALARA Requirements	Survey Frequency	Pre-Job Radiation Levels
☐ Rad Worker I	☐ ALARA Review	☐ Constant HP Coverage	☒ General Area Dose Rate:
☐ Rad Worker II	☐ Pre-Job Briefing	☒ Periodic HP Coverage*	☐ Job Specific Dose Rate:
☐ Rad Safety Officer	☐ Air Sampling	* Define periodic coverage:	☐ Contamination Level:
☒ Site Specific	☐ Other (specify)		☐ % DAC: Background
☐ Other (specify)			☐ Other (specify):

Required Personnel Protective Clothing and Equipment

Anti-Cs		Monitoring
☐ Hood	☐ Rubber Gloves	☒ TLD
☐ Coveralls	☐ Cotton Glove Liners	☐ Extremity TLD
☐ Coveralls (2 pair)	☐ Tape Coveralls at Wrist and Ankles	☐ Pocket dosimeter
☐ Rubber Shoe Covers	☐ Other (specify):	☐ Hand-held monitor
☐ Cloth Boot Covers		☒ Hand/foot monitor/frisker
☒ Latex Gloves		☐ Whole body frisk
☐ Cotton Work Gloves		☒ Other (specify):

Respiratory Protection	Special Precautions	Additional Precautions/Requirements
☐ Full-face (Negative Pressure)*	☐ "Buddy System" in Effect	Describe:
☐ Powered Air-Purifying*	☐ Special Training or Pre-Job Briefing Required	
☐ Supplied Air	☐ Special Personnel Frisking Considerations	
☐ Self-contained Breathing Apparatus	☐ Dose/Contamination Reduction Considerations	
☐ Other (specify):	☐ Stay Time Controls	
*Specify cartridge or canister type	☐ Other (specify)	

Radiological Work Zone Entry Log

Print Name	Signature	Employee #	TLD ~~Initial~~ DATE	~~TLD Exit~~	Total Dose	Time Enter	Time Exit	Time Enter	Time Exit
[redacted]		48267	11/7/13			1300	1800		

[redacted]			Date 11/11/13
Site SHO:		Reason: Completed	
Site Manag[redacted]		11/7/13	

URS	Health, Safety and Environment **RADIATION WORK PERMIT**	Attachment 052-2 NA Issue Date: July 2000 Revision 2: December 2009

RWP Number: NFSS-13-RWP-03	Work Location: NFSS multiple locations
RWP Job Description:	Start Date/Time: 11/18/13 0700
	Expiration Date/Time: 12/13/13 1800
	Requested [redacted]
Type of RWP: ☐ General ☒ Job-Specific	Request Date: 11/18/13

Rad Training Requirements	ALARA Requirements	Survey Frequency	Pre-Job Radiation Levels
☐ Rad Worker I	☐ ALARA Review	☐ Constant HP Coverage	☒ General Area Dose Rate:
☐ Rad Worker II	☐ Pre-Job Briefing	☒ Periodic HP Coverage*	☐ Job Specific Dose Rate:
☐ Rad Safety Officer	☐ Air Sampling	* Define periodic coverage:	☐ Contamination Level:
☒ Site Specific	☐ Other (specify)		☐ % DAC:
☐ Other (specify)			☒ Other (specify): up to 80uR/h

Required Personnel Protective Clothing and Equipment

Anti-Cs		Monitoring
☐ Hood	☐ Rubber Gloves	☒ TLD
☐ Coveralls	☐ Cotton Glove Liners	☐ Extremity TLD
☐ Coveralls (2 pair)	☐ Tape Coveralls at Wrist and Ankles	☐ Pocket dosimeter
☐ Rubber Shoe Covers	☐ Other (specify):	☐ Hand-held monitor
☐ Cloth Boot Covers	Gloves when handling Soils	☒ Hand/foot monitor/frisker
☒ Latex Gloves		☐ Whole body frisk
☐ Cotton Work Gloves		☒ Other (specify): Biodosay

Respiratory Protection	Special Precautions	Additional Precautions/Requirements
☐ Full-face (Negative Pressure)*	☐ "Buddy System" in Effect	Describe:
☐ Powered Air-Purifying*	☐ Special Training or Pre-Job Briefing Required	
☐ Supplied Air	☐ Special Personnel Frisking Considerations	
☐ Self-contained Breathing Apparatus	☐ Dose/Contamination Reduction Considerations	
☐ Other (specify):	☐ Stay Time Controls	
*Specify cartridge or canister type	☐ Other (specify)	

Radiological Work Zone Entry Log

[redacted]	Employee #	TLD Initial	~~Exit~~ DATE	~~Total Dose~~	Time Enter	Time Exit	Time Enter	Time Exit
	N/A	11	18	13	830	1600		
	MA	11	18	13	800	1600		
	—	11	18	13	800	1600		
		11	19	13	0830	1600		
		11	20	13	0900	1600		
		11	20	13	0900	1600		
		11	20	13	0900	1600		
		11	21	~~13~~ 21	0830	1600		
		11	21	13	0830	1600		
		11	21	13	0830	1600		

[redacted]	Date	Termination	Date
	11/18/13	Site [redacted]	1/6/2014
	11/18/13	Reason: expired	
	11/18/13		

RWP/HWP Number NFSS-13-RWP03 Page 2 of 3

Job Descriptions Issue Date 111813

Radiological /Harardous Work Zone Entry Log

Print Name	Signature	Employee #	Date	Time (24 hr clock) Entry	Exit
[redacted]	[redacted]	N/A	11/22/13	0945	1600
			11/22/13	0945	1600
			11/22/13	0945	1600
			112513	0915	1620
			112513	0915	1620
			112513	0915	1620
			112613	1000	1615
			112613	1000	1615
			112613	1000	1615
			112713	0900	1515
			112713	0900	1515
			112713	0900	1515
			120213	0900	1530
			120213	0900	1530
			120213	0900	1530
			120313	0830	1600
			120313	0830	1600
			120313	0830	1600
			120413	0830	1600
			120413	0830	1600
			120413	0830	1600
			120513	0900	1605
			120513	0900	1605
			120513	0900	1605
			120613	0915	1430
			120613	915	1430
			120613	0915	1430
			120913	1000	1600
			120913	1000	1600
			120913	1000	1600

URS	Health, Safety and Environment **RADIATION WORK PERMIT**	Attachment 052-2 NA Issue Date: July 2000 Revision 2: December 2009

RWP Number: NFSS-13-04	Work Location: NFSS Storage Site
RWP Job Description: Excavation of the Manhole	Start Date/Time: 11/20/2013 0700
	Expiration Date/Time: 11/27/2013 1700
	Requested [redacted]
Type of RWP: ☐ General ☒ Job-Specific	Request Date: 11/20/2013

Rad Training Requirements	ALARA Requirements	Survey Frequency	Pre-Job Radiation Levels
☐ Rad Worker I ☐ Rad Worker II ☐ Rad Safety Officer ☐ Site Specific ☒ Other (specify)	☐ ALARA Review ☐ Pre-Job Briefing ☐ Air Sampling ☐ Other (specify)	☐ Constant HP Coverage ☒ Periodic HP Coverage* * Define periodic coverage: HP and instruments available.	☒ General Area Dose Rate: ☐ Job Specific Dose Rate: ☐ Contamination Level: ☐ % DAC: ☐ Other (specify):

Required Personnel Protective Clothing and Equipment

Anti-Cs		Monitoring
☐ Hood ☒ Coveralls ☐ Coveralls (2 pair) ☒ Rubber Shoe Covers ☐ Cloth Boot Covers ☒ Latex Gloves ☐ Cotton Work Gloves	☐ Rubber Gloves ☐ Cotton Glove Liners ☐ Tape Coveralls at Wrist and Ankles ☐ Other (specify): Coveralls when working with Potential for Mud or Bricks	☒ TLD ☐ Extremity TLD ☐ Pocket dosimeter ☐ Hand-held monitor ☒ Hand/foot monitor/frisker ☐ Whole body frisk ☒ Other (specify): Bioassay

Respiratory Protection	Special Precautions	Additional Precautions/Requirements
☐ Full-face (Negative Pressure)* ☐ Powered Air-Purifying* ☐ Supplied Air ☐ Self-contained Breathing Apparatus ☐ Other (specify): *Specify cartridge or canister type	☐ "Buddy System" in Effect ☐ Special Training or Pre-Job Briefing Required ☐ Special Personnel Frisking Considerations ☐ Dose/Contamination Reduction Considerations ☐ Stay Time Controls ☐ Other (specify)	Describe:

Radiological Work Zone Entry Log

Print Name	Signature	Employee #	TLD Initial	~~TLD Exit~~	~~Total Dose~~	Time Enter	Time Exit	Time Enter	Time Exit
[redacted]		N/A	11-20-13			N/A			
		~~N/A~~	~~11-21-13~~			8:00	4:30		
		N/A	11-21-13			9:50			
		N/A	11-21-13			9:50	4:30		
		74809	11/21/13			9:50			
		~~N/A~~	~~11/21~~						
		N/A	11/22			8:15	4:15		
		N/A	11/20			9:15	4:30		
		N/A	11/22/13			1400	1600		

	Date	Termi[redacted]	Date
[redacted]	11/20/13	Site R[redacted]	12/16/2013
	11-20/13	Reason: work Complete	
	11-20/13		

RWP/HWP Number NFSS-13-04 Page 2 of 2

Job Descriptions Excavation of MH06 Issue Date 11-20-2013

Radiological /Harardous Work Zone Entry Log

	[redacted]				Time (24 hr clock)	
			Employee #	Date	Entry	Exit
			NA	11-25-13	0800	1730
			N/A	11-25-13	0800	1730
			176809	11/25	0900	1730
			N/A	11-25	8:00	1730
			43432	11/25	8:00	1730
			NA	11/25	1000	1730
			N/A	11-26	8:00	4:30
			N/A	11-26	8:00	430
			N/A	11-26	0800	1630
			N/A	11-27	8:00	3:30
			NA	11-27	800	3:30
12						
13						
14						
15						
16						
17						
18						
19						
20						
21						
22						
23						
24						
25						
26						
27						
28						
29						
30						

URS	Health, Safety and Environment **RADIATION WORK PERMIT**	Attachment 052-2 NA Issue Date: July 2000 Revision 2: December 2009

RWP Number: NFSS-13-005	Work Location: NFSS Multiple locations
RWP Job Description: Collecting surface and subsurface soil samples	Start Date/Time: 11/30/2013 0700
	Expiration Date/Time: ~~12/12/13/2013~~ 1700
	Requested By: [redacted]
Type of RWP: ☐ General ☒ Job-Specific	Request Date: 11/26/2013

Rad Training Requirements	ALARA Requirements	Survey Frequency	Pre-Job Radiation Levels
☐ Rad Worker I ☐ Rad Worker II ☐ Rad Safety Officer ☒ Site Specific ☐ Other (specify)	☐ ALARA Review ☐ Pre-Job Briefing ☐ Air Sampling ☐ Other (specify)	☐ Constant HP Coverage ☒ Periodic HP Coverage* * Define periodic coverage: Friskers available and HP available to frisk and collect data	☒ General Area Dose Rate: ☐ Job Specific Dose Rate: ☐ Contamination Level: ☐ % DAC: ☐ Other (specify): Maximum dose rate seen onsite is 90uR/hr

Required Personnel Protective Clothing and Equipment

Anti-Cs		Monitoring
☐ Hood ☐ Coveralls ☐ Coveralls (2 pair) ☐ Rubber Shoe Covers ☐ Cloth Boot Covers ☒ Latex Gloves ☐ Cotton Work Gloves	☐ Rubber Gloves ☐ Cotton Glove Liners ☐ Tape Coveralls at Wrist and Ankles ☐ Other (specify): Gloves are required when handling loose soil, and deconing.	☒ TLD ☐ Extremity TLD ☐ Pocket dosimeter ☐ Hand-held monitor ☒ Hand/foot monitor/frisker ☐ Whole body frisk ☒ Other (specify): Bioassay

Respiratory Protection	Special Precautions	Additional Precautions/Requirements
☐ Full-face (Negative Pressure)* ☐ Powered Air-Purifying* ☐ Supplied Air ☐ Self-contained Breathing Apparatus ☐ Other (specify): *Specify cartridge or canister type	☐ "Buddy System" in Effect ☐ Special Training or Pre-Job Briefing Required ☐ Special Personnel Frisking Considerations ☐ Dose/Contamination Reduction Considerations ☐ Stay Time Controls ☐ Other (specify)	Describe:

Radiological Work Zone Entry Log DATE

Print Name	Signature	Employee #	TLD Initial	TLD Exit	Total Dose	Time Enter	Time Exit	Time Enter	Time Exit
[redacted]		N/A	~~12~~ 12	16	13	0930	1630		
		N/A	12	16	13	0930	1630		
		N/A	12	16	13	0930	1630		
		N/A	12	17	~~13~~ 13	0900	1630		
		N/A	12	17	13	0900	1630		
		N/A	12	17	13	0900	1630		
		N/A	12	18	13	0845	1600		
		N/A	12	18	13	0845	1600		
		N/A	12	18	13	0845	1600		

	Date		Date
[redacted]	11/26/13	[redacted]	11/6/2014
Site Manager:			

URS	Health, Safety and Environment **RADIATION WORK PERMIT**	Attachment 052-2 NA Issue Date: July 2000 Revision 2: December 2009

RWP Number:	NFSS-13-006	Work Location:	NFSS Manhole 6
RWP Job Description: Excavating trenches, removal of Manhole 6 and pumping water		Start Date/Time:	11/30/2013 0700
		Expiration Date/Time:	12/13/201301700
		Requested By:	[redacted]
Type of RWP: ☐ General ☒ Job-Specific		Request Date:	11/26/2013

Rad Training Requirements	ALARA Requirements	Survey Frequency	Pre-Job Radiation Levels
☐ Rad Worker I ☐ Rad Worker II ☐ Rad Safety Officer ☒ Site Specific ☐ Other (specify)	☐ ALARA Review ☐ Pre-Job Briefing ☐ Air Sampling ☐ Other (specify)	☐ Constant HP Coverage ☒ Periodic HP Coverage* * Define periodic coverage: Friskers available and HP available to frisk and collect data	☒ General Area Dose Rate: ☐ Job Specific Dose Rate: ☐ Contamination Level: ☐ % DAC: ☐ Other (specify): Exposure rates in area less than 50 uR/hr

Required Personnel Protective Clothing and Equipment

Anti-Cs		Monitoring
☐ Hood ☐ Coveralls ☐ Coveralls (2 pair) ☒ Rubber Shoe Covers ☐ Cloth Boot Covers ☒ Latex Gloves ☐ Cotton Work Gloves	☐ Rubber Gloves ☐ Cotton Glove Liners ☐ Tape Coveralls at Wrist and Ankles ☐ Other (specify): Gloves and rubber boot covers are required when handling loose soil, potentially contaminated water and deconing.	☒ TLD ☐ Extremity TLD ☐ Pocket dosimeter ☐ Hand-held monitor ☒ Hand/foot monitor/frisker ☐ Whole body frisk ☒ Other (specify): Bioassay

Respiratory Protection	Special Precautions	Additional Precautions/Requirements
☐ Full-face (Negative Pressure)* ☐ Powered Air-Purifying* ☐ Supplied Air ☐ Self-contained Breathing Apparatus ☐ Other (specify): *Specify cartridge or canister type	☐ "Buddy System" in Effect ☐ Special Training or Pre-Job Briefing Required ☐ Special Personnel Frisking Considerations ☐ Dose/Contamination Reduction Considerations ☐ Stay Time Controls ☐ Other (specify)	Describe: Water may contain elevated levels of U-238 and should be handled as contaminated.

Radiological Work Zone Entry Log

Print Name	Signature	Employee #	TLD ~~Initial~~ D/AVD	~~AVD~~ Exit	Total Dose	Time Enter	Time Exit	Time Enter	Time Exit
		See page 2.							

[redacted]

	te
	2/16/2013

RWP/HWP Number NFSS-13-006 Page 2 of 2

Job Descriptions MH06 EXCAVATION Issue Date 11-30-13

Radiological /Harardous Work Zone Entry Log

		Employee #	Date	Time (24 hr clock) Entry	Exit
	[redacted]	N/A	12/2/13	0800	1630
		176809	12/2/13	0800	
		NA	12/2/13	8:00	
		NA	12-2-13	8:00	
		N/A	12-3-13	0800	1630
		176809	12/3	0800	
		NA	12/3	0800	
		N/A	12-3	8:00	
		N/A	12-4	0800	1630
		176809	12-4	0800	
		NA	12-4	0800	
		NA	12-4	8:00	
		N/A	12-5	0800	1600
		176809	12/5	0800	
		N/A	12-5	8:00	
		N/A	12-6	0800	1630
		N/A	12-6	8:00	
		NA	12-6	8:00	
		176809	12/6	8:00	
		N/A	12/9	0800	0810
21					
22					
23					
24					
25					
26					
27					
28					
29					
30					

N/A

URS	Safety Management Standard **HAZARDOUS WORK PERMIT**	Attachment 052-3 AMER Issue Date: July 2000 Revision 2: December 2009

HWP Number: NFSS-14-~~005~~ 007	Work Location:	Niagara Falls Storage Site, Lewiston, NY	
HWP Job Description: Remove batteries and hydraulic oil from Scissor Lift (Up-Right Tiger Lift), containerize these on site; collect paint sample from Scissor Lift with hand tools (scrapers) for lab analysis	Start Date/Time:	May 14, 2014	0700
	Expiration Date/Time:	May 14, 2014	1800
	Requested By:	[redacted]	
Type of HWP: ☐ General ☒ Job-Specific	Request Date:	May 14, 2014	
Is a Radiological/ALARA Review Required? ☐ No ☒ Yes			

Chemicals/Substances Present	Combustible/Flammable Vapors	Pre-Job Radiation Levels	Site Surveys See Attached Survey data			
			Type	Number	Date	By
Hydraulic oil		General Area Dose Rate:				
Wet cell batteries		Job-Specific Dose Rate:		8 mR/h		
		Contamination Level:	Alpha/Beta not to exceed			1000 dpm
		%DAC:	N/A			
		Other (specify):				

Required Personnel Protective Clothing and Equipment

Hands	Feet/Legs	Body
☐ Cotton Work Gloves	☒ Steel-Toe/Shank Boots/Shoes	☐ Cotton Coveralls
☐ Latex Gloves	☒ Disposable Shoe Covers	☒ Tyvek® Coveralls (regular)
☐ Rubber Gloves	☐ Other (specify):	☐ Tyvek® Coveralls (coated)
☒ Other (specify): Nitrile & Neox gloves		☐ Other (specify):
Respiratory	**Head/Eyes**	**Miscellaneous**
☒ Full-face (Negative Pressure)*	☒ Hard Hat	☐ Tape Coveralls to Gloves & Boots
☐ Powered Air-Purifying*	☒ Safety Glasses	☐ Fall Protection
☐ Supplied Air/SCBA	☐ Goggles	☐ Hearing Protection
☒ Other (specify): During paint sampling	☒ Face Shield	☐ Other (specify):
*Specify cartridge or canister type: P100	☒ Other (specify): During battery handling	

Special Instructions, Requirements, and Limiting Hazardous Conditions	
☒ MSDS	☒ "Buddy System" in Effect
☐ Fire Watch	☒ Safety and Health Personnel
☐ Portable Fire Extinguisher	☐ Special Training/Pre-Job Briefing
☐ Lockout/Tagout	☐ Excavation Permit
☐ Confined Space Entry	☐ Fire Retardant Clothing
☐ Pre-Entry Monitoring	☐ Special Personnel Frisking Considerations
☐ Emergency Response Equipment	☐ Dose/Contaminant Reduction Considerations
☐ Radio Communication	☐ Stay Time Controls
☒ Portable Eyewash	☐ Other (specify):

Dosimetry	Indiv.	Group
TLD Badge		
Extremity TLD		
Pocket dosimeter		
Other (specify)		
IH Monitoring	**Indiv.**	**Group**
Air sampler		
Passive sampler		
Grab sampler		
Other (specify)		

Work Zone Entry Log

Print Name	Signature	Employee #	TLD Initial	TLD Exit	Total Dose	Time Enter	Time Exit	Time Enter	Time Exit

[redacted]			Date 8/6/2014
Site SHO: [redacted]		Reason: Work was Completed but did not Sign RWP	
Site Manager: [redacted]			

Attachment 52-2

URS

RADIATION WORK PERMIT

RWP Number: NFSS-14-008

RWP Job Description: Additional Soil Sampling

Type of RWP: ◉ General ◉ Job-Specific

Work Location: NFSS

Start Date/Time: 06/17/14 0700

Expiration Date/Time: 07/11[redacted]

[redacted]

Request Date: 6/16/2014

Rad Training Requirements	ALARA Requirements	Survey Frequency	Pre-Job Radiation Levels
☐ Rad Worker I	☐ ALARA Review	☐ Constant HP Coverage	☐ General Area Dose Rate:
☐ Rad Worker II	☒ Pre-Job Briefing	☒ Periodic HP Coverage*	☐ Job-Specific Dose Rate:
☐ Rad Safety Officer	☐ Air Sampling	*Define periodic coverage below	☐ Contamination Level:
☒ Site Specific	☐ Other (specify):	Friskers Available	☐ % DAC:
☑ Other (specify):			☐ Other (specify):

Required Personnel Protective Clothing and Equipment

Anti-Cs		Monitoring
☐ Hood	☐ Rubber Gloves	☒ TLD
☐ Coveralls	☐ Cotton Glove Liners	☐ Extremity TLD
☐ Coveralls (2 pair)	☐ Tape Coveralls at Wrist and Ankles	☐ Pocket dosimeter
☐ Rubber Shoe Covers	☒ Other (specify): Gloves when ~~handing~~ handing Soil AKS 6/16/14	☐ Hand-held monitor
☐ Cloth Boot Covers		☐ Hand/foot monitor/frisker
☐ Latex Gloves		☐ Whole body frisk
☐ Cotton Work Gloves		☒ Other (specify): Biossay

Respiratory Protection	Special Precautions	Additional Precautions/Requirements
☐ Full-face (Negative Pressure)*	☐ "Buddy System" in Effect	Describe:
☐ Powered Air-Purifying*	☐ Special Training or Pre-Job Briefing Required	
☐ Supplied Air	☐ Special Personnel Frisking Considerations	
☐ Self-contained Breathing Apparatus	☐ Dose/Contamination Reduction Considerations	
☐ Other (specify):	☐ Stay Time Controls	
* Specify cartridge or canister type	☐ Other (specify):	

Radiological Work Zone Entry Log

[redacted]	Social Sec. No.	TLD Initial	TLD Exit	Total Dose	Time Enter	Time Exit	Time Enter	Time Exit
[redacted]					6/17/14		1400	1600
					6/18/14		0800	1630
					6/19/14		0800	1630
[redacted]							Date	
							07/31/2014	

RWP Number NFSS-14-008 Page 2 of 3

Job Descriptions Soil Sampling Issue Date

Radiological Work Zone Entry Log

	Print Name	Signature	Employee #	Date	Time (24 hr clock) Entry	Exit
	[redacted]	[redacted]	Russo	6/20/14	0800	0430
			URS			
			URS			
			Intomes			
			URS	6/23/14	0800	
			Russo			
			URS			
			Intomes			
			Russo	6/24/14		
			Intomes			
			URS			
			Russo			
			URS			
			URS	6/25/14		
			Russo			
			Intomes			
			URS			
			Intomes	6-26-14		
			URS	6-26-14		
			URS			
			Russo			
			Intomes	6-27-14		
			URS			
			URS			
			Russo			
			Intomes	6-30-14		
			Russo			
			URS			
			URS			
			Intomes	7-1-14		

RWP/ HWP Number NFSS-14-008 Page 3 of 3

Job Descriptions Soil Sampling Issue Date

Radiological/Hazardous Work Zone Entry Log

	Print Name	Signature	Employee #	Date	Time (24 hr clock) Entry	Exit
	[redacted]			7-2-14		
				7/2		
				7/2		
				7/3		
				7-3-14		
				7-3-14		
				7-7-14		
				7-7-14		
				7-7-14		
11						
12						
13						
14						
15						
16						
17						
18						
19						
20						
21						
22						
23						
24						
25						
26						
27						
28						
29						
30						

URS	Health, Safety and Environment **HAZARDOUS WORK PERMIT**	Attachment 052-3 NA Issue Date: July 2000 Revision 2: December 2009

HWP Number:	NFSS-14-009	Work Location:	NFSS Site
HWP Job Description: Baker Tank Sediment Removal		Start Date/Time:	06/27/2014 0800
		Expiration Date/Time:	07/11/2014 1700
		Requested By:	[redacted]
Type of HWP: ☐ General ☒ Job-Specific		Request Date:	6/26/2014
Is a Radiological/ALARA Review Required? ☒ No ☐ Yes			

Chemicals/Substances Present	Combustible/Flammable Vapors	Pre-Job Radiation Levels	Site Surveys			
liquid/sediment from previous excavations (possible U)		General Area Dose Rate:	Type	Number	Date	By
		Job-Specific Dose Rate:				
		Contamination Level:				
		%DAC:				
		Other (specify):				

Required Personnel Protective Clothing and Equipment

Hands	Feet/Legs	Body
☐ Cotton Work Gloves	☒ Steel-Toe/Shank Boots/Shoes	☐ Cotton Coveralls
☒ Latex Gloves (Nitrile)	☒ Disposable Shoe Covers	☐ Tyvek® Coveralls (regular)
☐ Rubber Gloves	☐ Other (specify):	☒ Tyvek® Coveralls (coated)
☐ Other (specify):		☐ Other (specify):
Respiratory	**Head/Eyes**	**Miscellaneous**
☐ Full-face (Negative Pressure)*	☒ Hard Hat	☒ Tape Coveralls to Gloves & Boots
☐ Powered Air-Purifying*	☒ Safety Glasses	☐ Fall Protection
☐ Supplied Air/SCBA	☐ Goggles	☐ Hearing Protection
☐ Other (specify):	☒ Face Shield (pressure washing)	☒ Other (specify): HP Coverage for Frisking; full-body harness & extraction rope
*Specify cartridge or canister type:	☐ Other (specify):	

Special Instructions, Requirements, and Limiting Hazardous Conditions	
☐ MSDS	☐ "Buddy System" in Effect
☐ Fire Watch	☐ Safety and Health Personnel
☐ Portable Fire Extinguisher	☒ Special Training/Pre-Job Briefing
☐ Lockout/Tagout	☐ Excavation Permit
☒ Confined Space Entry	☐ Fire Retardant Clothing
☒ Pre-Entry Monitoring	☐ Special Personnel Frisking Considerations
☐ Emergency Response Equipment	☐ Dose/Contaminant Reduction Considerations
☐ Radio Communication	☐ Stay Time Controls
☐ Portable Eyewash	☐ Other (specify):

Dosimetry	Indiv.	Group
TLD Badge	X	
Extremity TLD		
Pocket dosimeter		
Other (specify)		
IH Monitoring	**Indiv.**	**Group**
Air sampler		
Passive sampler		
Grab sampler		
Other (specify)		

Work Zone Entry Log

Print Name	Signature	Employee #	TLD Initial	TLD Exit	Total Dose	Time Enter	Time Exit	Time Enter	Time Exit
[redacted]		Russo #2							
		Russo #3							
		Russo (air monitoring & CSE permit handling only)							
		Russo #3							
		Russo #2							
		Russo #2							
		Russo #3							

Approvals	Date	Termination	Date
Site RSO: [redacted]	6/26/14	Site RS[redacted]	8/6/2014
Site SHO:	6-27-14	Reaso[redacted]	
Site Manager:		Work Completed	

URS	Health, Safety and Environment **CONFINED SPACE ENTRY PERMIT**	Attachment 010-1 NA Issue Date: October 2000 Revision 7: December 2009

Space to be Entered: Baker ("Frac") Tank SV3 9 6 8 3 L
Permit No. NFSS-14-009CSE
Location/Description: NFSS-north of Screw Bldg.
Purpose of Entry: remove sediment from tank, decon tank
Authorized Duration of Permit: Date: 6-27-14 to: —
Time: 10:30 to: 17:00

PERMIT SPACE HAZARDS (Indicate specific hazards with initials.)

S.M.	Oxygen deficiency (less than 19.5%)
	Oxygen enriched (greater than 23.5%)
	Flammable gases or vapors (greater than 10% of LEL)
	Airborne combustible dust (meets or exceeds LEL)
	Toxic gases or vapors (greater than PEL or TLV)
	Mechanical Hazards
	Electrical Hazards
	Chemical Hazards
	Engulfment
	Other:

EQUIPMENT REQUIRED FOR ENTRY AND WORK
Specify as required:

Personal Protective Equipment:	Level C minus respirator
Respiratory Protection:	—
Atmospheric Testing/Monitoring:	MSA Altair 5X Meter (Serial #1023)
Communication:	verbal
Permits:	HWP # NFSS 14-009
Rescue:	Full-body harness w/rope
Hand/Power Tools:	shovel, bucket
Blocking/Blanking:	NA
Other:	

PREPARATION FOR ENTRY (Check after steps have been taken.)

- ☐ Notify affected groups of service interruption.
- ☐ Isolation Methods ☐ Lockout/Tagout ☐ Blank/Blind
- ☐ Purge/Clean ☐ Inert ☒ Ventilate
- ☒ Atmospheric Test ☐ Barriers ☐ Other:
- ☒ Personnel Awareness:
  - ☒ Pre-entry briefing on specific hazards and control methods
  - ☒ Notify contractors of permit and hazard conditions
  - ☐ Other:
- ☐ Additional Notifications required:

Started ventilation at 0850 (Americ Blower w/hose [110V])

AUTHORIZED ENTRANTS (List by name or attach roster):

[redacted]

RESCUE PERSONNEL / SERVICE RESCUE EQUIPMENT:

Phone Number: 911
Contact Method: cell phone
Phone Number:
Contact Method:

AUTHORIZED ATTENDANTS (List by name or attach roster):

[redacted] URS)
(USSO)
SO)

ATMOSPHERIC TESTING FREQUENCY: every 5-10 minutes initially then every 20 minutes

Name of Atmosphere Tester: [redacted]

PERMIT CANCELLED BY (if required):

Date: 6-27-14 Time: 14:00
Reason for Cancellation: Completed work for today

URS	Health, Safety and Environment CONFINED SPACE ENTRY PERMIT	Attachment 010-1 NA Issue Date: October 2000 Revision 7: December 2009

12:10

	Pre-entry	Entry					
Testing	Result	Result	Result	Result	Result	Result	Result
Time (Indicate am/pm)	10:38	10:48	10:58	11:08	11:28	11:47	12:07
Oxygen (%)	20.8	21.0	21.0	20.9	21.0	21.1	20.8
LEL Flammability (%)	0	0	0	0	0	0	0
H_2S (ppm)	0	0	0	0	0	0	0
~~Toxic (Specify)~~	—	—	—	—	—	—	—
~~Cl_2 (ppm)~~	—	—	—	—	—	—	—
CO (ppm)	0	0 over bkgrd.	0 over bkgrd.	0 over bkgrd.	0 over bkgrd	0 over bkgrd.	0
~~SO_2 (ppm)~~	—	—	—	—	—	—	—
Temperature °F/°C (Kestral 3000)	Ambient 85°F	—	85°F	—	84°F	—	84°F
Other (Raytek Mini-temp Infrared Gun)	Inside Tank: 75°F bottom, 110°F top	—	—	70°F bottom, 116°F top	—	68°F bottom, 122°F top	—
Tester Initials	[redacted]						

[redacted] exited Frac Tank

AUTHORIZATION BY ENTRY SUPERVISORS

I verify review of this permit and verify that all necessary precautions have been taken to provide for a safe entry into and work in this confined space.

[redacted] Date 6-27-14 Time 10:45

Printed Name	Signature	Date	Time

THIS PERMIT MUST BE POSTED AT THE CONFINED SPACE.

THIS PERMIT EXPIRES AT THE END OF THE SHIFT ON WHICH IT WAS ISSUED.

A NEW PERMIT MUST BE ISSUED FOR WORK THAT CONTINUES INTO THE NEXT SHIFT.

URS	Health, Safety and Environment **CONFINED SPACE ENTRY PERMIT**	Attachment 010-1 NA Issue Date: October 2000 Revision 7: December 2009

Space to be Entered: Baker ("Frac") Tank SV30683L Permit No. NFSS-14-010CSE

Location/Description: NFSS-north of Screw Bldg. Purpose of Entry: remove sediment from tank, decon tank

Authorized Duration of Permit: Date: 6-30-14 to: —
Time: 0805 to: 1310

PERMIT SPACE HAZARDS (Indicate specific hazards with initials.)

S.M.	Oxygen deficiency (less than 19.5%)
	Oxygen enriched (greater than 23.5%)
	Flammable gases or vapors (greater than 10% of LEL)
	Airborne combustible dust (meets or exceeds LEL)
	Toxic gases or vapors (greater than PEL or TLV)
	Mechanical Hazards
	Electrical Hazards
	Chemical Hazards
	Engulfment
	Other:

EQUIPMENT REQUIRED FOR ENTRY AND WORK
Specify as required:

Personal Protective Equipment:	Level C minus respirator
Respiratory Protection:	—
Atmospheric Testing/Monitoring:	MSA Altair 5X Meter (Div of #1023)
Communication:	verbal
Permits:	HWP# NFSS 14-009
Rescue:	Full-body harness w/rope
Hand/Power Tools:	shovel, bucket
Blocking/Blanking:	NA
Other:	

PREPARATION FOR ENTRY (Check after steps have been taken.)

- ☐ Notify affected groups of service interruption.
- ☐ Isolation Methods ☐ Lockout/Tagout ☐ Blank/Blind
- ☐ Purge/Clean ☐ Inert ☒ Ventilate
- ☒ Atmospheric Test ☐ Barriers ☐ Other:
- ☒ Personnel Awareness:
- ☒ Pre-entry briefing on specific hazards and control methods
- ☒ Notify contractors of permit and hazard conditions
- ☐ Other:
- ☐ Additional Notifications required:

started ventilation (Americ Blower w/hose [110V]) at 0735

AUTHORIZED ENTRANTS (List by name or attach roster):

[redacted]

RESCUE PERSONNEL / SERVICE RESCUE EQUIPMENT:

Phone Number: 911

Contact Method: cell phone

Phone Number:

Contact Method:

AUTHORIZED ATTENDANTS (List by name or attach roster):

[redacted]

ATMOSPHERIC TESTING FREQUENCY: every 10 minutes initially

Name of Atmosphere Tester: [redacted]

all 10 minute intervals

PERMIT CANCELLED BY (if required):

Date: 6-30-14 Time: 1310

Reason for Cancellation: Completion of removal of frac tank sediment

URS	Health, Safety and Environment CONFINED SPACE ENTRY PERMIT	Attachment 010-1 NA Issue Date: October 2000 Revision 7: December 2009

Continued over →

Testing	Pre-entry Result	Entry 1 Result		Entry 1 Result		Entry 2 Result Initial		Entry 2 Result		Entry 3 Result Initial		Entry 3 Result	
Time (Indicate am/pm)	0800	0810	0820	0830	0840	0910	0920	0930	0940	1100	1120	1130	1140
Oxygen (%)	20.8	20.8	20.8	20.8	20.8	20.8	20.8	20.8	20.8	20.8	20.8	20.8	20.8
Flammability (%)	0	0	0	0	0	0	0	0	0	0	0	0	0
H_2S (ppm)	0	0	0	0	0	0	0	0	0	0	0	0	0
Toxic-(Specify)	—	—	—	—	—	—	—	—	—	—	—	—	—
Cl_2(ppm)	—	—	—	—	—	—	—	—	—	—	—	—	—
CO (ppm)	0	0	0	0	0	0	0	0	0	0	0	0	0
SO_2 (ppm)	—	—	—	—	—	—	—	—	—	—	—	—	—
Temperature °F/°C	77°F	77°F	—	77°F	—	81°F	—	83°	—	86°F	—	85°F	—
Other (Inside Frac Tank Temps.)	74°F bottom 85°F top	—	—	75°F-B 83°F-T	—	80°F-B 90°F-T	—	82°F-B 109°F-T (max.)	—	85°F-B 117°F-T (max.)	—	72°F-B 101°F-T	—
Tester Initials	[redacted]												

Kestrel 3000

Raytech Minitemp Infrared gun

AUTHORIZATION BY ENTRY SUPERVISORS

I verify review of this permit and verify that all necessary precautions have been taken to provide for a safe entry into and work in this confined space.

[redacted] Date 6-30-14 Time 0805

Printed Name	Signature	Date	Time

THIS PERMIT MUST BE POSTED AT THE CONFINED SPACE.

THIS PERMIT EXPIRES AT THE END OF THE SHIFT ON WHICH IT WAS ISSUED.

A NEW PERMIT MUST BE ISSUED FOR WORK THAT CONTINUES INTO THE NEXT SHIFT.

Initial Entry 0805 → 0845
2nd Entry 0910 → 0952
3rd Entry 1107 → 1147

Entry 4

	Initial				
Time	1219	1229	1239	1249	—
O_2%	20.8	20.8	20.8	20.8	—
LEL%	0	0	0	0	—
CO	0	1	0	0	—
H_2S	0	0	0	0	—
Ambient Air Temp. (°F)	85°F	—	84°F	—	—
Temps. inside tank	84°F-B 106°F-T (max.)	—	84°F-B 108°F-T (max.)	—	—
Tester Initials	[redacted]				—

4th Entry 1219 → 1252

6-30-14

[redacted]

URS	Health, Safety and Environment **HEAT STRESS MONITORING RECORD**	Attachment 018-2 NA Issue Date: May 2001 Revision 8: September 2012

Date: 6-30-14 Safety Representative: [redacted]

Worker's Name: [redacted] Subcontractor: Russo

Work Activity/Equipment: Baker ("Frac") Tank Cleanout/Decon (Level C PPE minus respirator)

	Time	Work-Rest Cycle	Aural Temp (°F)	Pulse (BPM) P_1	P_2	P_1-P_2	Comments
Pre-Entry Baseline	0745	—	98.0°	83	—	—	Pre-Entry Baseline Street Clothing (Level D)
Post Entry 1	0847	40 min. W	98.7°	140	126	14	
	0907	Rested 20 minutes	97.7	98	—	—	Drank fluids during break
Post Entry 2	0958	42 min. W	99.0°	110	—		Will take extended cooling break in bldg. 429
	1052	Rested 1 hour	97.7°	84	—	—	1 hr. rest break taken inside Bldg. 429
Post Entry 3	1149	40 min. W	99.9°	146	129	17	Break outside tank for 30 minutes; drank fluids
	1119	Rested 30 minutes	97.7	104	—	—	After 30 minute rest break outside frac tank
Post Entry 4	1258	33 min. W	99.1	125	—	—	Done for the day inside frac tank
	1328	Rested 30 min.	97.6	88	—	—	Rested 30 minutes

Brain ThermoScan 4520

CVS C20 Fingertip Pulse Oximeter

1

<99.6°F

<110 bpm

URS	Health, Safety and Environment **CONFINED SPACE ENTRY PERMIT**	Attachment 010-1 NA Issue Date: October 2000 Revision 7: December 2009

Space to be Entered: Baker ("Frac") Tank SV30683L Permit No. NFSS-14-011CSE

Location/Description: NFSS-north of Screw Bldg. Purpose of Entry: decon frac tank with steam cleaner

Authorized Duration of Permit: Date: 7-1-14 to: ——

Time: _____ to: _____

PERMIT SPACE HAZARDS (Indicate specific hazards with initials.)

S.M. Oxygen deficiency (less than 19.5%)

_____ Oxygen enriched (greater than 23.5%)

_____ Flammable gases or vapors (greater than 10% of LEL)

_____ Airborne combustible dust (meets or exceeds LEL)

_____ Toxic gases or vapors (greater than PEL or TLV)

_____ Mechanical Hazards

_____ Electrical Hazards

_____ Chemical Hazards

_____ Engulfment

_____ Other: _____

EQUIPMENT REQUIRED FOR ENTRY AND WORK
Specify as required:

Personal Protective Equipment: Level C (minus respirator) + face shield

Respiratory Protection: ——

Atmospheric Testing/Monitoring: MSA Altair 5X Meter (DNal # 1023)

Communication: verbal

Permits: HWP# NFSS14-009

Rescue: Full-body harness w/rope

Hand/Power Tools: steam cleaner

Blocking/Blanking: ——

Other: _____

PREPARATION FOR ENTRY (Check after steps have been taken.)

☐ Notify affected groups of service interruption.

☐ Isolation Methods ☐ Lockout/Tagout ☐ Blank/Blind

☐ Purge/Clean ☐ Inert ☒ Ventilate

☒ Atmospheric Test ☐ Barriers ☐ Other:

☒ Personnel Awareness:

☒ Pre-entry briefing on specific hazards and control methods

☒ Notify contractors of permit and hazard conditions

☐ Other:

☐ Additional Notifications required:

AUTHORIZED ENTRANTS (List by name or attach roster):

[redacted] (Russo) e

[redacted] (Russo)

started ventilation (Americ Blower w/hose [110V]) at 0735

RESCUE PERSONNEL / SERVICE RESCUE EQUIPMENT:

Phone Number: 911

Contact Method: cell phone

Phone Number: _____

Contact Method: _____

AUTHORIZED ATTENDANTS (List by name or attach roster):

[redacted] URS)

[redacted] (Russo) e

[redacted] (Russo)

ATMOSPHERIC TESTING FREQUENCY: [redacted] every 10 minutes

Name of Atmosphere Tester: [redacted] Mc [redacted]

later every 20 minutes

PERMIT CANCELLED BY (if required):

Date: 7-1-14 Time: 10:25

Reason for Cancellation: frac tank decon completed

URS	Health, Safety and Environment CONFINED SPACE ENTRY PERMIT	Attachment 010-1 NA Issue Date: October 2000 Revision 7: December 2009

Testing	Pre-Entry Result	Entry 1 Result	Result	Result	Result	Result	Result	Result	Result	Result	Result
Time (Indicate am/pm)	0757	0820	0830	0840	0850	0900	0910	0920	0930	0940	0950	1010
Oxygen (%)	20.8	20.8	20.8	20.8	20.8	20.8	20.8	20.8	20.8	20.8	20.8	20.8
Flammability (%)	0	0	0	0	0	0	0	0	0	0	0	0
H_2S (ppm)	0	0	0	0	0	0	0	0	0	0	0	0
Toxic-(Specify)	—	—	—	—	—	—	—	—	—	—	—	—
Cl_2(ppm)	—	—	—	—	—	—	—	—	—	—	—	—
CO (ppm)	0	0	0	0	0	0	0	0	0	0	1	0
SO_2 (ppm)	—	—	—	—	—	—	—	—	—	—	—	—
Ambient Air Temperature °F/~~C~~	81°F	81°F	—	81°	—	84°F	—	85°F	—	86°F	—	—
Other Inside Tank	77°F-bottom 84°F-top	—	—	76°F-B 80°F-T	—	74°F-B 84°F-T	—	77°F-B 92°F-T	—	—	69°F-B 89°F-T	—
Tester Initials	[redacted]											

Kestral 3000

Raytek Minitemp Infrared Gun

AUTHORIZATION BY ENTRY SUPERVISORS

I verify review of this permit and verify that all necessary precautions have been taken to provide for a safe entry into and work in this confined space.

[redacted] Date 7-1-14 Time 0800

Printed Name	Signature	Date	Time

THIS PERMIT MUST BE POSTED AT THE CONFINED SPACE.

THIS PERMIT EXPIRES AT THE END OF THE SHIFT ON WHICH IT WAS ISSUED.

A NEW PERMIT MUST BE ISSUED FOR WORK THAT CONTINUES INTO THE NEXT SHIFT.

Entry 1 0817 → 1022

URS	Health, Safety and Environment HEAT STRESS MONITORING RECORD	Attachment 018-2 NA Issue Date: May 2001 Revision 8: September 2012

Date: 7-1-14 Safety Representative: Steve Moeller

[redacted] contractor: Russo

Work Activity/Equipment: Baker ("Frac") Tank Decon (Level C minus respirator)

	Time	Work-Rest Cycle	Aural Temp (°F) ~~(°C)~~	Pulse (BPM) P_1	P_2	P_1-P_2	Comments
Pre-entry baseline	0753	—	97.2°	95	—		Pre-entry baseline reading (Matt) Level D PPE
Pre-entry baseline	0809	—	96.9	61	—		Pre-entry baseline Dave Buton (Level D)
Post-Entry 1	1023	After 2hr. 5min. W	98.5	107	—		Work in frac tank completed

Appendix E-4-1

Radiation Survey Log

Project Radiation Survey Log

				Project Name				
Site	**Yr**	**Type**	**Number**	**Survey #**	**Date**	[redacted]	**Description**	**# of pages**
NFSS	13	IN	001	NFSS-13-IN-001	11/4/2013	[redacted]	Incoming Coolers	1
NFSS	13	IN	002	NFSS-13-IN-002	11/5/2013	[redacted]	Drill Rig	1
NFSS	13	IN	003	NFSS-13-IN-003	11/5/2013	[redacted]	Trailer	1
NFSS	13	IN	004	NFSS-13-IN-004	11/5/2013	[redacted]	Truck	1
NFSS	13	IN	005	NFSS-13-IN-005	11/5/2013	[redacted]	Driller Hand Tools	1
NFSS	13	IN	006	NFSS-13-IN-006	11/6/2013	[redacted]	Incoming coolers	1
NFSS	13	OT	007	NFSS-13-OT-007	11/6/2013	[redacted]	Sample Shipment	1
NFSS	13	IN	008	NFSS-13-IN-008	11/8/2013	[redacted]	Incoming Tools	1
NFSS	13	OT	009	NFSS-13-OT-009	11/8/2013	[redacted]	Sample Shipment	1
NFSS	13	RT	010	NFSS-13-RT-010	11/8/2013	[redacted]	Limited Release survey for rig repair	1
NFSS	13	OT	011	NFSS-13-OT-011	11/11/2013	[redacted]	Sample Shipment	1
NFSS	13	OT	012	NFSS-13-OT-012	11/12/2013	[redacted]	Sample Shipment	1
NFSS	13	OT	013	NFSS-13-OT-013	11/13/2013	[redacted]	Sample Shipment	1
NFSS	13	OT	014	NFSS-13-OT-014	11/14/2013	[redacted]	Sample Shipment	1
NFSS	13	OT	015	NFSS-13-OT-015	11/15/2013	[redacted]	Sample Shipment	1
NFSS	13	RT	016	NFSS-13-RT-016	11/15/2013	[redacted]	Dose Rate Waste Accumulation Area	1
NFSS	13	OT	017	NFSS-13-OT-017	11/18/2013	[redacted]	Sample Shipment	1
NFSS	13	IN	018	NFSS-13-IN-018	11/18/2013	[redacted]	Incoming Rool Off	1
NFSS	13	OT	019	NFSS-13-OT-019	11/19/2013	[redacted]	Sample Shipment	1
NFSS	13	IN	020	NFSS-13-IN-020	11/19/2013	[redacted]	Incoming Komatsu 286 Excavator	1
NFSS	13	IN	021	NFSS-13-IN-021	11/19/2013	[redacted]	Incoming coolers	1
NFSS	13	IN	022	NFSS-13-IN-022	11/20/2013	[redacted]	Incoming Tools & Equipment	1
NFSS	13	OT	023	NFSS-13-OT-023	11/20/2013	[redacted]	Sample Shipment	1
NFSS	13	IN	024	NFSS-13-IN-024	11/20/2013	[redacted]	Incoming G&R Pump	1
NFSS	13	OT	025	NFSS-13-OT-025	11/21/2013	[redacted]	Sample Shipment	1
NFSS	13	IN	026	NFSS-13-IN-026	11/21/2013	[redacted]	Russos' Incoming Tools & Equipment	1
NFSS	13	IN	027	NFSS-13-IN-027	11/21/2013	[redacted]	Incoming John Deere Loader	1
NFSS	13	EX	028	NFSS-13-EX-028	11/21/2013	[redacted]	Excavation MH06	7
NFSS	13	OT	029	NFSS-13-OT-029	11/22/2013	[redacted]	Sample Shipment	1
NFSS	13	EX	030	NFSS-13-EX-030	11/25/2013	[redacted]	Excavation IE9	10
NFSS	13	OT	031	NFSS-13-OT-031	11/25/2013	[redacted]	Sample Shipment	1
NFSS	13	IN	032	NFSS-13-IN-032	11/26/2013	[redacted]	Incoming Frac Tank	2
NFSS	13	OT	033	NFSS-13-OT-033	11/26/2013	[redacted]	Sample Shipment	1
NFSS	13	OT	034	NFSS-13-OT-034	11/26/2013	[redacted]	Sample Shipment	1
NFSS	13	OT	035	NFSS-13-OT-035	11/27/2013	[redacted]	Sample Shipment	1
NFSS	13	RT	036	NFSS-13-RT-036	11/27/2013	[redacted]	Dose Rate Waste Accumulation Area	1
NFSS	13	OT	037	NFSS-13-OT-037	12/2/2013	[redacted]	Sample Shipment	1
NFSS	13	EX	038	NFSS-13-EX-038	12/2/2013	[redacted]	Excavation IE10	9
NFSS	13	OT	039	NFSS-13-OT-039	12/3/2013	[redacted]	Sample Shipment	1
NFSS	13	EX	040	NFSS-13-EX-040	12/3/2013	[redacted]	Excavation IE11	8
NFSS	13	OT	041	NFSS-13-OT-041	12/4/2013	[redacted]	Sample Shipment	1
NFSS	13	EX	042	NFSS-13-EX-042	12/4/2013	[redacted]	Excavation IE12	7
NFSS	13	OT	043	NFSS-13-OT-043	12/5/2013	[redacted]	Sample Shipment	1
NFSS	13	EX	044	NFSS-13-EX-044	12/5/2013	[redacted]	Spoils Pile	1
NFSS	13	IN	045	NFSS-13-IN-045	12/5/2013	[redacted]	Incoming Coolers	1
NFSS	13	OT	046	NFSS-13-OT-046	12/6/2013	[redacted]	Sample Shipment	1
NFSS	13	OT	047	NFSS-13-OT-047	12/6/2013	[redacted]	Incoming G&R Pump	1
NFSS	13	OT	048	NFSS-13-OT-048	12/6/2013	[redacted]	Trailer	1
NFSS	13	OT	049	NFSS-13-OT-049	12/6/2013	[redacted]	6" Suction/Discharge Hoses	1
NFSS	13	OT	050	NFSS-13-OT-050	12/9/2013	[redacted]	Sample Shipment	1
NFSS	13	OT	051	NFSS-13-OT-051	12/10/2013	[redacted]	Outgoing Komatsu 286 Excavator	1
NFSS	13	OT	052	NFSS-13-OT-052	12/10/2013	[redacted]	Sample Shipment	1
NFSS	13	OT	053	NFSS-13-OT-053	12/10/2013	[redacted]	Russos' Outgoing Tools & Equipment	1
NFSS	13	OT	054	NFSS-13-OT-054	12/10/2013	[redacted]	Outgoing John Deere Loader	1
NFSS	13	OT	055	NFSS-13-OT-055	12/11/2013	[redacted]	Sample Shipment	1
NFSS	13	OT	056	NFSS-13-OT-056	12/12/2013	[redacted]	Sample Shipment	1

Type IN=incoming, OT=outgoing, RT=routine, EX=excavation, TN=Trench

Project Radiation Survey Log

Site	Yr	Type	Number	Survey #	Date	Initials	Description	# of pages
NFSS	13	OT	057	NFSS-13-OT-057	12/13/2013	[redacted]	Sample Shipment	1
NFSS	13	OT	058	NFSS-13-OT-058	12/13/2013	[redacted]	Coverall release	1
NFSS	13	RT	059	NFSS-13-RT-059	12/13/2013	[redacted]	Sizzor Lift Investigation	1
NFSS	13	OT	060	NFSS-13-OT-060	12/16/2013	[redacted]	Sample Shipment	1
NFSS	13	OT	061	NFSS-13-OT-061	12/17/2013	[redacted]	Sample Shipment	1
NFSS	13	OT	062	NFSS-13-OT-062	12/18/2013	[redacted]	Sample Shipment	1
NFSS	13	OT	063	NFSS-13-OT-063	12/19/2013	[redacted]	incoming coooler survey	1
NFSS	13	OT	064	NFSS-13-OT-064	12/19/2013	[redacted]	Sample Shipment	1
NFSS	13	OT	065	NFSS-13-OT-065	12/19/2013	[redacted]	Outgoing Drill Rig	1
NFSS	13	RT	066	NFSS-13-RT-066	12/19/2013	[redacted]	Waste accumulation	1
NFSS	14	IN	067	NFSS-14-IN-067	6/16/2014	[redacted]	Drill Rig Incoming	1
NFSS	14	IN	068	NFSS-14-IN-068	6/16/2014	[redacted]	Drilling tools	1
NFSS	14	IN	069	NFSS-14-IN-069	6/17/2014	[redacted]	Coolers	1
NFSS	14	OT	070	NFSS-14-OT-070	6/18/2014	[redacted]	Sample Shipment	1
NFSS	14	OT	071	NFSS-14-OT-071	6/19/2014	[redacted]	Sample Shipment	1
NFSS	14	IN	072	NFSS-14-IN-072	6/19/2014	[redacted]	Coolers	1
NFSS	14	IN	073	NFSS-14-IN-073	6/20/2014	[redacted]	Coolers	1
NFSS	14	OT	074	NFSS-14-OT-074	6/20/2014	[redacted]	Sample Shipment	1
NFSS	14	OT	075	NFSS-14-OT-075	6/23/2014	[redacted]	Sample Shipment	1
NFSS	IN	OT	076	NFSS-IN-OT-076	6/24/2014	[redacted]	Coolers	1
NFSS	14	OT	077	NFSS-14-OT-077	6/24/2014	[redacted]	Sample Shipment	1
NFSS	14	OT	078	NFSS-14-OT-078	6/25/2014	[redacted]	Gamma Survey of excavaton piles	1
NFSS	14	OT	079	NFSS-14-OT-079	6/25/2014	[redacted]	Sample Shipment	1
NFSS	14	IN	080	NFSS-14-IN-080	6/25/2014	[redacted]	Coolers	1
NFSS	14	OT	081	NFSS-14-OT-081	6/26/2014	[redacted]	Sample Shipment	1
NFSS	14	OT	082	NFSS-14-OT-082	6/26/2014	[redacted]	Coolers	1
NFSS	14	IN	083	NFSS-14-IN-083	6/27/2014	[redacted]	Excavator	1
NFSS	14	IN	084	NFSS-14-IN-084	6/27/2014	[redacted]	Tools	1
NFSS	14	IN	085	NFSS-14-IN-085	6/30/2014	[redacted]	Coolers	1
NFSS	14	IN	086	NFSS-14-IN-086	7/1/2014	[redacted]	Tools	1
NFSS	14	OT	087	NFSS-14-OT-087	7/1/2014	[redacted]	Sample Shipment	1
NFSS	14	OT	088	NFSS-14-OT-088	7/1/2014	[redacted]	Tools	1
NFSS	14	OT	089	NFSS-14-OT-089	7/2/2014	[redacted]	Drill Rig	1
NFSS	14	OT	090	NFSS-14-OT-090	7/2/2014	[redacted]	coolers returned empty unused (not surveyed)	1
NFSS	14	OT	091	NFSS-14-OT-091	7/2/2014	[redacted]	Batteries and hydraulic oil for disposal	1
NFSS	14	OT	092	NFSS-14-OT-092	7/2/2014	[redacted]	Sample Shipment	1
NFSS	14	OT	093	NFSS-14-OT-093	7/2/2014	[redacted]	Baker Tank	1
NFSS	14	RT	094	NFSS-14-RT-094	7/2/2014	[redacted]	Roll off and Manhole survey	1
NFSS	14	OT	095	NFSS-14-OT-095	7/2/2014	[redacted]	Excavator	1

Type IN=incoming, OT=outgoing, RT=routine, EX=excavation, TN=Trench

Appendix E-4-2

Radiation Field Survey Forms

Survey # NFSS-13-IN-001 Hand Equipment/ Items Survey Page 1 of 1

Project	NFSS 2013 Investigation	*Direct Scan*		*Smear Counting*			
		Meter/Probe	2241/44.9	Inst A	2929	Inst B	2929
Survey Type	INCOMING	Serial#	149394/PR251672	Serial#	137607	Serial#	147736
		Cal Due	092614	Cal Due	100314	Cal Due	102814
Tech	[redacted]	Bkg		Tech	[redacted]		
Date	11-04-13	Units	[redacted]	Date	110413		

Item #	Description	Direct Scan low	Direct Scan high	Direct Scan avg	Smear#	A/B	Ct Time	Counts * alpha	Counts * beta	notes
500	COOLER	20	40	30	500	A	2	PA ~~75~~ 0	75	
501	COOLER	25	42	32	501	B	2	PB ~~69~~ 0	69	
502	COOLER	27	41	35	502	A	2	3	89	
503	COOLER	29	43	31	503	B	2	0	64	
504	COOLER	31	40	33	504	A	2	0	88	
505	COOLER	30	44	39	505	B	2	0	65	
506	COOLER	31	42	33	506	A	2	2	77	
507	COOLER	34	41	35	507	B	2	PA ~~1~~ 0	86	
				[redacted]						

* See smear counter data sheet for dpm results

Survey ID NFSS·13·IN 2

Project	NFSS 2013 Investigation	URS Survey	Direct Scan	Fixed Point
		Description DRILL RIG	Meter/Probe M12 / 44.9	Meter/Probe
Survey Type	INCOMING		Serial# 102868/01512	Serial#
Tech	[redacted]	○ Denotes Smear Location	Cal Due ~~PAH~~ 10·11·14	Cal Due
		* Denotes Contact Readings	Bkg 10	Bkg
Date	11·04·13	All Readings in cpm unless other wise noted	Units CPM	Units

DIRECT SCAN LOW 5 HIGH 30 AVG 20

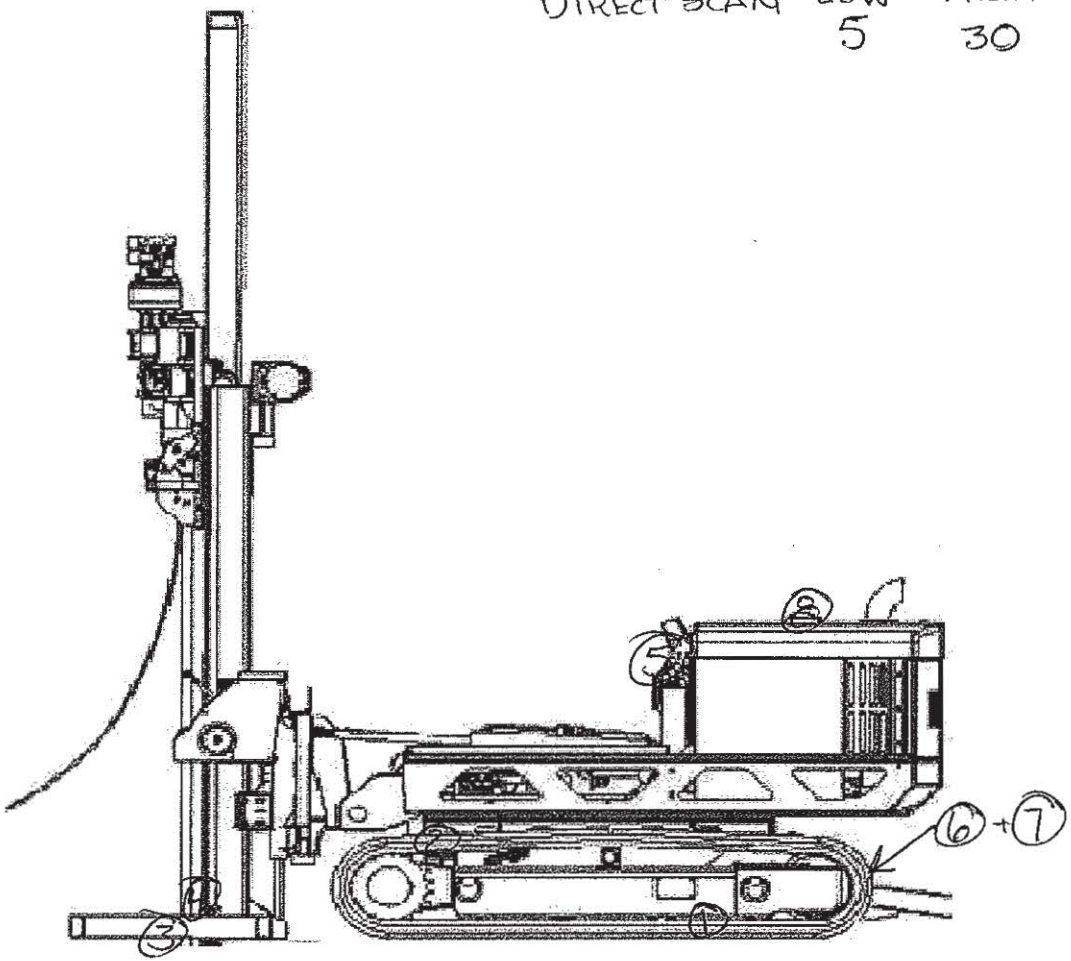

Smear Results*

Smear	Location	α cts	βγ cts	Ct time	Inst
1	TRACK	1	89	2	A
2	TRACK	0	85		
3	CONTROLS	0	74 ~~89~~		
4	TRACK	1	~~85~~ 74		
5	TRACK	1	~~67~~ 85		
6	DRILL PLTF	1	~~86~~ 67		
7	FILL DSEL	0	~~63~~ 86		
8	TOOLS	0	63		
9	PLATFORM	1	88		
10	ENG INT	0	74		

Inst A	~~137607~~ 2929	Inst B	
Serial#	137607	Serial#	
Cal Due	10 0314	Cal Due	
Tech	[redacted]		
Date	11·05·13		

* See smear counter data sheet for dpm results

Survey NFSS·13·IN·3

Project NFSS 2013 Investigation	URS Survey	Direct Scan	Fixed Point
	Description TRAILER	Meter/Probe M12/414.9	Meter/Probe
Survey Type INCOMING		Serial# 102868/01512	Serial#
[redacted]	○ Denotes Smear Location	Cal Due 10/1/14	Cal Due N/A
	* Denotes Contact Readings	Bkg 10	Bkg
Date 11·05·13	All Readings in cpm unless other wise noted	Units [redacted]	Units

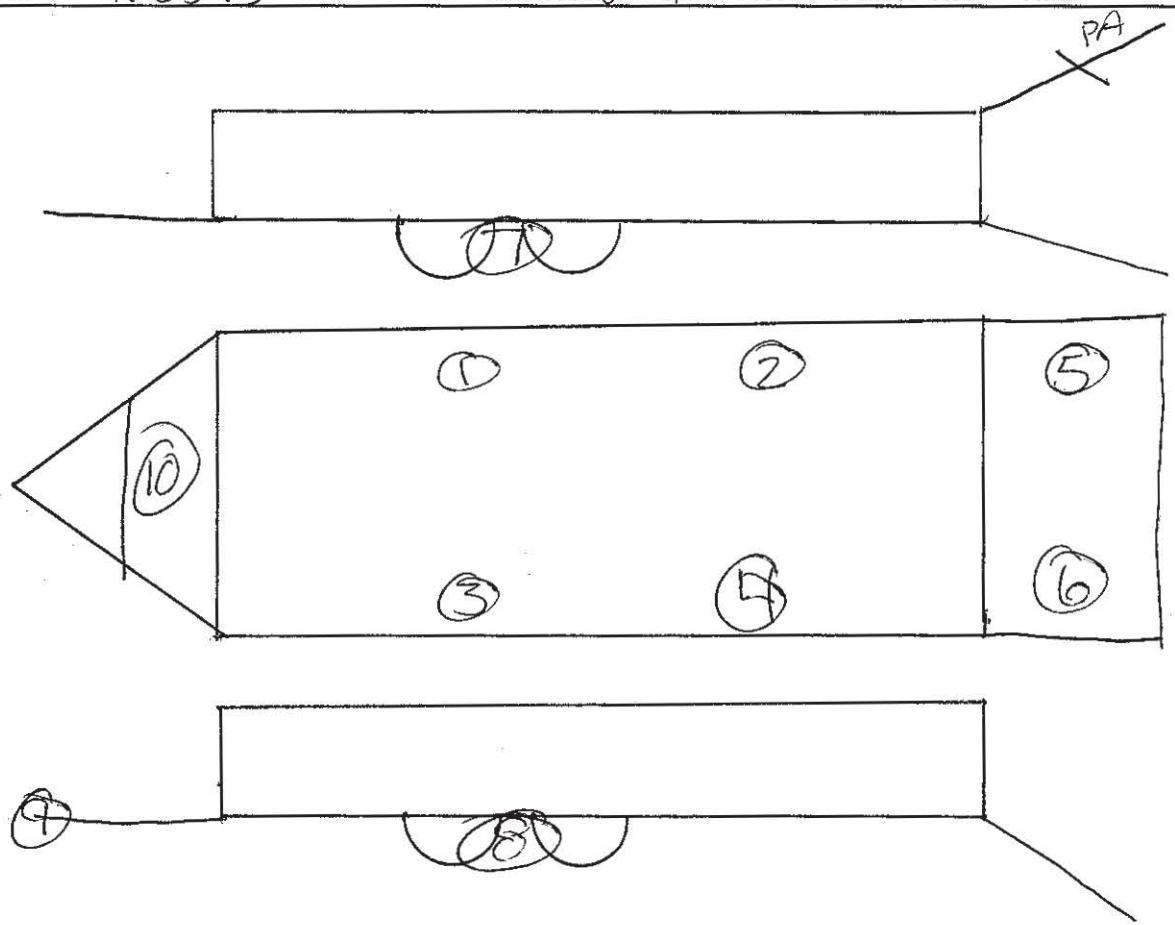

DIRECT SCAN (CPM) LOW 10 HIGH 40 AVG 30

Smear Results*

Smear	Location	α cts	βγ cts	Ct time	Inst
1	DECK	0	88	2	B
2	DECK	2	72		
3	DECK	2	85		
4	DECK	1	82		
5	RAMP	1	82		
6	RAMP	0	91		
7	TIRE	0	75		
8	TIRE	1	71		
9	HITCH	0	84		
10	FRAME	1	64		

Inst A		Inst B	2929
Serial#		Serial#	147736
Cal Due		Cal Due	10·28·14
[redacted]			
Date	11·05·~~14~~ 13 PA		

* See smear counter data sheet for dpm results

Survey ID NFSS·13·IN4

Project	NFSS 2013 Investigation	URS Survey	Direct Scan	Fixed Point
		Description TRUCK	Meter/Probe M12/401.9	Meter/Probe
Survey Type	IN COMING		Serial# 102868/01512	Serial# N/A
Tech	[redacted]	○ Denotes Smear Location	Cal Due 101114	Cal Due
		* Denotes Contact Readings	Bkg 10	Bkg
Date	11.05.13	All Readings in cpm unless other wise noted	Units CPM	Units

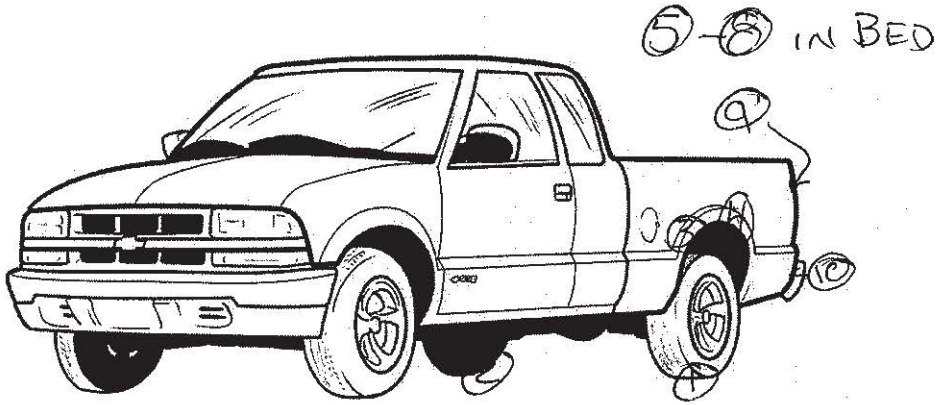

DIRECT SCAN (CPM) LOW 20 HIGH 40 AVG 30

Smear Results*

Smear	Location	α cts	βγ cts	Ct time	Inst
1	TIRE	0	74	2	A
2	TIRE	0	82		B
3	(L) BED	1	91		A
4	(R) BED	1	82		B
5	BED INS	1	75		A
6	BED INS	0	81		B
7	BED INS	0	68		A
8	BED INS	0	70		B
9	TAILGATE	1	78		A
10	BUMPER	4	70		
		0	91	AES 11/6/13	

Inst A	2929	Inst B	2929
Serial#	137607	Serial#	147736
Cal Due	100314	Cal Due	102814
[redacted]			
Date	11.05.13		

* See smear counter data sheet for dpm results

Survey ID NFSS·13·IN 165 PA

Project NFSS 2013 Investigation	URS Survey	Direct Scan	Fixed Point
	Description INCOMING	Meter/Probe M12/444.C1	Meter/Probe
Survey Type INCOMING		Serial# 102868/01512	Serial#
Tech [redacted]	○ Denotes Smear Location	Cal Due 10.11.14	Cal Due N/A
Date 11.05.13	* Denotes Contact Readings	Bkg 10	Bkg
	All Readings in cpm unless other wise noted	Units cpm	Units

DIRECT SCAN (CPM)

LOW	HIGH	AVG
0	20	15

Smear Results*

Smear	Location	α cts	βγ cts	Ct time	Inst
1	SHOVEL	0	80	2	A
2	SLEDGE	0	85		B
3	WRENCH	0	81		A
4	BRUSH	4	90		B

Inst A	29291	Inst B	29291
Serial#	137607	Serial#	147736
Cal Due	100314	Cal Due	102814
T[redacted]			
Date	110513		

* See smear counter data sheet for dpm results

Survey ID NFSS-13-IN-6

Hand Equipment/ Items Survey

Project NFSS 2013 Investigation

Survey Type Incoming

Tech [redacted]

Date 11/6/13

Direct Scan

Meter/Probe 2241/44-9

Serial# 149394/251672

Cal Due 9/26/14

Bkg 46

Units Cpm

Smear Counting

Inst A 2929/43-10-1 Inst B 2929/43-10-1

Serial# 137607/142936 Serial# 147736/50786

Cal Due 10/3/14 Cal Due 10/28/14

Tech [redacted]

Date 11/6/13.

Item #	Description	Direct Scan low	Direct Scan high	Direct Scan avg	Smear#	A/B	Ct Time	Counts * alpha	Counts * beta	notes
508	Cooler	20	40	30	1	A	2	1	83	
509		20	40	30	2	B		1	89	
510		20	40	30	3	B		1	89	
511		30	40	35	4	A		2	108	Recounted
512	20 [redacted]	~~40~~	40	30	5	B		1	55	
					4 recount			0	85	

* See smear counter data sheet for dpm results

Survey ID NFSS-13-OT-7

		Direct Scan		Dose Rate		Smear Counting	
Project	NFSS 2013 Investigation	Model	2241/44-9	Model	19	Instrument A	2929 - 43-10-1
Type	Outgoing	Serial#	149394/251673	Serial#	144060	Serial#	137607 / 1142936
Tech	[redacted]	Cal Due	9/26/14	Cal Due	1/7/2014	Cal Due	10/3/2014
Date	11/6/13	Bkg	46 cpm	Bkg	5 uR/h	Instrument B	
						Serial#	N/A
						Cal Due	
						Tech	
						Date	

Cooler #	Units	1 Top	2 Front	3 Right	4 Left	5 Back	6 Bottom	Location	Smear #	A/B	Time	Counts* alpha	Counts* beta	Ok to Release
492	cpm	30-40	35-45	27-32	24-36	25-27	26-40	Front	OT-1	A	1	1	416	✓
	µR/hr	4	4	5	4	5	5							
	cpm													
	µR/hr													
	cpm													
	µR/hr													
	cpm													
	µR/hr													
	cpm													
	µR/hr													
	cpm													
	µR/hr													
	cpm													
	µR/hr													
	cpm													
	µR/hr													
	cpm													
	µR/hr													
	cpm													
	µR/hr													

* See smear counter data sheet for dpm results

Survey ID NFSS-13-OT-8

		Direct Scan		Dose Rate		Smear Counting	
Project	NFSS 2013 Investigation	Model	M12/44-9 ~~2241/44-9~~	Model	19	Instrument A	
Type	OUTGOING	Serial#	~~149394~~	Serial#	144060	Serial#	
		Cal Due	~~102 8/08/015124~~ 101114	Cal Due	JAN 7 14	Cal Due	
Tech	[redacted]	Bkg	35 CPM	Bkg	6 µR/H	Instrument B	
						Serial#	
Date	110813					Cal Due	
						Tech	
						Date	

Cooler #	Units	1 Top	2 Front	3 Right	4 Left	5 Back	6 Bottom	Location	Smear #	A/B	Time	Counts* alpha	Counts* beta	Ok to Release
505.0	cpm	20-30	10-20	20-30	30-40	20-30	20-40	FRONT	OT-1	B	1	2	41	✓
	µR/hr	9	8	7	8	8	8							
419.0	cpm	20-30	20-30	20-30	20-40	20-30	20-30	RIGHT	OT-2	B	1	0	41	✓
	µR/hr	8	8	8	8	8	8							
486.0	cpm	20-30	20-30	20-40	20-40	20-30	20-40	BACK	OT-3	A	1	0	42	✓
	µR/hr	8	9	8	8	9	9							
497.0	cpm	20-30	20-40	20-40	20-30	20-30	20-40	BOTTOM	~~OT-4~~ OT-4	A	1	0	40	✓
	µR/hr	7	8	7	7	8	7							
	cpm													
	µR/hr													
	cpm													
	µR/hr													
	cpm													
	µR/hr						A							
	cpm													
	µR/hr						R							
	cpm													
	µR/hr													
	cpm													
	µR/hr													
	cpm													
	µR/hr													

* See smear counter data sheet for dpm results

Survey ID NFSS-13-IN-9

Hand Equipment/ Items Survey

Project NFSS 2013 Investigation

Survey Type INCOMING

Tech [redacted]

Date 110813

Direct Scan

Meter/Probe M12

Serial# 102868

Cal Due 10/1/14

Bkg 26

Units CPM

Smear Counting

Inst A 2929/43-10-1 Inst B 2929/43-10-1

Serial# 137607/142936 Serial# 147836/150786

Cal Due 10/3/14 Cal Due 10/28/14

Tech [redacted]

Date 11/8/13

Item #	Description	Direct Scan low	Direct Scan high	Direct Scan avg	Smear#	A/B	Ct Time	Counts * alpha	Counts * beta	notes
513	COOLER	20	40	30	1	B	2	0	74	
514	COOLER	20	40	30	2	A	2	1	69	

* See smear counter data sheet for dpm results

Survey ID NFSS-13-RT-010

Project	NFSS 2013 Investigation	URS Survey	Direct Scan	Fixed Point
Survey Type	RT	Description: limited Release for Maintenance	Meter/Probe	Meter/Probe: N/A
Tech	[redacted]	○ Denotes Smear Location	Serial#	Serial#
Date	11/8/2013	* Denotes Contact Readings	Cal Due	Cal Due
		All Readings in cpm unless other wise noted	Bkg	Bkg
			Units	Units

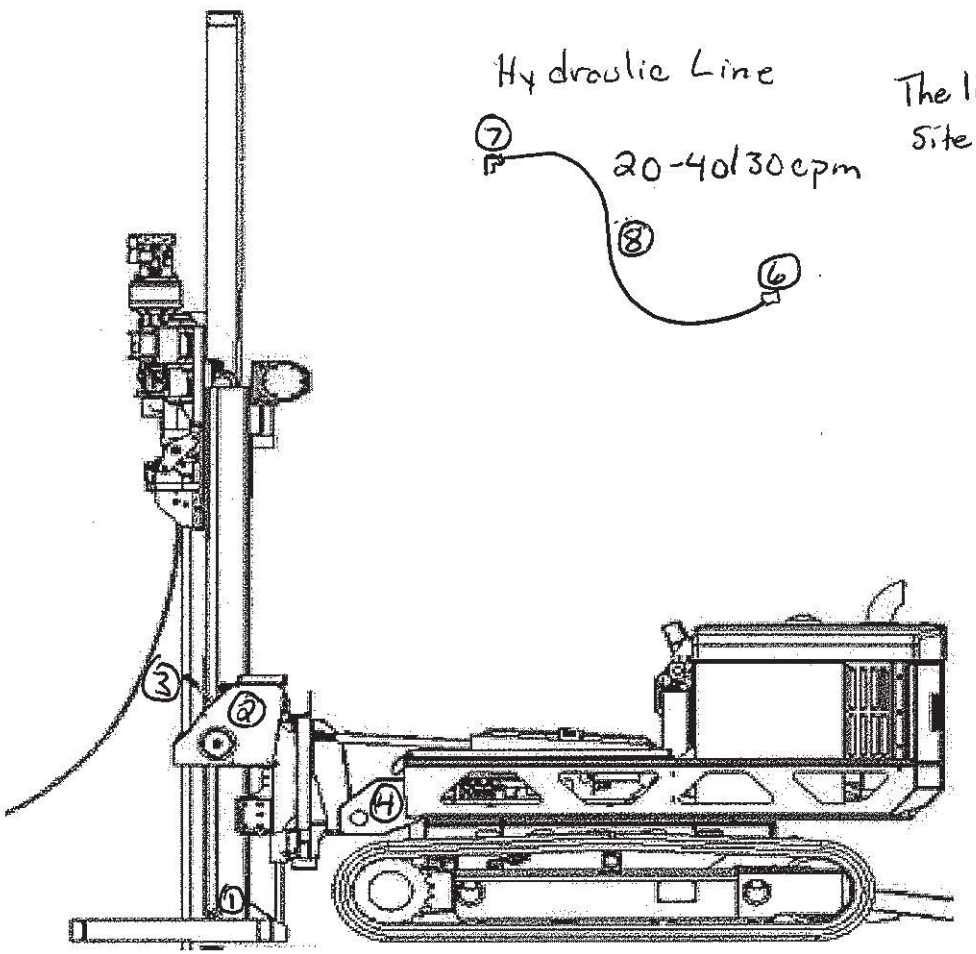

Smear Results*

Smear	Location	α cts	βγ cts	Ct time	Inst
1	Rig Stem	0	82	2	A
2	Control panel	0	73		B
3	Base Plate	0	71		A
4	underneath	0	70		B
5	Access pt	0	80		A
6	Hydralic end	1	81		B
7	end	0	83		A
8	end	0	83		B

Inst A	2929	Inst B	2929
Serial#	137607	Serial#	147736
Cal Due	10/3/24	Cal Due	10/28/14
Tech	[redacted]		
Date	11/8/13		

* See smear counter data sheet for dpm results

Survey ID NFSS-13-OT-11

		Direct Scan		Dose Rate		Smear Counting	
Project	NFSS 2013 Investigation	Model	M12	Model	M19	Instrument A	~~ADM-2~~ 2929 / 44.50.7
Type	OUTGOING	Serial#	102868	Serial#	144060	Serial#	137607
Tech	[redacted]	Cal Due	10/11/14	Cal Due	1/7/2014	Cal Due	10-03-14
		Bkg	16 CPM	Bkg	6μR/HR	Instrument B	
Date	11/11/13					Serial#	
						Cal Due	
						Tech	
						Date	

Cooler #	Units	1 Top	2 Front	3 Right	4 Left	5 Back	6 Bottom	Location	Smear #	A/B	Time	Counts* alpha	Counts* beta	Ok to Release
454.0	cpm	20-30	15-30	20-40	20-30	20-40	20-30	LEFT	1	A	1	0	48	✓
	μR/hr	6	5	5	5	7	6							
	cpm													
	μR/hr													
	cpm													
	μR/hr													
	cpm													
	μR/hr													
	cpm													
	μR/hr													
	cpm													
	μR/hr						P A							
	cpm													
	μR/hr													
	cpm													
	μR/hr													
	cpm													
	μR/hr													
	cpm													
	μR/hr													
	cpm													
	μR/hr													

* See smear counter data sheet for dpm results

Survey NFSS-13-OT-12

		Direct Scan		Dose Rate		Smear Counting	
Project	NFSS 2013 Investigation	Model	M12/44.9	Model	M19	Instrument A	2929
Type	OUTGOING	Serial#	102868/015129	Serial#	144060	Serial#	137607
[redacted]		Cal Due	10/11/14	Cal Due	1/7/14	Cal Due	10/3/14
		Bkg	30 CPM	Bkg	5μR/hr	Instrument B	
						Serial#	
Date	11/12/13					Cal Due	
						Tech	
						Date	

Cooler #	Units	1 Top	2 Front	3 Right	4 Left	5 Back	6 Bottom	Location	Smear #	A/B	Time	Counts* alpha	Counts* beta	Ok to Release
504.0	cpm	10-30	20-30	20-40	20-40	10-30	10-30	FRONT	1	A	1	0	45	✓
	μR/hr	5	6	5	7	5	5							
474.0	cpm	20-40	20-40	20-40	20-30	20-40	20-30	BOTTOM	2	A	1	0	47	✓
	μR/hr	6	5	5	6	5	5							
	cpm													
	μR/hr													
	cpm													
	μR/hr													
	cpm													
	μR/hr													
	cpm													
	μR/hr													
	cpm													
	μR/hr													
	cpm													
	μR/hr													
	cpm													
	μR/hr													
	cpm													
	μR/hr													
	cpm													
	μR/hr													

[redacted]

* See smear counter data sheet for dpm results

Survey ID NFSS-13-OT-13

		Direct Scan		Dose Rate		Smear Counting	
Project	NFSS 2013 Investigation	Model	M12/44-9	Model	M19	Instrument A	2929
Type	OUT GOING	Serial#	102868/015129	Serial#	144060	Serial#	137607
[redacted]		Cal Due	10/11/14	Cal Due	1/7/14	Cal Due	10/3/14
		Bkg	34 CPM	Bkg	5 µR/H	Instrument B	
						Serial#	
Date	11/13/13					Cal Due	N/A
						Tech	
						Date	

Cooler #	Units	1 Top	2 Front	3 Right	4 Left	5 Back	6 Bottom	Location	Smear #	A/B	Time	Counts* alpha	Counts* beta	Ok to Release
475.0	cpm	20-30	20-40	20-30	20-40	20-40	20-30	TOP	1	A	1	0	44	✓
	µR/hr	5	6	5	5	6	5							
506.0	cpm	20-30	20-30	20-30	20-30	20-30	20-30	FRONT	2	A	1	0	54	✓
	µR/hr	5	6	6	5	5	6							
478.0	cpm	20-40	20-40	20-40	20-40	20-40	20-40	BOTTOM	3	A	1	0	34	✓
	µR/hr	6	6	5	6	6	5							
	cpm													
	µR/hr													
	cpm													
	µR/hr													
	cpm													
	µR/hr													
	cpm													
	µR/hr													
	cpm													
	µR/hr													
	cpm													
	µR/hr													
	cpm													
	µR/hr													
	cpm													
	µR/hr													

* See smear counter data sheet for dpm results

Survey ID NFSS-13-OT-14

		Direct Scan		Dose Rate		Smear Counting	
Project	NFSS 2013 Investigation	Model	M12/44.9	Model	M19	Instrument A	2929
Type	OUTGOING	Serial#	102868/025129	Serial#	144060	Serial#	137607
[redacted]		Cal Due	10/11/14	Cal Due	1/7/14	Cal Due	10/03/14
		Bkg	38 cpm	Bkg	5μR/HR	Instrument B	
						Serial#	
Date	11.14.13					Cal Due	
						Tech	[redacted]
						Date	11/14

Cooler #	Units	1 Top	2 Front	3 Right	4 Left	5 Back	6 Bottom	Location	Smear #	A/B	Time	Counts* alpha	Counts* beta	Ok to Release
484.0	cpm	20-30	20-30	20-40	20-30	20-40	20-30	TOP	1	A	1	0	49	✓
	μR/hr	5	6	6	5	7	5							
490.0	cpm	10-30	20-40	20-40	20-30	20-40	10-30	TOP	2	A	1	0	39	✓
	μR/hr	5	6	5	7	6	5							
	cpm													
	μR/hr													
	cpm													
	μR/hr													
	cpm													
	μR/hr													
	cpm													
	μR/hr													
	cpm													
	μR/hr													
	cpm													
	μR/hr													
	cpm													
	μR/hr													
	cpm													
	μR/hr													
	cpm													
	μR/hr													

* See smear counter data sheet for dpm results

Survey ID NFSS-13-OT-015

		Direct Scan		Dose Rate		Smear Counting	
Project	NFSS 2013 Investigation	Model	M12/44.9	Model	M19	Instrument A	2929
Type	OUTGOING	Serial#	102868/015129	Serial#	144060	Serial#	137607
[redacted]		Cal Due	10/11/14	Cal Due	1/7/14	Cal Due	10.03.14
		Bkg	33 cpm	Bkg	5 µR/HR	Instrument B	
						Serial#	
Date	11/15/13					Cal Due	
						Tech	[redacted]
						Date	11/15/13

Cooler #	Units	1 Top	2 Front	3 Right	4 Left	5 Back	6 Bottom	Location	Smear #	A/B	Time	Counts* alpha	Counts* beta	Ok to Release
503-0	cpm	20-30	20-30	20-40	20-30	20-30	20-30	LEFT	1	A	1	0	47	✓
	µR/hr	6	5	7	6	7	7							
487.0	cpm	20-30	20-30	20-30	20-40	20-40	20-30	RIGHT	2	A	1	0	45	✓
	µR/hr	5	7	6	7	7	6							
	cpm													
	µR/hr													
	cpm													
	µR/hr													
	cpm													
	µR/hr													
	cpm													
	µR/hr													
	cpm													
	µR/hr													
	cpm													
	µR/hr													
	cpm													
	µR/hr													
	cpm													
	µR/hr													

* See smear counter data sheet for dpm results

Survey ID NFSS-13-DR-16

Project NFSS 2013 Investigation	URS Survey		
Survey Type DOSE RATE	Description DOSE RATE WASTE ACCUMULATION	Meter/Probe M/19	Meter/Probe
[redacted]		Serial# 144050	Serial#
	* Denotes Contact Readings	Cal Due 1/7/14	Cal Due
	All Readings in cpm unless other wise noted	Bkg 5	Bkg
Date 10/15/13		Units μR/Hr	Units

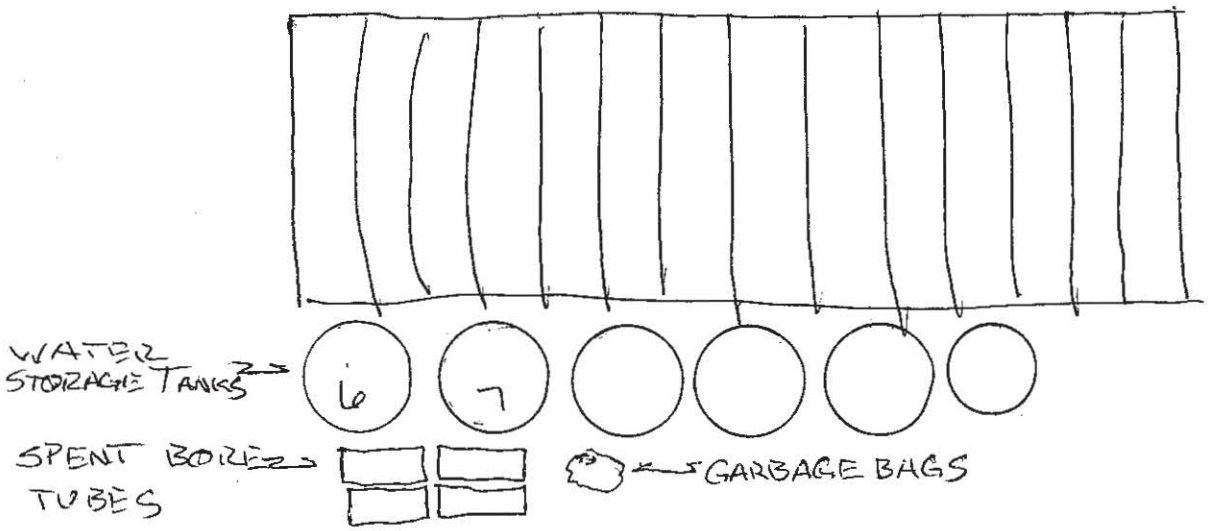

ALL DOSE RATES ON CONTACT 5μR/Hr

Notes WATER IN TANK 6 ONLY

* See smear counter data sheet for dpm results

Survey ID NFSS-13-OT-017

Page ___ of ___

		Direct Scan		Dose Rate		Smear Counting	
Project	NFSS 2013 Investigation	Model	M12/44-9	Model	M19	Instrument A	2929
Type	Out Going	Serial#	281980/308445	Serial#	144060	Serial#	137607
		Cal Due	10-03-14	Cal Due	01-07-14	Cal Due	10-03-04
Tech	[redacted]	Bkg	35 CPM	Bkg	6 uR/Hr	Instrument B	
						Serial#	
Date	11-18-13					Cal Due	
						Tech	
						Date	

Cooler #	Units	1 Top	2 Front	3 Right	4 Left	5 Back	6 Bottom	Location	Smear #	A/B	Time	Counts* alpha	Counts* beta	Ok to Release
489	cpm	30-40	30-40	30-40	30-40	30-40	30-40	Top	1	A	1	1	56	✓
	µR/hr	6	6	6	6	6	6							
502	cpm	30-40	30-40	30-40	30-40	30-40	30-40	Front	2	A	1	4	60	✓
	µR/hr	6	8	7	7	8	8							
	cpm													
	µR/hr													
	cpm													
	µR/hr													
	cpm													
	µR/hr													
	cpm													
	µR/hr													
	cpm													
	µR/hr													
	cpm													
	µR/hr													
	cpm													
	µR/hr													
	cpm													
	µR/hr													
	cpm													
	µR/hr													

N/A

* See smear counter data sheet for dpm results

Survey ID NFSS-13-IN-018

Project NFSS 2013 Investigation	URS Survey	Direct Scan	Fixed Point
	Description Roll OFF	Meter/Probe M12 / 44-9	Meter/Probe N/A
Survey Type INCOMING		Serial# 281980 / 308445	Serial#
	○ Denotes Smear Location	Cal Due 10-03-14	Cal Due
Tech [redacted]	* Denotes Contact Readings	Bkg 30	Bkg
Date 11-18-13	All Readings in cpm unless other wise noted	Units cpm	Units

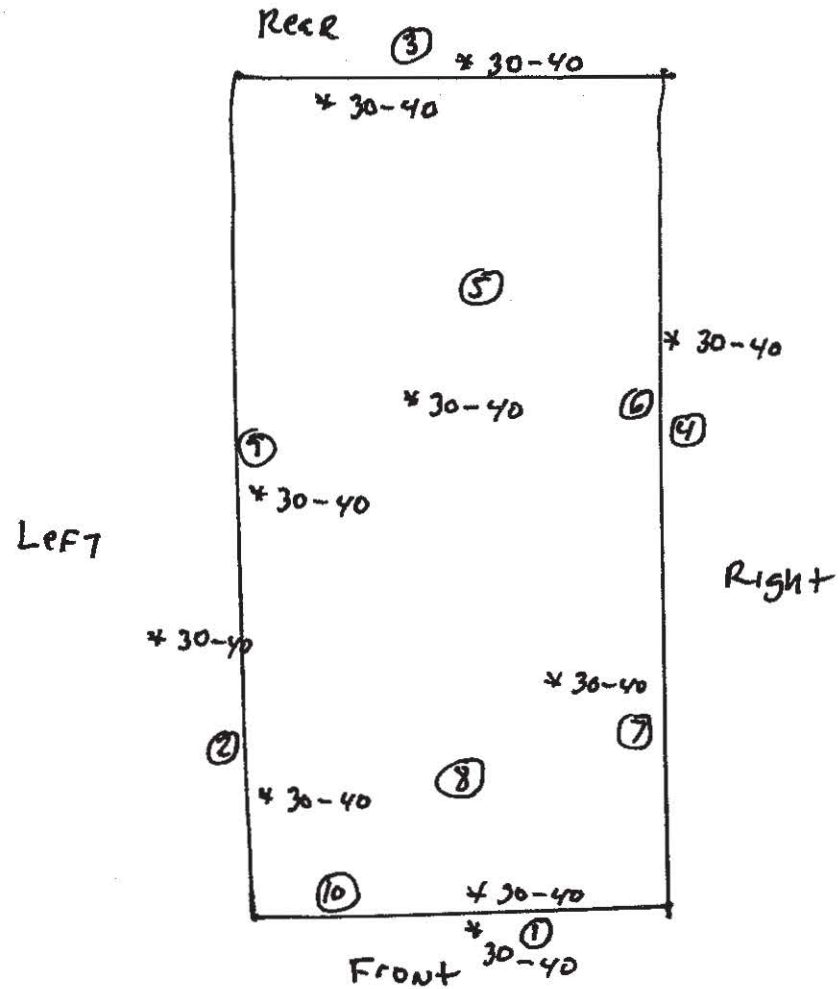

HAZMAT
RB 234
Roll OFF

Smear Results*

Smear	Location	α cts	βγ cts	Ct time	Inst
1	Front	1	92	2	A
2	Left	0	69	2	A
3	Rear	2	76	2	A
4	Right	1	87	2	A
5	Floor	0	80	2	A
6	Wall	0	80	2	A
7	Wall	1	92	2	A
8	Floor	0	79	2	A
9	Wall	0	96	2	A
10	Wall	0	92	2	A

N/A

Inst A	2929	Inst B	N/A
Serial#	137607	Serial#	
Cal Due	10/3/13	Cal Due	
Tech	[redacted]		
Date	11-18-2013		

* See smear counter data sheet for dpm results

Survey ID NFSS-13-07-019

DOT Shipping Release Form

		Direct Scan		Dose Rate		Smear Counting	
Project	NFSS 2013 Investigation	Model	M12	Model	M19	Instrument A	2929
Type	Out Going	Serial#	281980	Serial#	144060	Serial#	137607
		Cal Due	10-3-14	Cal Due	1-7-14	Cal Due	10-3-14
Tech	[redacted]	Bkg	30	Bkg	6	Instrument B	
						Serial#	N/A
Date	11-19-13					Cal Due	
						Tech	[redacted]
						Date	11-19-13

Cooler #	Units	1 Top	2 Front	3 Right	4 Left	5 Back	6 Bottom	Location	Smear #	A/B	Time	Counts* alpha	Counts* beta	#Ok to Release
480	cpm	20-40	20-40	20-40	20-40	20-40	20-40	Top	1	A	1	2	39	
	µR/hr	6	6	6	6	6	6							
501	cpm	30-50	20-40	20-40	20-40	20-40	20-40	Bottom	2	A	1	0	51	
	µR/hr	6	6	6	6	6	7							
	cpm													
	µR/hr													
	cpm													
	µR/hr													
	cpm													
	µR/hr													
	cpm						N/A							
	µR/hr													
	cpm													
	µR/hr													
	cpm													
	µR/hr													
	cpm													
	µR/hr													
	cpm													
	µR/hr													
	cpm													
	µR/hr													

* See smear counter data sheet for dpm results

Dose rates must below 500 µR/hr

#Alpha below 20 dpm/cm^2, beta below 220 dpm/cm^2

Survey ID NFSS-13-IN-020

Project	NFSS 2013 Investigation	URS Survey	
Survey Type	IN COMING	Description	Komatsu 286
Tech	[redacted]	○ Denotes Smear Location	
Date	11-19-13	* Denotes Contact Readings	
		All Readings in cpm unless other wise noted	

Direct Scan		Fixed Point	
Meter/Probe	M12 / 44-9	Meter/Probe	N/A
Serial#	281980130844 5	Serial#	
Cal Due	10-3-14	Cal Due	
Bkg	20	Bkg	
Units	CPM	Units	

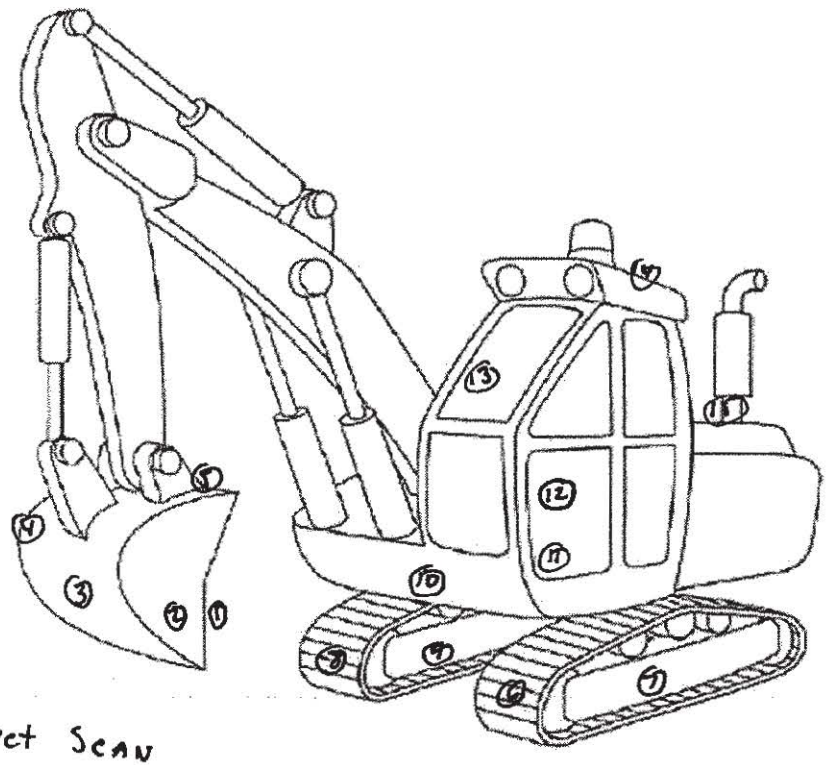

* Direct Scan of Komatsu = 30-60 cpm in all Area's

Smear Results*

Smear	Location	α cts	βγ cts	Ct time	Inst
1	Bucket	0	93	2	A
2	↓	0	103	2	A
3		0	71	2	A
4		0	85	2	A
5	Arm	0	79	2	A
6	Track	0	68	2	A
7	↓	0	76	2	A
8		1	67	2	A
9		0	92	2	A
10	Front	1	80	2	A
11	CAB	0	74	2	A
12	↓	0	85	2	A
13	Top Right	2	80	2	A
14	Top Right	2	72	2	A
15	Rear	2	77	2	A
		N/A			

Inst A	2929	Inst B	N/A
Serial#	137607	Serial#	
Cal Due	10-3-14	Cal Due	
Tech	[redacted] R		
Date	11-19-13		

* See smear counter data sheet for dpm results

Survey ID NFSS-13-IN-021

Hand Equipment/ Items Survey

Project NFSS 2013 Investigation

Survey Type INCOMING

Tech [redacted]

Date 11-19-13

Direct Scan

Meter/Probe M12/44-9

Serial# 281980/308445

Cal Due 10-3-14

Bkg 30

Units CPM

Smear Counting

Inst A 2929

Serial# 137607

Cal Due 10-3-14

Tech [redacted]

Date 11-19-13

Inst B N/A

Serial# N/A

Cal Due N/A

Item #	Description	Direct Scan low	Direct Scan high	Direct Scan avg	Smear#	A/B	Ct Time	Counts * alpha	Counts * beta	notes
S16	Cooler	20	40	30	1	A	1	2	47	
S17					2		1	8	56	
S18					3		1	4	50	
S19					4		1	1	37	
S20					5		1	6	49	
S21					6		1	1	44	
S17	Cooler	20	40	30	2	A	1	1	39	Recount

N/A

* See smear counter data sheet for dpm results

Survey ID NFSS-13-IN-022

Hand Equipment/ Items Survey

Project NFSS 2013 Investigation

Survey Type Incoming

Tech [redacted]

Date 11-20-13

Direct Scan

Meter/Probe M12/44-9

Serial# 281980/308445

Cal Due 10-3-14

Bkg 20

Units CPM

Smear Counting

Inst A 2929

Serial# 137607

Cal Due 10-3-14

Inst B 2929

Serial# 147736

Cal Due 10-28-14

Tech [redacted]

Date 11-20-13

Item #	Description	Direct Scan low	Direct Scan high	Direct Scan avg	Smear#	A/B	Ct Time	Counts * alpha	Counts * beta	notes
1	Peristalic Pump	20	40	30	1	A	2	1	90	
2	6" Roll Flat Hose	20	40	30	2	B	2	0	84	Exterior Area
3	6" Roll Flat Hose	20	40	30	3	B	2	0	86	
4	6" Ridge Suction Pipe	20	40	30	4	B	2	2	98	
5	6" Ridge Suction Pipe	20	40	30	5	B	2	1	91	
2	6" Roll Flat Hose	20	40	30	6	B	2	0	72	Interior Area
3	6" Roll Flat Hose	20	40	30	7	B	2	2	73	
4	6" Ridge Suction Pipe	20	40	30	8	B	2	0	79	
5	6" Ridge Suction Pipe	20	40	30	9	B	2	1	75	

N

A

* See smear counter data sheet for dpm results

Survey ID NFSS-13-OT-023

DOT Shipping Release Form

		Direct Scan		Dose Rate		Smear Counting	
Project	NFSS 2013 Investigation	Model	M12	Model	M19	Instrument A	2929
Type	OutGoing	Serial#	281980	Serial#	144060	Serial#	137607
[redacted]		Cal Due	10-3-14	Cal Due	1-7-14	Cal Due	10-3-14
		Bkg	30	Bkg	5	Instrument B	N/A
Date	11-20-13					Serial#	
						Cal Due	
						Tech	[redacted]
						Date	11-20-13

Cooler #	Units	1 Top	2 Front	3 Right	4 Left	5 Back	6 Bottom	Location	Smear #	A/B	Time	Counts* alpha	Counts* beta	#Ok to Release
407	cpm	20-40	20-40	20-40	20-40	20-40	20-40	Bottom	1	A	1	4	39	✓
	µR/hr	5	5	6	6	6	6							
491	cpm	20-40	20-40	20-40	20-40	20-40	20-40	Bottom	2	A	1	0	42	✓
	µR/hr	6	7	6	6	6	6							
	cpm													
	µR/hr													
	cpm													
	µR/hr													
	cpm													
	µR/hr						N/A							
	cpm													
	µR/hr													
	cpm													
	µR/hr													
	cpm													
	µR/hr													
	cpm													
	µR/hr													
	cpm													
	µR/hr													

* See smear counter data sheet for dpm results

Dose rates must below 500 µR/hr

#Alpha below 20 dpm/cm^2, beta below 220 dpm/cm^2

Survey ID NFSS-13-IN-024

Project	NFSS 2013 Investigation	URS Survey	Direct Scan	Fixed Point
		Description Pump	Meter/Probe M12/44-9	Meter/Probe M2360/43-93
Survey Type	INCOMING		Serial# 281980/308445	Serial# 276943/197430
		⬭ Denotes Smear Location	Cal Due 10-3-14	Cal Due 10-3-14
Tech	[redacted]	* Denotes Contact Readings	Bkg 20	Bkg 2/94
Date	11-20-13	All Readings in cpm unless other wise noted	Units cpm	Units cpm

* Direct Scan of pump, All Sections = 20-40 cpm

* Fixed/point Scan of Suction Line = 0 α, 101 βγ cpm
Discharge Line = 0 α, 80 βγ cpm

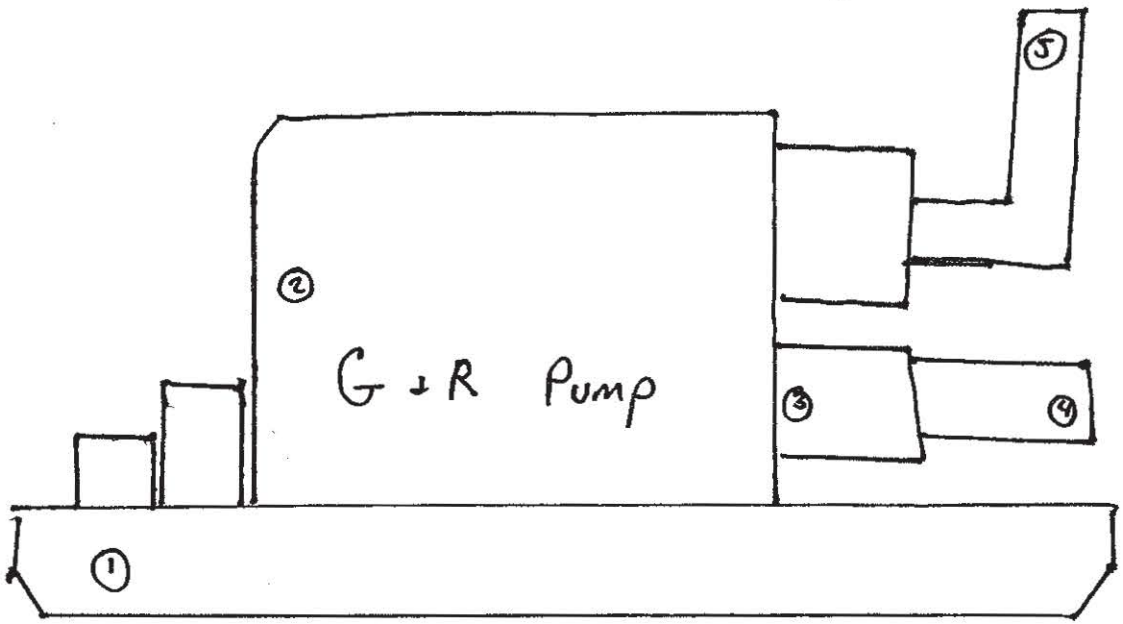

Smear Results*

Smear	Location	α cts	βγ cts	Ct time	Inst
1	STAND	0	79	2	A
2	motor	1	92	2	A
3	motor	3	90	2	A
4	Suction	0	65	2	A
5	Discharge	0	74	2	A

N/A

Inst A	2929	Inst B	N/A
Serial#	137607	Serial#	
Cal Due	10/3/14	Cal Due	
Tech	[redacted]		
Date	11-20-13		

* See smear counter data sheet for dpm results

Survey ID NFSS-13-07-025

DOT Shipping Release Form

Project	NFSS 2013 Investigation
Type	Outgoing
Tech	[redacted]
Date	11-21-13

Direct Scan	
Model	M12
Serial#	281980
Cal Due	10-3-14
Bkg	30

Dose Rate	
Model	M19
Serial#	144060
Cal Due	1-7-14
Bkg	5

Smear Counting	
Instrument A	2929
Serial#	137607
Cal Due	10-3-14
Instrument B	N/A
Serial#	
Cal Due	
Tech	[redacted]
Date	11-21-13

Cooler #	Units	1 Top	2 Front	3 Right	4 Left	5 Back	6 Bottom	Location	Smear #	A/B	Time	Counts* alpha	Counts* beta	#Ok to Release
S21	cpm	40-60	40-60	30-40	30-40	30-40	30-40	Top	1	A	1	1	55	
	µR/hr	6	6	6	6	6	7							
430	cpm	40-60	40-60	40-60	40-60	40-60	40-60	Top	2	A	1	1	42	
	µR/hr	5	6	6	5	6	6							
	cpm													
	µR/hr													
	cpm													
	µR/hr													
	cpm													
	µR/hr													
	cpm					N								
	µR/hr					A								
	cpm													
	µR/hr													
	cpm													
	µR/hr													
	cpm													
	µR/hr													
	cpm													
	µR/hr													
	cpm													
	µR/hr													

* See smear counter data sheet for dpm results

Dose rates must below 500 µR/hr

#Alpha below 20 dpm/cm^2, beta below 220 dpm/cm^2

Survey ID NFSS-13-IN-026

Hand Equipment/ Items Survey

Project NFSS 2013 Investigation

Survey Type INCOMING

Tech [redacted]

Date 11-21-13

Direct Scan

Meter/Probe M12/44-9

Serial# 281980/308445

Cal Due 10-3-14

Bkg 30

Units CPM

Smear Counting

Inst A 2929

Serial# 137607

Cal Due 10-3-14

Tech [redacted]

Date 11-21-13

Inst B 2929

Serial# 147736

Cal Due 10-28-14

Item #	Description	Direct Scan low	Direct Scan high	Direct Scan avg	Smear#	A/B	Ct Time	Counts * alpha	Counts * beta	notes
1	Red Roll Flat Hose	20	40	30	1	A	2	0	72	
2	Blue Roll Flat Hose				2			1	82	
3	Ridge Suction Hose				3			2	94	
4	GTP-50Hx Pump				4			1	85	
5	STAINER				5			0	75	
6	6" Ridge Suction Pipe				6	B		0	76	
7	6" Ridge Suction Pipe				7			3	78	
8	22' Trailer				8			2	85	
9	Extension Ladder				9			0	73	
10	24' Scaffold Plateform				10			2	85	
					N/A					

* See smear counter data sheet for dpm results

Survey ID NFSS-13-IN-027

Project	NFSS 2013 Investigation	URS Survey	Direct Scan		Fixed Point	
		Description John Deere Loader	Meter/Probe	M12/44-9	Meter/Probe	N/A
Survey Type	INCOMING		Serial#	281980 / 308445	Serial#	
Tech	[redacted]	⬭ Denotes Smear Location	Cal Due	10-3-14	Cal Due	
		* Denotes Contact Readings	Bkg	30	Bkg	
Date	11-21-13	All Readings in cpm unless other wise noted	Units	cpm	Units	

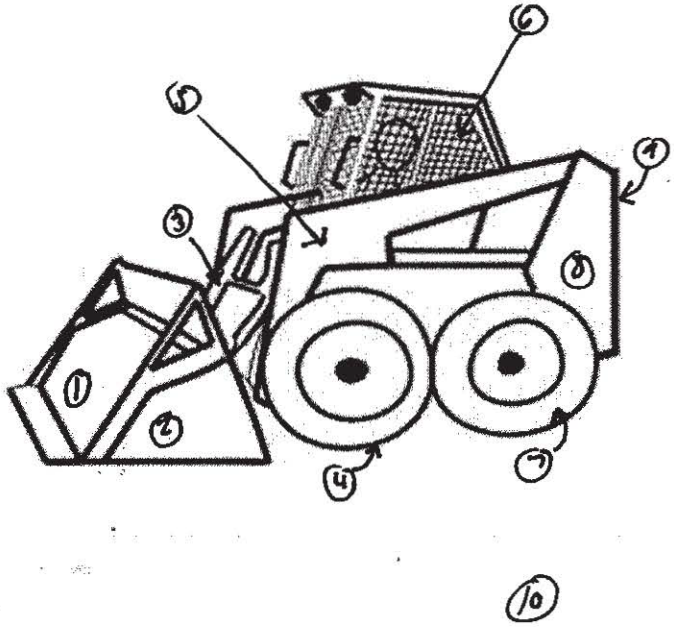

Smear Results*

Smear	Location	α cts	βγ cts	Ct time	Inst
1	Bucket	0	97	2	A
2	Bucket	0	95		
3	ARM	1	77		
4	Tire	1	91		
5	Front	0	86		
6	Cab	0	83		
7	Tire	0	69		
8	Rear	0	78		
9	Back	0	62		
10	Fork	0	78		
		N/A			

Inst A	2929	Inst B	N/A
Serial#	137607	Serial#	
Cal Due	10-3-14	Cal Due	
Tech	[redacted]		
Date	11-21-13		

* See smear counter data sheet for dpm results

Survey ID NFSS-13-EX-028

Project NFSS 2013 Investigation

URS Survey

Survey Type Spoil Piles

Tech [redacted]

Date

Description MH06

* Denotes Contact Readings

All Readings in cpm unless other wise noted

Meter/Probe	2221 / 44-10	Meter/Probe	N/A
Serial#	148443 / 150422	Serial#	
Cal Due	10-18-14	Cal Due	
Bkg	9000	Bkg	
Units	COUNTS	Units	

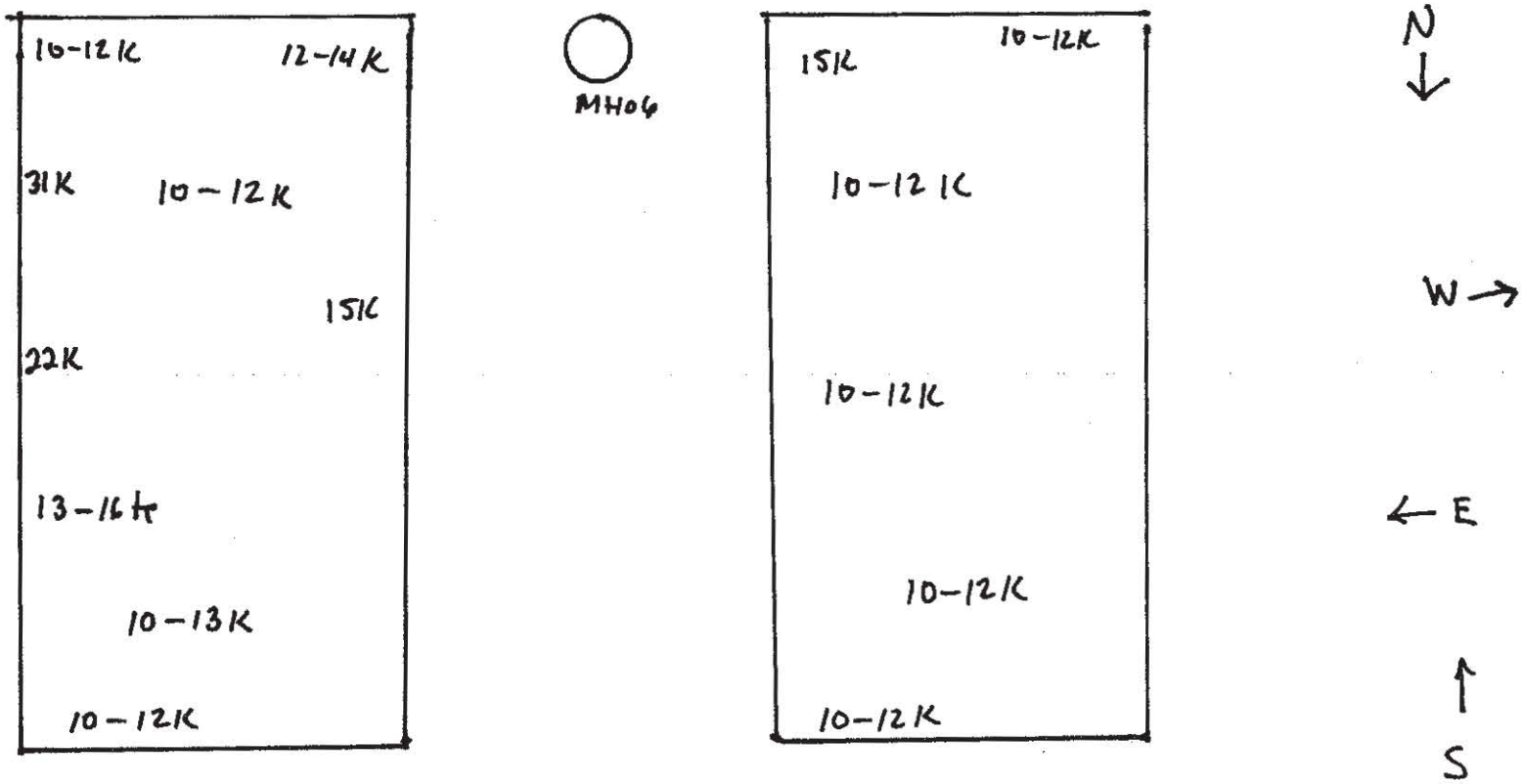

Notes

* Two Spoil piles A + B

* See smear counter data sheet for dpm results

Survey # NFSS-13-OT-029

DOT Shipping Release Form

Project	NFSS 2013 Investigation	**Direct Scan**		**Dose Rate**		**Smear Counting**	
Type	OUT GOING	Model	M3/44.9	Model	M19	Instrument A	2929
[redacted]		Serial#	51256/042280	Serial#	1441060	Serial#	137607
		Cal Due	10/11/14	Cal Due	1/7/14	Cal Due	10/03/14
		Bkg	20 cpm	Bkg	5 µR/hr	Instrument B	
Date	11/22/13					Serial#	
						Cal Due	
						Tech	
						Date	

Cooler #	Units	1 Top	2 Front	3 Right	4 Left	5 Back	6 Bottom	Location	Smear #	A/B	Time	Counts* alpha	Counts* beta	#Ok to Release
482.0	cpm	20-40	20-40	10-40	20-30	20-30	20-30	1	TOP	A	PA 21	0	43	✓
	µR/hr	5	6	5	6	5	5							
514.0	cpm	20-30	10-40	20-40	20-40	20-40	10-30	2	RIGHT	A	PA 21	0	39	✓
	µR/hr	5	5	5	5	5	5							
	cpm													
	µR/hr													
	cpm													
	µR/hr													
	cpm													
	µR/hr													
	cpm													
	µR/hr													
	cpm													
	µR/hr													
	cpm													
	µR/hr													
	cpm													
	µR/hr													
	cpm													
	µR/hr													

* See smear counter data sheet for dpm results

Dose rates must below 500 µR/hr

#Alpha below 20 dpm/cm^2, beta below 220 dpm/cm^2

Survey # NFSS-13-OT-~~030~~ 031 PM

DOT Shipping Release Form

		DOSE SCAN ~~Direct Scan~~		DIRECT SCAN ~~Dose Rate~~		~~Smear Counting~~	
Project	NFSS 2013 Investigation	Model	M19	Model	M12/44-9	Instrument A	29129
Type	OUTGOING	Serial#	144000	Serial#	102868/15129	Serial#	137607
[redacted]		Cal Due	1/7/14	Cal Due	10/11/14	Cal Due	100314
		Bkg	5 μR/HR	Bkg	20 cpm	Instrument B	
Date	11/25/13					Serial#	
						Cal Due	
						Tech	
						Date	

Cooler #	Units	1 Top	2 Front	3 Right	4 Left	5 Back	6 Bottom	Location	Smear #	A/B	Time	Counts* alpha	Counts* beta	#Ok to Release
403-O	cpm							TOP ~~403~~ PM	403	A	1	0	38	✓
	μR/hr													
463-O	cpm							TOP	463	A	1	0	44	✓
	μR/hr													
	cpm													
	μR/hr													
	cpm													
	μR/hr													
	cpm													
	μR/hr													
	cpm													
	μR/hr													
	cpm													
	μR/hr													
	cpm													
	μR/hr													
	cpm													
	μR/hr													
	cpm													
	μR/hr													
	cpm													
	μR/hr													

* See smear counter data sheet for dpm results

Dose rates must below 500 μR/hr

#Alpha below 20 dpm/cm^2, beta below 220 dpm/cm^2

Survey ID NFSS-13-IN-032

Project	NFSS 2013 Investigation	URS Survey	
Survey Type	INCOMING	Description	FRAC TANK
Tech	[redacted]	* Denotes Contact Readings	
Date	11-26-13	All Readings in cpm unless other wise noted	

Meter/Probe	2360	Meter/Probe	2929 A
Serial#	220246	Serial#	137607
Cal Due	10-3-14	Cal Due	10-3-14
Bkg	1 / 90 / 89	Bkg	0 / 1 / 34
Units	CPM	Units	COUNTS

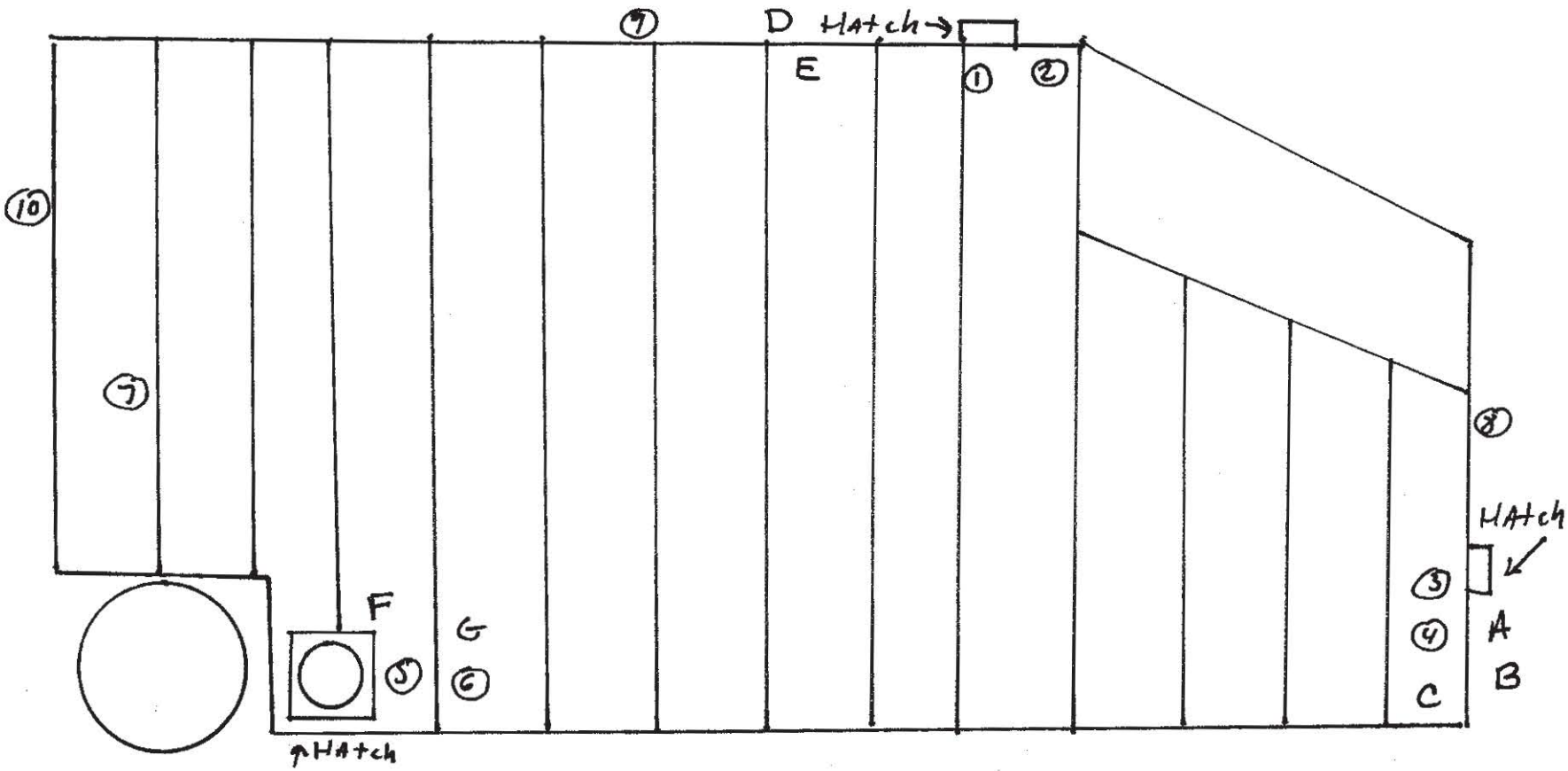

Notes A - G points are Fixed Scans

1 - 10 points are Smears

> See page 1 of 2 for Details

* See smear counter data sheet for dpm results

Survey ID NFSS-13-IN-032

Hand Equipment/ Items Survey

Project NFSS 2013 Investigation

Survey Type INCOMING

Tech [redacted]

Date 11-26-13

Fixed ~~Direct~~ Scan

Meter/Probe 2360

Serial# 220246

Cal Due 10-3-14

Bkg 1/90/89

Units CPM

Smear Counting

Inst A 2929

Serial# 137667

Cal Due 10-3-14

Tech [redacted]

Date 11-26-13

Inst B

Serial# N/A

Cal Due

Item #	Description	Fixed ~~Direct~~ Scan ~~low~~	~~high~~	~~avg~~	Smear#	A/B	Ct Time	Counts * alpha	beta	notes
1	INSIDE TANK	α	Beta	both	1	A	2	2	82	See
2					2			1	85	PAGE
3					3			3	94	2 of 2
4					4			4	88	
5					5			0	70	
6					6			1	72	
7	LEFT Side				7			2	101	
8	FRONT Side				8			0	87	
9	Right Side				9			2	89	
10	REAR Side				10			3	81	
A	VALVE FRONT	1	165	166						
B	I/S WALL	1	151	152						
C	O/S WALL	1	96	97			N/A			
D	TOP O/S	2	136	137						
E	TOP I/S	1	117	118						
F	Bottom O/S	1	168	169						
G	Bottom I/S	3	133	134						

* See smear counter data sheet for dpm results

Survey ID NFSS-13-07-~~034~~ 033 (PH)

DOT Shipping Release Form

Page ___ of ___

		Direct Scan		Dose Rate		Smear Counting	
Project	NFSS 2013 Investigation	Model	M3	Model	M19	Instrument A	2929
Type	Out Going	Serial#	S1256	Serial#	144060	Serial#	137607
Tech	[redacted]	Cal Due	10-11-14	Cal Due	1-7-14	Cal Due	10-3-14
Date	11-26-13	Bkg	30	Bkg	5	Instrument B	N/A
						Serial#	
						Cal Due	
						Tech	
						Date	

Cooler #	Units	1 Top	2 Front	3 Right	4 Left	5 Back	6 Bottom	Location	Smear #	A/B	Time	Counts* alpha	Counts* beta	#Ok to Release
485	cpm	20-40	20-40	20-40	20-40	20-40	20-40	Bottom	1	A	1	0	40	✓
	µR/hr	5	6	6	6	5	6							
	cpm													
	µR/hr													
	cpm													
	µR/hr													
	cpm													
	µR/hr													
	cpm													
	µR/hr						N/A							
	cpm													
	µR/hr													
	cpm													
	µR/hr													
	cpm													
	µR/hr													
	cpm													
	µR/hr													
	cpm													
	µR/hr													
	cpm													
	µR/hr													

* See smear counter data sheet for dpm results

Dose rates must below 500 µR/hr

#Alpha below 20 dpm/cm^2, beta below 220 dpm/cm^2