Survey ID NFSS.13-OT-~~39~~ PA 34

DOT Shipping Release Form

		Direct Scan		Dose Rate		Smear Counting	
Project	NFSS 2013 Investigation	Model	M12/44-9	Model	M19	Instrument A	2929
Type	OUTGOING	Serial#	102868/15129	Serial#	1440600	Serial#	137607
		Cal Due	10/11/14	Cal Due	1/7/14	Cal Due	100314
Tech	[redacted]	Bkg	20 cpm	Bkg	5μR/HR	Instrument B	
						Serial#	
Date	11/25/13					Cal Due	
						Tech	
						Date	

Cooler #	Units	1 Top	2 Front	3 Right	4 Left	5 Back	6 Bottom	Location	Smear #	A/B	Time	Counts* alpha	Counts* beta	#Ok to Release
488-O	cpm	20-30	20-30	20-30	20-30	20-30	20-30	TOP	488	A	1	1	55	✓
	μR/hr	5	5	5	5	5	5							
500-O	cpm	20-30	20-30	20-30	20-30	20-30	20-30	TOP	500	A	1	0	43	✓
	μR/hr	5	5	5	5	5	5							
	cpm													
	μR/hr													
	cpm													
	μR/hr													
	cpm													
	μR/hr													
	cpm													
	μR/hr													
	cpm													
	μR/hr													
	cpm													
	μR/hr													
	cpm													
	μR/hr													
	cpm													
	μR/hr													
	cpm													
	μR/hr													

[redacted]

* See smear counter data sheet for dpm results

Dose rates must below 500 μR/hr

#Alpha below 20 dpm/cm^2, beta below 220 dpm/cm^2

Survey ID NFSS-13-OT-~~034~~ 035 Pia

DOT Shipping Release Form

		Direct Scan		Dose Rate		Smear Counting	
Project	NFSS 2013 Investigation	Model	M12/414-9	Model	M119	Instrument A	2929
Type	OUTGOING	Serial#	102868/151291	Serial#	144009	Serial#	137607
[redacted]		Cal Due	10/11/14	Cal Due	1/7/14	Cal Due	100314
		Bkg	19 CPM	Bkg	5uR/HR	Instrument B	
Date	11/27/13					Serial#	
						Cal Due	
						Tech	
						Date	

Cooler #	Units	1 Top	2 Front	3 Right	4 Left	5 Back	6 Bottom	Location	Smear #	A/B	Time	Counts* alpha	Counts* beta	#Ok to Release
405.0	cpm	20-30	20-30	20-30	20-30	20-30	20-40	TOP	405	A	1	1	40	✓
	µR/hr	5	5	5	6	5	5							
513.0	cpm	20-40	20-30	20-30	20-30	20-30	20-30	FRONT	513	A	1	1	49	✓
	µR/hr	5	7	5	5	6	5							
462-0	cpm	20-30	20-40	20-40	20-40	20-30	20-30	TOP	462	A	1	0	42	✓
	µR/hr	5	6	6	5	5	5							
	cpm													
	µR/hr													
	cpm													
	µR/hr													
	cpm													
	µR/hr													
	cpm													
	µR/hr													
	cpm													
	µR/hr													
	cpm													
	µR/hr													
	cpm													
	µR/hr													
	cpm													
	µR/hr													

[redacted]

* See smear counter data sheet for dpm results

Dose rates must below 500 µR/hr

#Alpha below 20 dpm/cm^2, beta below 220 dpm/cm^2

Survey ID NFSS-13-R7-036

Project NFSS 2013 Investigation	URS Survey	Direct Scan	Fixed Point
Survey Type Routine	Description Waste Accumulation	Meter/Probe M19	Meter/Probe
Tech [redacted]	○ Denotes Smear Location	Serial# 144060	Serial#
Date 11-27-13	* Denotes Contact Readings	Cal Due 1-7-14	Cal Due
	All Readings in cpm unless other wise noted	Bkg 5	Bkg
		Units uR/hr	Units

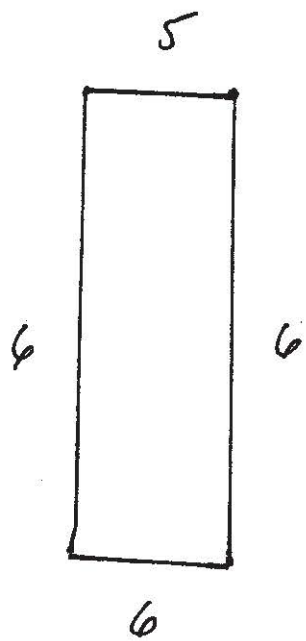

Roll off

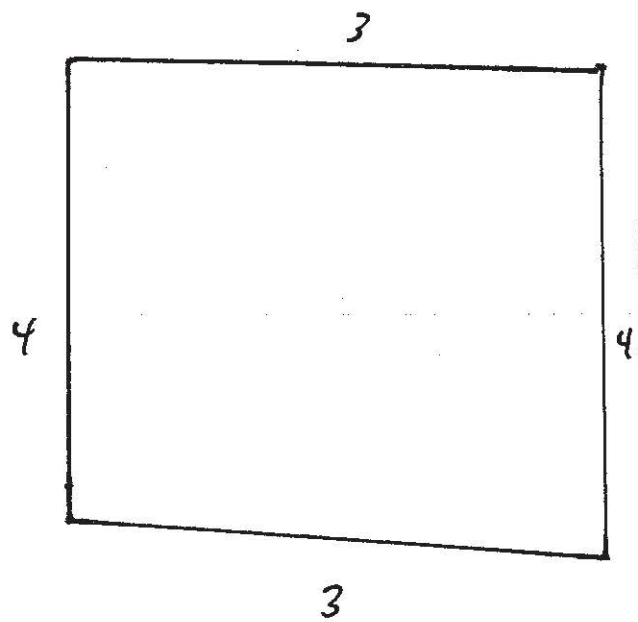

Frac Tank

* Units are in uR/hr

Smear Results*

Smear	Location	α cts	βγ cts	Ct time	Inst

N/A

Inst A		Inst B	
Serial#		Serial#	
Cal Due		Cal Due	
Tech			
Date			

N/A

* See smear counter data sheet for dpm results

Survey ID NFSS-13-07-037

DOT Shipping Release Form

		Direct Scan		Dose Rate		Smear Counting	
Project	NFSS 2013 Investigation	Model	M12	Model	M19	Instrument A	2929
Type	Out Going	Serial#	281980	Serial#	144060	Serial#	137607
		Cal Due	10-3-14	Cal Due	1-7-14	Cal Due	10-3-14
Tech	[redacted]	Bkg	30	Bkg	5	Instrument B	
						Serial#	N/A
Date	12-2-13					Cal Due	
						Tech	[redacted]
						Date	12-2-13

Cooler #	Units	1 Top	2 Front	3 Right	4 Left	5 Back	6 Bottom	Location	Smear #	A/B	Time	Counts* alpha	Counts* beta	#Ok to Release
S20	cpm	30-50	30-50	30-50	30-50	30-50	30-50	Top	1	A	1	1	45	OK
	µR/hr	5	6	6	6	6	6							
S12	cpm	30-50	30-50	30-50	30-50	30-50	30-50	Bottom	2	A	1	0	32	OK
	µR/hr	7	6	7	6	6	6							
	cpm													
	µR/hr													
	cpm													
	µR/hr													
	cpm													
	µR/hr													
	cpm													
	µR/hr													
	cpm													
	µR/hr													
	cpm													
	µR/hr													
	cpm													
	µR/hr													
	cpm													
	µR/hr													

N/A

* See smear counter data sheet for dpm results

Dose rates must below 500 µR/hr

#Alpha below 20 dpm/cm^2, beta below 220 dpm/cm^2

Survey ID NFSS-13-07-039

DOT Shipping Release Form

		Direct Scan		Dose Rate		Smear Counting	
Project	NFSS 2013 Investigation	Model	M3	Model	M19	Instrument A	2929
Type	Out Going	Serial#	S1259	Serial#	144060	Serial#	137607
Tech	[redacted]	Cal Due	10-11-14	Cal Due	1-7-14	Cal Due	10-3-14
Date	12-3-13	Bkg	30	Bkg	4	Instrument B	
						Serial#	N/A
						Cal Due	
						Tech	[redacted]
						Date	12-3-13

Cooler #	Units	1 Top	2 Front	3 Right	4 Left	5 Back	6 Bottom	Location	Smear #	A/B	Time	Counts* alpha	Counts* beta	#Ok to Release
S22	cpm	30-50	30-50	30-50	30-50	30-50	30-50	Bottom	1	A	1	0	47	OK
	µR/hr	5	5	5	5	5	6							
S08	cpm	30-50	30-50	30-50	30-50	30-50	30-50	↓	2	↓	↓	0	33	↓
	µR/hr	5	5	5	5	5	5							
S18	cpm	30-50	30-50	30-50	30-50	30-50	30-50	↓	3	↓	↓	0	48	↓
	µR/hr	5	5	5	5	5	5							
	cpm													
	µR/hr													
	cpm													
	µR/hr													
	cpm						N							
	µR/hr													
	cpm						A							
	µR/hr													
	cpm													
	µR/hr													
	cpm													
	µR/hr													
	cpm													
	µR/hr													
	cpm													
	µR/hr													

* See smear counter data sheet for dpm results

Dose rates must below 500 µR/hr

#Alpha below 20 dpm/cm^2, beta below 220 dpm/cm^2

Survey ID NFSS-13-OT-041

DOT Shipping Release Form

Page 1 of ___

		Direct Scan		Dose Rate		Smear Counting	
Project	NFSS 2013 Investigation	Model	M12	Model	M19	Instrument A	2929
Type	Out Going	Serial#	281980	Serial#	144060	Serial#	137607
		Cal Due	10-3-14	Cal Due	1-7-14	Cal Due	10-3-14
Tech	[redacted]	Bkg	30	Bkg	5	Instrument B	
						Serial#	N/A
Date	12-4-13					Cal Due	
						Tech	[redacted]
						Date	12-4-13

Cooler #	Units	1 Top	2 Front	3 Right	4 Left	5 Back	6 Bottom	Location	Smear #	A/B	Time	Counts* alpha	Counts* beta	#Ok to Release
462	cpm	30-50	30-50	30-50	30-50	30-50	30-50	Top	1	A	1	0	26	OK
	µR/hr	6	5	6	6	6	6							
516	cpm	30-50	30-50	30-50	30-50	30-50	30-50	↓	2	↓	1	0	32	OK
	µR/hr	6	6	6	6	6	6							
517	cpm	30-50	30-50	30-50	30-50	30-50	30-50	↓	3	↓	1	0	40	OK
	µR/hr	7	7	7	7	7	7							
	cpm													
	µR/hr													
	cpm													
	µR/hr													
	cpm													
	µR/hr													
	cpm						N							
	µR/hr													
	cpm						A							
	µR/hr													
	cpm													
	µR/hr													
	cpm													
	µR/hr													
	cpm													
	µR/hr													

* See smear counter data sheet for dpm results

Dose rates must below 500 µR/hr

#Alpha below 20 dpm/cm^2, beta below 220 dpm/cm^2

Survey ID NFSS-13-07-043

DOT Shipping Release Form

		Direct Scan		Dose Rate		Smear Counting	
Project	NFSS 2013 Investigation	Model	M12	Model	M19	Instrument A	2929
Type	Out Going	Serial#	281980	Serial#	144060	Serial#	137607
Tech	[redacted]	Cal Due	10-3-14	Cal Due	1-7-14	Cal Due	10-3-14
Date	12-5-13	Bkg	40	Bkg	5	Instrument B	N/A
						Serial#	
						Cal Due	
						Tech	[redacted]
						Date	12-5-13

Cooler #	Units	1 Top	2 Front	3 Right	4 Left	5 Back	6 Bottom	Location	Smear #	A/B	Time	Counts* alpha	Counts* beta	#Ok to Release
472	cpm	40-60	40-60	40-60	40-60	40-60	40-60	Top	1	A	1	0	38	
	µR/hr	5	5	5	5	5	5							
409	cpm	40-60	40-60	40-60	40-60	40-60	40-60	Top	2		1	0	41	
	µR/hr	6	6	6	6	6	6							
477	cpm	40-60	40-60	40-60	40-60	40-60	40-60	Top	3		1	0	34	
	µR/hr	6	6	6	6	6	6							
	cpm													
	µR/hr													
	cpm													
	µR/hr													
	cpm													
	µR/hr													
	cpm					N								
	µR/hr					A								
	cpm													
	µR/hr													
	cpm													
	µR/hr													
	cpm													
	µR/hr													
	cpm													
	µR/hr													

* See smear counter data sheet for dpm results

Dose rates must below 500 µR/hr

#Alpha below 20 dpm/cm^2, beta below 220 dpm/cm^2

Survey ID NFSS-13-Ex-044

Page ___ of ___

Project NFSS 2013 Investigation	URS Survey				
Survey Type Excavation	Description Spoils	Meter/Probe	2221	44-10	Meter/Probe
[redacted]	* Denotes Contact Readings	Serial#	148443	150422	Serial#
	All Readings in cpm unless other wise noted	Cal Due	10-18-14		Cal Due N/A
Date 12-5-13		Bkg	15000		Bkg
		Units	Counts		Units

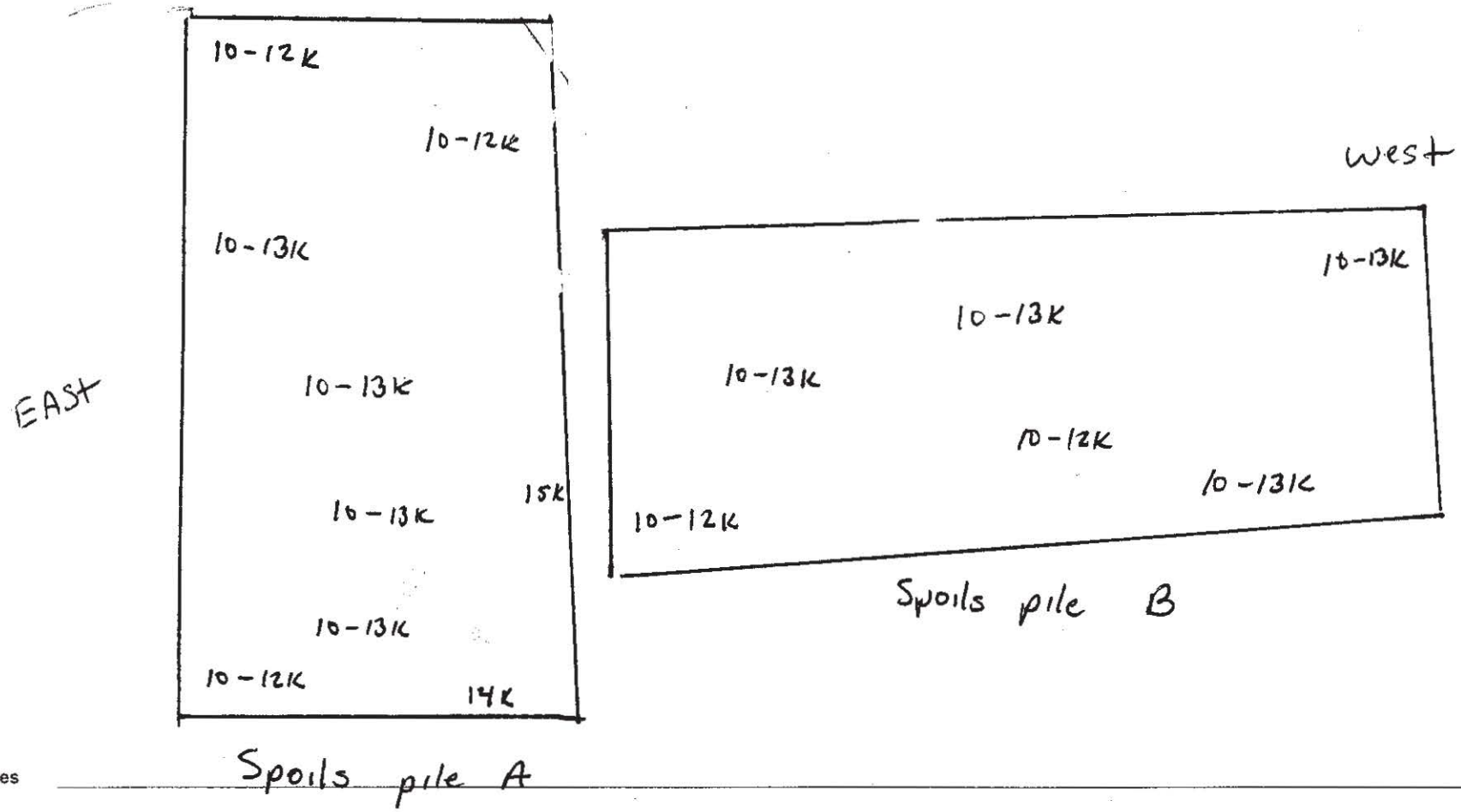

Notes

* See smear counter data sheet for dpm results

Survey ID NFSS-13-IN-045

Hand Equipment/ Items Survey

Project NFSS 2013 Investigation

Survey Type INCOMING

Tech [redacted]

Date 12-5-13

Direct Scan

Meter/Probe M12 | 44-9

Serial# 281980 | 308445

Cal Due 10-3-14

Bkg 40

Units CPM

Smear Counting

Inst A 2929

Serial# 137607

Cal Due 10-3-14

Tech [redacted]

Date 12-5-13

Inst B N/A

Serial#

Cal Due

Item #	Description	Direct Scan low	Direct Scan high	Direct Scan avg	Smear#	A/B	Ct Time	Counts * alpha	Counts * beta	notes
S23	Cooler	40	60	50	1	A	2	0	63	OK
S24					2	A	2	0	84	
S25					3	A	2	1	92	
S26					4	A	2	0	78	
S27					5	A	2	0	92	
S28					6	A	2	0	89	
S29					7	A	2	0	78	
S30					8	A	2	0	92	
S31					9	A	2	0	78	
S32					10	A	2	0	89	

N/A

* See smear counter data sheet for dpm results

Survey ID NFSS-13-07-046

DOT Shipping Release Form

		Direct Scan		Dose Rate		Smear Counting	
Project	NFSS 2013 Investigation	Model	M12	Model	M19	Instrument A	2929
Type	Out Going	Serial#	281980	Serial#	144060	Serial#	137607
Tech	[redacted]	Cal Due	10-3-14	Cal Due	1-7-14	Cal Due	10-3-14
		Bkg	40	Bkg	5	Instrument B	
						Serial#	N/A
Date	12-6-13					Cal Due	
						Tech	[redacted]
						Date	12-6-13

Cooler #	Units	1 Top	2 Front	3 Right	4 Left	5 Back	6 Bottom	Location	Smear #	A/B	Time	Counts* alpha	Counts* beta	#Ok to Release
S09	cpm	40-60	40-60	40-60	40-60	40-60	40-60	Top	1	A	1	0	49	Yes
	µR/hr	6	6	6	6	6	6							
S10	cpm	40-60	40-60	40-60	40-60	40-60	40-60	Top	2	A	1	1	42	↓
	µR/hr	5	5	5	5	5	5							
S19	cpm	40-60	40-60	40-60	40-60	40-60	40-60	Top	3	A	1	0	40	
	µR/hr	6	6	6	6	6	6							
	cpm													
	µR/hr													
	cpm													
	µR/hr													
	cpm													
	µR/hr						N/A							
	cpm													
	µR/hr													
	cpm													
	µR/hr													
	cpm													
	µR/hr													
	cpm													
	µR/hr													
	cpm													
	µR/hr													

* See smear counter data sheet for dpm results

Dose rates must below 500 µR/hr

#Alpha below 20 dpm/cm^2, beta below 220 dpm/cm^2

Survey ID NFSS-13-07-047

Project NFSS 2013 Investigation	URS Survey	Direct Scan	Fixed Point
Survey Type Out Going	Description G&R Pump	Meter/Probe M12 / 44-9	Meter/Probe
Tech [redacted]	○ Denotes Smear Location	Serial# 281980 / 308445	Serial#
Date 12-6-13	* Denotes Contact Readings	Cal Due 10-3-14	Cal Due N/A
	All Readings in cpm unless other wise noted	Bkg 40	Bkg
		Units CPM	Units

Direct	Scan	
Low	High	Avg
40	60	50

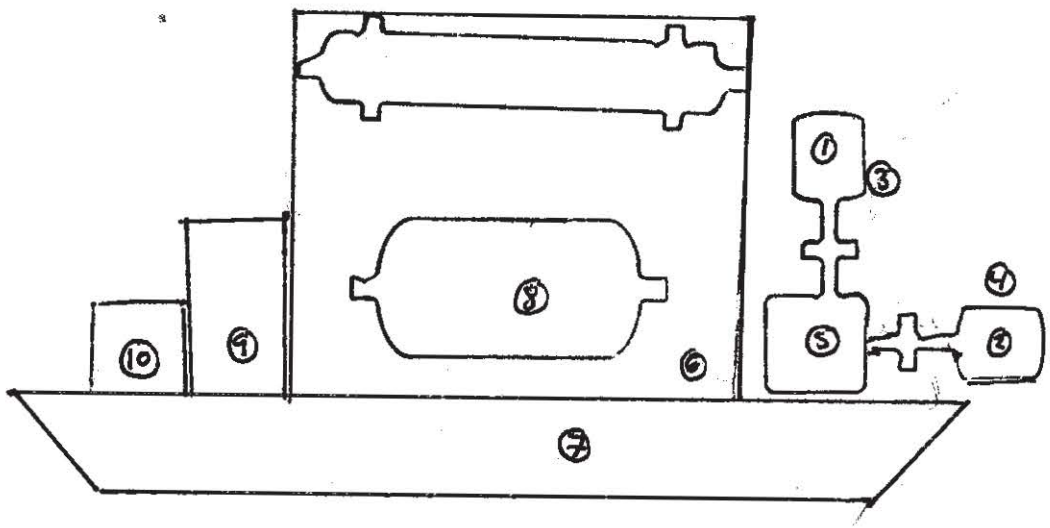

G & R Pump

Smear Results*

Smear	Location	α cts	βγ cts	Ct time	Inst
1	I/S	0	82	2	A
2	O/S	1	94	2	A
3	I/S	1	70	2	A
4	O/S	1	77	2	A
5	O/S	2	78	2	A
6	O/S	1	64	2	A
7	O/S	1	85	2	A
8	O/S	1	79	2	A
9	O/S	1	88	2	A
10	O/S	1	90	2	A

N/A

Inst A	2929	Inst B	
Serial#	137609	Serial#	
Cal Due	10/3/14	Cal Due	N/A
Tech	[redacted]		
Date	12-6-13		

* See smear counter data sheet for dpm results

Survey ID NFSS-13-OT-048

Project	NFSS 2013 Investigation	URS Survey	Direct Scan		Fixed Point	
		Description TRAILER	Meter/Probe	M12 | 44-9	Meter/Probe	N/A
Survey Type	Out Going		Serial#	281980 | 308445	Serial#	
		○ Denotes Smear Location	Cal Due	10-3-14	Cal Due	
Tech	[redacted]	* Denotes Contact Readings	Bkg	40	Bkg	
Date	12-6-13	All Readings in cpm unless other wise noted	Units	cpm	Units	

Direct Scan		
Low	High	Avg
40	60	50

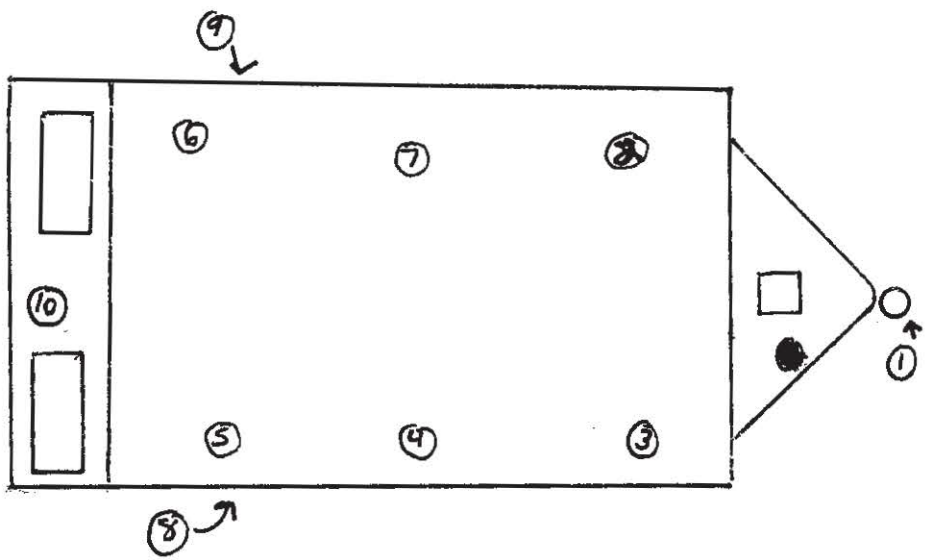

Smear Results*

Smear	Location	α cts	βγ cts	Ct time	Inst
1	RING	2	76	2	B
2	FRONT	1	74	2	B
3	BED	0	82	2	B
4		1	79	2	B
5		2	89	2	B
6		0	88	2	B
7		2	79	2	B
8	TIRE	3	88	2	B
9	TIRE	0	76	2	B
10	REAR	2	71	2	B

N/A

Inst A	N/A	Inst B	2929
Serial#		Serial#	147736
Cal Due		Cal Due	10-28-14
[redacted]			
Date	12-6-13		

* See smear counter data sheet for dpm results

Survey ID NFSS-13-07-049

Hand Equipment/ Items Survey

Project	NFSS 2013 Investigation	*Direct Scan*		*Smear Counting*	
		Meter/Probe	M12 / 44-9	Inst A	2929
Survey Type	Outgoing	Serial#	281980 / 308445	Serial#	137607
		Cal Due	10-3-14	Cal Due	10-3-14
Tech	[redacted]	Bkg	40	Tech	[redacted]
Date	12-6-13	Units	cpm	Date	12-6-13

Inst B / Serial# / Cal Due: N/A

Item #	Description	Direct Scan low	Direct Scan high	Direct Scan avg	Smear#	A/B	Ct Time	Counts * alpha	Counts * beta	notes
1	6" Roll Flat Hose Red	40	60	50	1	A	2	0	77	I/S Inside
	↓				2			0	66	O/S Outside
2	6" Rigid Pipe Black				3			1	66	I/S
	↓				4			1	73	O/S
3	6" Rigid Pipe Green				5			1	77	I/S
					6			0	73	O/S
4	6" Roll Flat Hose Red				7			0	80	I/S
	↓				8			2	84	O/S
5	6" Rigid Pipe Black				9			0	85	I/S
	↓				10			0	75	O/S
6	6" Rigid Pipe Green				11			0	67	I/S
	↓	↓	↓	↓	12	↓	↓	0	79	O/S

N/A

* See smear counter data sheet for dpm results

Survey ID NFSS-13-07-051

Page ___ of ___

Project NFSS 2013 Investigation	URS Survey	Direct Scan	Fixed Point
	Description Komatsu 286	Meter/Probe M12 | 44-9	Meter/Probe M 2360
Survey Type Outgoing		Serial# 281980 | 308445	Serial# 276943
[redacted]	○ Denotes Smear Location	Cal Due 10-3-14	Cal Due 10-3-14
	* Denotes Contact Readings	Bkg 40	Bkg 128
Date 12-10-13	All Readings in cpm unless other wise noted	Units cpm	Units cpm

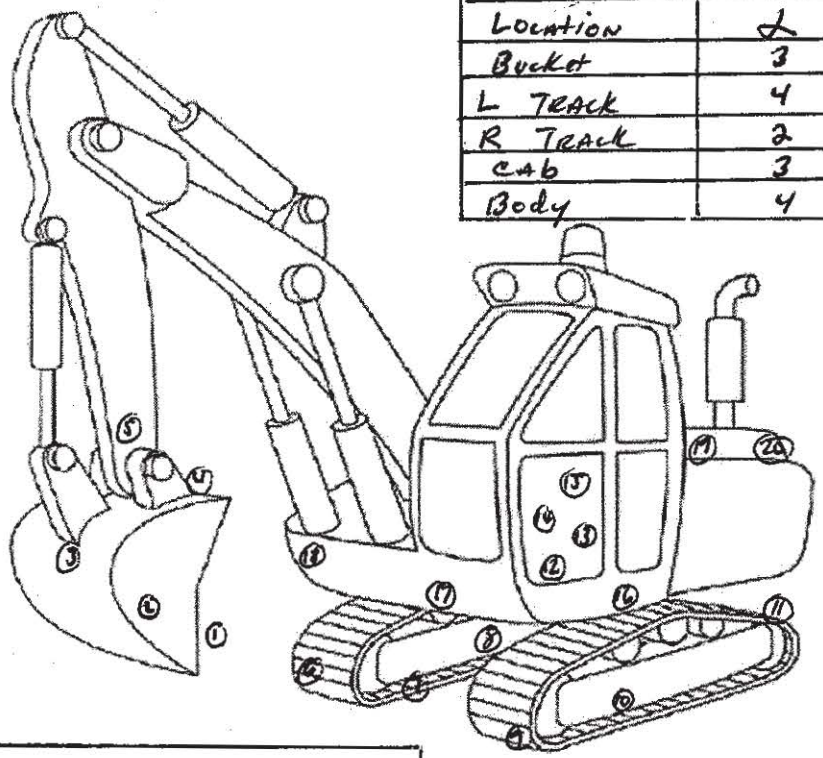

Fixed point Scan		
Location	A	B
Bucket	3	77
L Track	4	80
R Track	2	104
Cab	3	140
Body	4	136

Direct Scan		
Low	High	Ave
40	60	50

Smear Results*

Smear	Location	α cts	βγ cts	Ct time	Inst
1	Bucket	3	82	2	A
2		1	80	2	
3		2	77	2	
4		1	76	2	
5	Arm	2	84	2	
6	Track	0	81	2	
7		2	91	2	
8		1	93	2	
9		0	75	2	
10		1	72	2	
11		0	93	2	B
12	Cab	2	83	2	
13		0	83	2	
14		0	77	2	
15		0	81	2	
16	Body	3	78	2	
17		3	82	2	
18		1	98	2	
19		1	87	2	
20		3	77	2	

Inst A	2929	Inst B	2929
Serial#	137607	Serial#	147736
Cal Due	10-3-14	Cal Due	10-28-14
Tech	[redacted]		
Date	12-10-13		

* See smear counter data sheet for dpm results

Survey ID NFSS-13-OT-050

DOT Shipping Release Form

Page 1 of ___

		Direct Scan		Dose Rate		Smear Counting	
Project	NFSS 2013 Investigation	Model	M12	Model	M19	Instrument A	2929
Type	Outgoing	Serial#	281980	Serial#	144060	Serial#	137607
		Cal Due	10-3-14	Cal Due	1-7-14	Cal Due	10-3-14
Tech	[redacted]	Bkg	40	Bkg	5	Instrument B	
						Serial#	N/A
Date	12-9-13					Cal Due	
						Tech	[redacted]
						Date	12-9-13

Cooler #	Units	1 Top	2 Front	3 Right	4 Left	5 Back	6 Bottom	Location	Smear #	A/B	Time	Counts* alpha	Counts* beta	#Ok to Release
S23	cpm	40-60	40-60	40-60	40-60	40-60	40-60	Top	S23	A	1	0	53	OK
	µR/hr	5	5	5	5	5	5							
	cpm													
	µR/hr													
	cpm													
	µR/hr													
	cpm													
	µR/hr													
	cpm													
	µR/hr													
	cpm													
	µR/hr													
	cpm													
	µR/hr													
	cpm													
	µR/hr													
	cpm													
	µR/hr													
	cpm													
	µR/hr													
	cpm													
	µR/hr													

N/A

* See smear counter data sheet for dpm results

Dose rates must below 500 µR/hr

#Alpha below 20 dpm/cm^2, beta below 220 dpm/cm^2

Survey ID NFSS-13-OT-052

DOT Shipping Release Form

Page 1 of ___

		Direct Scan		Dose Rate		Smear Counting	
Project	NFSS 2013 Investigation	Model	M12	Model	M19	Instrument A	2929
Type	Out Going	Serial#	281980	Serial#	144060	Serial#	137607
		Cal Due	10-3-14	Cal Due	1-7-14	Cal Due	10-3-14
Tech	[redacted]	Bkg	40	Bkg	5	Instrument B	
						Serial#	N/A
Date	12-10-13					Cal Due	
						Tech	[redacted]
						Date	12-10-13

Cooler #	Units	1 Top	2 Front	3 Right	4 Left	5 Back	6 Bottom	Location	Smear #	A/B	Time	Counts* alpha	Counts* beta	#Ok to Release
526	cpm	30-50	30-50	30-50	30-50	30-50	30-50	Top	526	A	1	0	32	OK
	µR/hr	5	5	5	5	5	5							
531	cpm	30-50	30-50	30-50	30-50	30-50	30-50	Top	531	A	1	0	49	OK
	µR/hr	5	5	5	6	6	6							
	cpm													
	µR/hr													
	cpm													
	µR/hr													
	cpm													
	µR/hr													
	cpm													
	µR/hr													
	cpm													
	µR/hr													
	cpm													
	µR/hr													
	cpm													
	µR/hr													
	cpm													
	µR/hr													
	cpm													
	µR/hr													

N/A

* See smear counter data sheet for dpm results

Dose rates must below 500 µR/hr

#Alpha below 20 dpm/cm^2, beta below 220 dpm/cm^2

Survey ID NFSS-13-07-053

Hand Equipment/ Items Survey

Project NFSS 2013 Investigation

Survey Type Out Going

Tech [redacted]

Date 12-10-13

Direct Scan

Meter/Probe M12 | 44-9

Serial# 281980 | 308445

Cal Due 10-3-14

Bkg 40

Units cpm

Smear Counting

Inst A 2929

Serial# 137607

Cal Due 10-3-14

Tech [redacted]

Date 12-10-13

Inst B 2929

Serial# 147736

Cal Due 10-28-14

Item #	Description	Direct Scan low	Direct Scan high	Direct Scan avg	Smear#	A/B	Ct Time	Counts * alpha	Counts * beta	notes
1	24" Bucket	30	60	50	1	A	2	1	81	Interior Side
	24" Bucket	30	60	50	2	A	2	0	84	Exterior Side
2	48" Bucket	30	60	50	3	A	2	3	75	Interior Side
	48" Bucket	30	60	50	4	A	2	0	80	Exterior Side
3	24 ft Scaffold Pick	30	60	50	5			0	81	
					6			0	78	
					7			0	72	
					8			0	64	
					9			0	93	
					10			0	87	
4	Crowbar	30	60	50	11	B	2	0	84	N/A
5	Crowbar				12			0	66	
6	Shovel				13			1	78	
7	Shovel				14			0	86	
8	Crowbar				15			0	94	
9	Shovel				16			2	74	
10	Shovel				17			2	81	
11	Shovel				18			0	77	
12	Sledge Hammer				19			0	76	

* See smear counter data sheet for dpm results

Survey ID NFSS-13-07-053

Hand Equipment/ Items Survey

Project NFSS 2013 Investigation

Survey Type Outgoing

Tech [redacted]

Date 12-10-13

Direct Scan

Meter/Probe

Serial#

Cal Due

Bkg N/A

Units

Smear Counting

Inst A

Serial#

Cal Due N/A

Tech

Date

Inst B

Serial#

Cal Due N/A

Item #	Description	Direct Scan low	Direct Scan high	Direct Scan avg	Smear#	A/B	Ct Time	Counts * alpha	Counts * beta	notes
13	Extension ladder	30	60	50	20	A	2	2	82	
	↓	↓	↓	↓	21	↓	↓	1	83	
14	Pump	↓	↓	↓	22	B	↓	6	77	
	↓	↓	↓	↓	23	↓	↓	0	70	
15	Pump	30	60	50	24	A	2	0	91	
16	Blue Roll Flat Hose	↓	↓	↓	25	↓	↓	1	81	
17	Blue Roll Flat Hose				26			0	83	
18	Red Roll Flat Hose				27			1	78	
19	Black 2" Flex Hose				28			2	87	
20	Blue 2" Flex Hose				29			2	100	N/A
21	Green 2" Flex Hose				30			4	85	
22	Black 2" Flex Hose				31			1	87	
23	Black 2" Flex Hose	↓	↓	↓	32	↓	↓	2	82	

N/A

* See smear counter data sheet for dpm results

Survey ID NFSS-13-07-054

Project	NFSS 2013 Investigation	URS Survey	Direct Scan		Fixed Point
		Description John Deere Loader	Meter/Probe	M12 | 44-9	Meter/Probe
Survey Type	Out Going		Serial#	281980 | 308445	Serial#
		○ Denotes Smear Location	Cal Due	10-3-14	Cal Due
Tech	[redacted]	* Denotes Contact Readings	Bkg	40	Bkg
Date	[redacted]	All Readings in cpm unless other wise noted	Units	CPM	Units

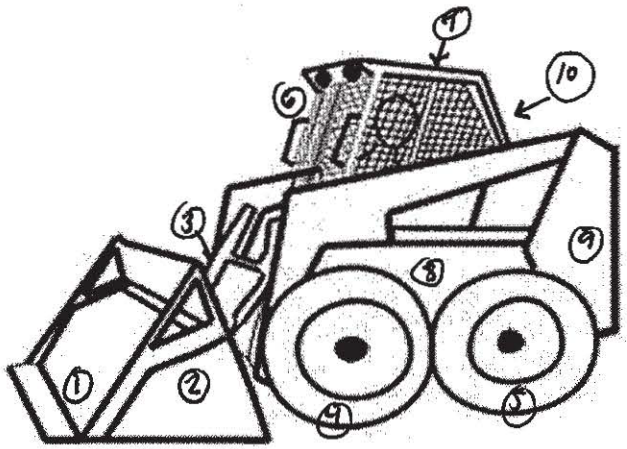

Smear Results*

Smear	Location	α cts	βγ cts	Ct time	Inst
1	Fork	0	78	2	A
2	Fork	1	78	2	A
3	Arm	1	96	2	A
4	L Tire	2	74	2	A
5	R Tire	1	82	2	A
6	Cab	0	99	2	A
7	Cab	2	89	2	A
8	Body	1	73	2	A
9	Body	2	79	2	A
10	Body	0	95	2	A

N/A

Direct Scan		
Low	High	Avg
30	60	50

Inst A	2929	Inst B	
Serial#	137607	Serial#	N/A
Cal Due	10-3-14	Cal Due	
Tech	[redacted]		
Date			

* See smear counter data sheet for dpm results

Survey ID NFSS-13-07-OSS

DOT Shipping Release Form

		Direct Scan		Dose Rate		Smear Counting	
Project	NFSS 2013 Investigation	Model	M12	Model	M19	Instrument A	2929
Type	Out Going	Serial#	281980	Serial#	144060	Serial#	137607
Tech	[redacted]	Cal Due	10-3-14	Cal Due	1-7-14	Cal Due	10-3-14
Date	12-11-13	Bkg	40	Bkg	5	Instrument B	
						Serial#	N/A
						Cal Due	
						Tech	[redacted]
						Date	12-11-13

Cooler #	Units	1 Top	2 Front	3 Right	4 Left	5 Back	6 Bottom	Location	Smear #	A/B	Time	Counts* alpha	Counts* beta	#Ok to Release
S29	cpm	30-60	30-60	30-60	30-60	30-60	30-60	Bottom	S29	A	1	0	35	
	µR/hr	6	6	6	6	6	6							
S30	cpm	30-60	30-60	30-60	30-60	30-60	30-60	Bottom	S30	A	1	0	43	
	µR/hr	6	6	6	6	6	6							
	cpm													
	µR/hr													
	cpm													
	µR/hr													
	cpm													
	µR/hr						N							
	cpm													
	µR/hr						A							
	cpm													
	µR/hr													
	cpm													
	µR/hr													
	cpm													
	µR/hr													
	cpm													
	µR/hr													
	cpm													
	µR/hr													

* See smear counter data sheet for dpm results

Dose rates must below 500 µR/hr

#Alpha below 20 dpm/cm^2, beta below 220 dpm/cm^2

Survey ID NFSS-13-OT-056

DOT Shipping Release Form

Page 1 of ___

		Direct Scan		Dose Rate		Smear Counting	
Project	NFSS 2013 Investigation	Model	M12	Model	M19	Instrument A	2929
Type	OUTGOING	Serial#	281910	Serial#	244060	Serial#	137607
Tech	[redacted]	Cal Due	100314	Cal Due	1/7/14	Cal Due	101314
Date	121213	Bkg	20 CPM	Bkg	5 µR/HR	Instrument B	
						Serial#	
						Cal Due	
						Tech	
						Date	

Cooler #	Units	1 Top	2 Front	3 Right	4 Left	5 Back	6 Bottom	Location	Smear #	A/B	Time	Counts* alpha	Counts* beta	#Ok to Release
525	cpm	20-30	20-30	20-30	20-30	20-40	20-30	TOP	525	A	1	0	42	✓
	µR/hr	5	6	5	5	6	5							
528	cpm	20-40	20-30	20-30	20-30	20-40	20-40	BOTTOM	528	A	1	0	46	✓
	µR/hr	6	5	6	6	5	5							
	cpm													
	µR/hr													
	cpm													
	µR/hr													
	cpm													
	µR/hr													
	cpm						A							
	µR/hr													
	cpm													
	µR/hr													
	cpm													
	µR/hr													
	cpm													
	µR/hr													
	cpm													
	µR/hr													
	cpm													
	µR/hr													

* See smear counter data sheet for dpm results

Dose rates must below 500 µR/hr

#Alpha below 20 dpm/cm^2, beta below 220 dpm/cm^2

Survey ID NFSS-13-OT-57

DOT Shipping Release Form

Project	NFSS 2013 Investigation	~~Direct Scan~~ Dose		~~Dose Rate~~ Scan		Smear Counting	
		Model	19	Model	M121 44-9	Instrument A	2929
Type	outgoing	Serial#	144060	Serial#	281980 308445	Serial#	137607
		Cal Due	1/7/14	Cal Due	10/03/14	Cal Due	10/13/14
Tech	[redacted]	Bkg	6	Bkg	35	Instrument B	
						Serial#	
Date	12/13/13					Cal Due	
						Tech	
						Date	

Cooler #	Units	1 Top	2 Front	3 Right	4 Left	5 Back	6 Bottom	Location	Smear #	A/B	Time	Counts* alpha	Counts* beta	#Ok to Release
527	cpm	30-40	30-40	30-40	40-100	20-40	20-40	left middle	5270	A	1	1	42	✓
	µR/hr	5	6	5	6	5	7							
524	cpm	30-40	30-40	30-40	30-40	30-40	30-40	Handle	5240	A	1	1	42	✓
	µR/hr	5	5	5	5	5	5							
	cpm													
	µR/hr													
	cpm													
	µR/hr													
	cpm													
	µR/hr													
	cpm													
	µR/hr													
	cpm													
	µR/hr													
	cpm													
	µR/hr													
	cpm													
	µR/hr													
	cpm													
	µR/hr													

* See smear counter data sheet for dpm results

Dose rates must below 500 µR/hr

#Alpha below 20 dpm/cm^2, beta below 220 dpm/cm^2

Survey ID NFSS-13-OT-58

Project	NFSS 2013 Investigation	URS Survey	Direct Scan	Fixed Point
Survey Type	Outgoing	Description: Coveralls + Boot used in trench.	Meter/Probe: m12 / 44-9	Meter/Probe: 2360 43-93
Tech	[redacted]	○ Denotes Smear Location	Serial#: 281980 308445	Serial#: 276943
Date	12/13/2013	* Denotes Contact Readings	Cal Due: 10/03/14	Cal Due: 10/3/14
		All Readings in cpm unless other wise noted	Bkg: 3.5	Bkg: —
			Units: cpm	Units: cpm

Scanned with pancake most visible dirt was on lower extremities 20-60/40cpm

Coveralls Back

Coveralls front

Fixed point measurements were with the 43-93

Boots no visible dirt/mud on boots 20-40/30cpm

Smear Results*

Smear	Location	α cts	βγ cts	Ct time	Inst
1	Backwaist	0	96	2	A
	visible dirt				
location	α cpm	α+β	β	N/A	
A	1	127	128		
B	0	110	110		
C	1	112	111		
D	0	126	126		
E	4	130	126		
F	1	101	100		
G	2	111	109		
H	1	113	112		
I	2	107	105		
J	4	99	95		
K	2	110	112		
L	0	99	99		
M	1	114	115		
n	1	106	105		

	2929		
Inst A	12	Inst B	
Serial#	137607	Serial#	
Cal Due	10/13/14	Cal Due	
Tech	[redacted]		
Date	12/13/2013		

* See smear counter data sheet for dpm results

Survey ID NFSS-13-RT-59

Project	NFSS 2013 Investigation	URS Survey	Direct Scan		Fixed Point	
		Description Sizzor Lift	Meter/Probe	19	Meter/Probe	2360 / 4393
Survey Type	Routine		Serial#	144060	Serial#	276943 / 197430
		○ Denotes Smear Location	Cal Due	11/7/2014	Cal Due	10/3/14
Tech	[redacted]	* Denotes Contact Readings	Bkg	6	Bkg	2, 125, 123
		All Readings in cpm unless other wise noted	Units	uR/h.	Units	Counts

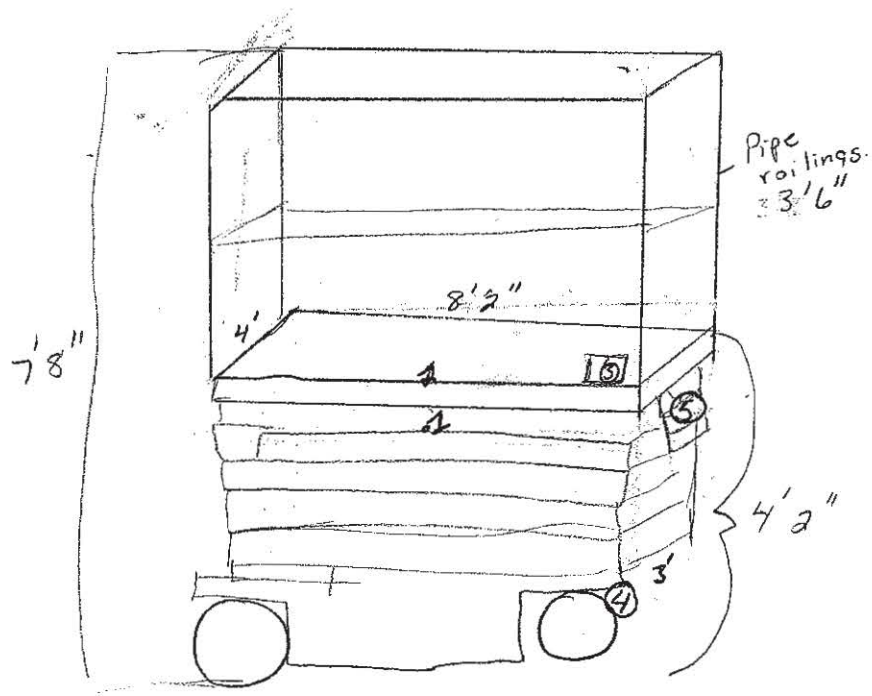

Dose rate 6-8 uR/h.

Smear Results*

Smear	Location	α cts	βγ cts	Ct time	Inst
1	top of Knuckle				
2	Deck				
3	Control				
4	tires	○			
5	Step				

Fixed Pt results

		α cpm	β cpm	Both cpm
1	top of Knuckle	3	369	369
2	Deck	30	261	291
3	Control	32	262	292
4	tires	4	171	175
5	Step	14	372	386

Inst A	2929	Inst B	2929
Serial#	137607	Serial#	147736
Cal Due	10/3/14	Cal Due	10/28/14
Tech	AJS		
Date	12/13/13		

Si the lift is rusted at the joints but overall condition is fair no obvious dirt but some flaking paint.

* See smear counter data sheet for dpm results

Survey ID NFSS·13·OT·060

DOT Shipping Release Form

		Direct Scan		Dose Rate		Smear Counting	
Project	NFSS 2013 Investigation	Model	M12	Model	M19	Instrument A	2929
Type	OUTGOING	Serial#	1028868	Serial#	144060	Serial#	137607
[redacted]		Cal Due	10/1/14	Cal Due	1-7-14	Cal Due	100314
		Bkg	20 CPM	Bkg	5 µR/HR	Instrument B	
						Serial#	
						Cal Due	
						Tec[redacted]	[redacted]
Date	121613					Date	121613

Cooler #	Units	1 Top	2 Front	3 Right	4 Left	5 Back	6 Bottom	Location	Smear #	A/B	Time	Counts* alpha	Counts* beta	#Ok to Release
571	cpm	20-30	20-30	20-40	20-30	20-30	20-40	(R) SIDE	571	A	1	0	42	✓
	µR/hr	5	6	5	5	6	5							
	cpm													
	µR/hr													
	cpm													
	µR/hr													
	cpm													
	µR/hr													
	cpm													
	µR/hr													
	cpm													
	µR/hr													
	cpm													
	µR/hr													
	cpm													
	µR/hr													
	cpm													
	µR/hr													
	cpm													
	µR/hr													
	cpm													
	µR/hr													

A

P

* See smear counter data sheet for dpm results

Dose rates must below 500 µR/hr

#Alpha below 20 dpm/cm^2, beta below 220 dpm/cm^2

Survey ID NFSS-13-OT-061

DOT Shipping Release Form

Page ___ of ___

		Direct Scan		Dose Rate		Smear Counting	
Project	NFSS 2013 Investigation	Model	M12	Model	M19	Instrument A	2929
Type	OUTGOING	Serial#	102868	Serial#	144060	Serial#	137607
[redacted]		Cal Due	101114	Cal Due	010714	Cal Due	100314
		Bkg	20 cpm	Bkg	5uR/HR	Instrument B	[redacted]
Date	121713					Serial#	
						Cal Due	
						[redacted]	
						Date	121713

Cooler #	Units	1 Top	2 Front	3 Right	4 Left	5 Back	6 Bottom	Location	Smear #	A/B	Time	Counts* alpha	Counts* beta	#Ok to Release
470	cpm	20-40	20-30	20-40	20-30	20-40	20-30	FRONT	470	A	1	0	26	✓
	µR/hr	6	5	5	5	6	5							
523	cpm	20-30	20-30	20-40	20-40	20-30	20-40	BOTTOM	523	A	1	1	48	✓
	µR/hr	5	6	6	5	5	5							
	cpm													
	µR/hr													
	cpm													
	µR/hr													
	cpm													
	µR/hr													
	cpm													
	µR/hr													
	cpm													
	µR/hr													
	cpm													
	µR/hr													
	cpm													
	µR/hr													
	cpm													
	µR/hr													
	cpm													
	µR/hr													

A

* See smear counter data sheet for dpm results

Dose rates must below 500 µR/hr

#Alpha below 20 dpm/cm^2, beta below 220 dpm/cm^2

Survey ID NFSS-13-OT-62

DOT Shipping Release Form

		Direct Scan		Dose Rate		Smear Counting	
Project	NFSS 2013 Investigation	Model	M12	Model	M19	Instrument A	2929
Type	OUTGOING	Serial#	1028668	Serial#	144060	Serial#	1376007
[redacted]		Cal Due	101114	Cal Due	1-7-14	Cal Due	1007 [redacted]
		Bkg	20 CPM	Bkg	6μR/HR	Instrument B	[redacted]
						Serial#	[redacted]
Date	121813					Cal Due	[redacted]
						[redacted]	[redacted]
						[redacted]	181 [redacted]

Cooler #	Units	1 Top	2 Front	3 Right	4 Left	5 Back	6 Bottom	Location	Smear #	A/B	Time	Counts* alpha	Counts* beta	#Ok to Release
414	cpm	20-40	20-40	20-30	20-30	20-40	20-40	FRONT	414	A	1	0	34	✓
	μR/hr	6	5	5	5	6	6							
	cpm													
	μR/hr													
	cpm													
	μR/hr													
	cpm													
	μR/hr													
	cpm													
	μR/hr													
	cpm													
	μR/hr						A							
	cpm													
	μR/hr													
	cpm													
	μR/hr													
	cpm													
	μR/hr													
	cpm													
	μR/hr													
	cpm													
	μR/hr													

* See smear counter data sheet for dpm results

Dose rates must below 500 μR/hr

#Alpha below 20 dpm/cm^2, beta below 220 dpm/cm^2

Survey ID NFSS-13-63

DOT Shipping Release Form

Project	NFSS 2013 Investigation
Type	INCOMING
Tech	[redacted]
Date	121813

Direct Scan	
Model	M12
Serial#	102868
Cal Due	101114
Bkg	23

Dose Rate	
Model	
Serial#	
Cal Due	
Bkg	

Smear Counting	
Instrument A	2929
Serial#	137607
Cal Due	100314
Instrument B	
Serial#	
Cal Due	
Tech	[redacted]
Date	121913

Cooler #	Units	1 Top	2 Front	3 Right	4 Left	5 Back	6 Bottom	Location	Smear #	A/B	Time	Counts* alpha	Counts* beta	#Ok to Release
533	cpm	20-30	20-40	10-20	10-20	20-30	10-30	TOP	533	A	PA X2	0	47	✓
	µR/hr													
534	cpm	10-30	10-20	20-30	20-30	20-40	20-30	LEFT	534	A	PA X2	0	30	✓
	µR/hr													
535	cpm	20-40	20-30	10-30	20-30	20-30	20-30	RIGHT	535	A	PA X2	0	40	✓
	µR/hr													
536	cpm	10-40	20-40	10-20	10-30	20-30	20-30	BOTTOM	536	A	PA X2	1	30	✓
	µR/hr													
	cpm													
	µR/hr													
	cpm													
	µR/hr													
	cpm													
	µR/hr													
	cpm													
	µR/hr													
	cpm													
	µR/hr													
	cpm													
	µR/hr													
	cpm													
	µR/hr													

* See smear counter data sheet for dpm results

Dose rates must below 500 µR/hr

#Alpha below 20 dpm/cm^2, beta below 220 dpm/cm^2

Survey ID NFSS-13-64

DOT Shipping Release Form

		Direct Scan		Dose Rate		Smear Counting	
Project	NFSS 2013 Investigation	Model	M12	Model	M19	Instrument A	2929
Type	OUTGOING	Serial#	102868	Serial#	144060	Serial#	137607
[redacted]		Cal Due	101114	Cal Due	010714	Cal Due	100314
		Bkg	19	Bkg	6 µR/HR	Instrument B	
						Serial#	
						Cal Due	[redacted]
						Tech	[redacted]
Date	121913					Date	121913

Cooler #	Units	1 Top	2 Front	3 Right	4 Left	5 Back	6 Bottom	Location	Smear #	A/B	Time	Counts* alpha	Counts* beta	#Ok to Release
533.0	cpm	20-30	20-40	20-30	20-30	20-40	20-40	FRONT	533.0	A	1	1	55	✓
	µR/hr	6	5	6	5	5	5							
534.0	cpm	20-30	20-30	10-30	10-40	20-30	20-40	TOP	534.0	A	1	2	41	✓
	µR/hr	5	5	6	5	5	6							
536.0	cpm	10-30	20-40	20-40	20-40	20-40	10-30	SIDE	536.0	A	1	1	52	✓
	µR/hr	6	6	5	5	6	5							
	cpm													
	µR/hr													
	cpm													
	µR/hr													
	cpm													
	µR/hr													
	cpm													
	µR/hr						NA							
	cpm						P							
	µR/hr													
	cpm													
	µR/hr													
	cpm													
	µR/hr													
	cpm													
	µR/hr													

* See smear counter data sheet for dpm results

Dose rates must below 500 µR/hr

#Alpha below 20 dpm/cm^2, beta below 220 dpm/cm^2

Survey # NFSS-13-OT 65

Project NFSS 2013 Investigation	**URS Survey**	***Direct Scan***	***Fixed Point***
	Description RELEASE OF DRILL RIG	**Meter/Probe** M12/44-9	**Meter/Probe** 2929/
Survey Type RELEASE		**Serial#** 281910/308451	**Serial#** 137607
	○ Denotes Smear Location	**Cal Due** 100314	**Cal Due** 100314
Tech [redacted]	* Denotes Contact Readings	**Bkg** 20	**Bkg**
Date [redacted]	All Readings in cpm unless other wise noted	**Units** CPM	**Units** CPM

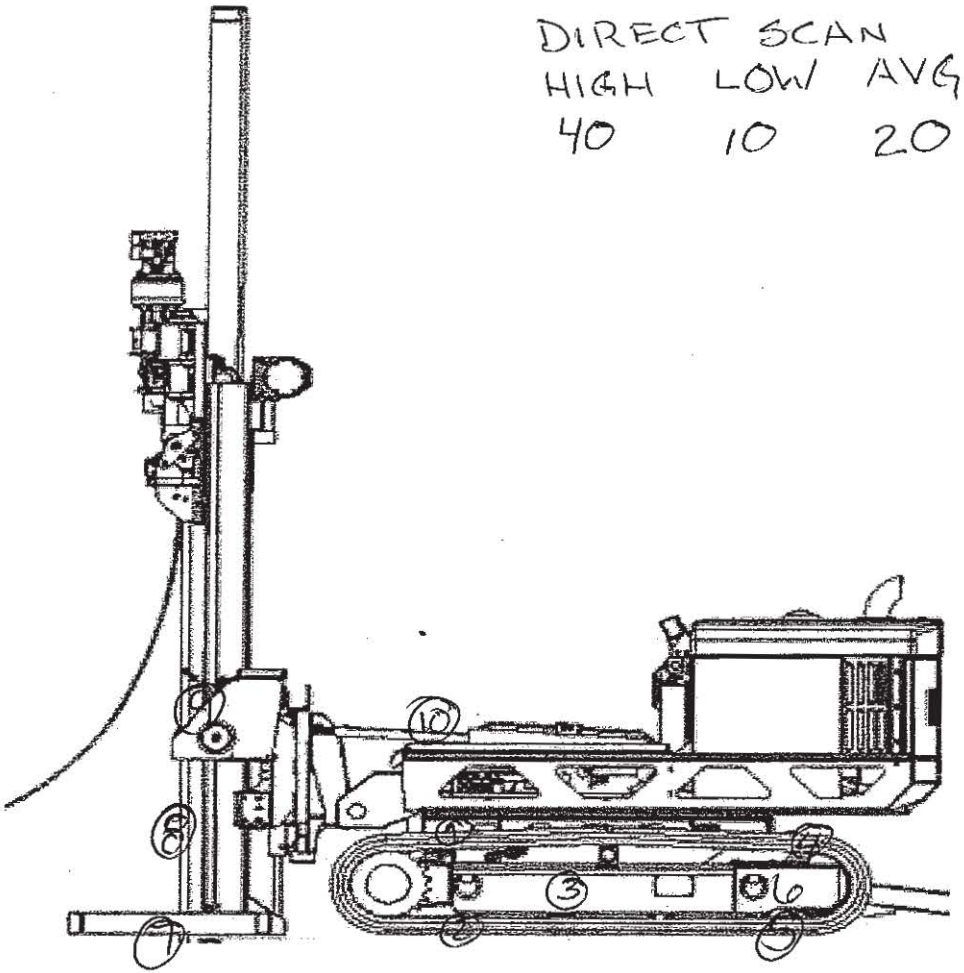

DIRECT SCAN

HIGH	LOW	AVG
40	10	20

Smear Results*

Smear	Location	α cts	βγ cts	Ct time	Inst
1	(R) TRACK	1	68	2	A
2	(R) TRACK	1	72	2	A
3	(R) FRAME	0	83	2	A
4	(L) TRACK	0	87	2	A
5	(L) TRACK	1	78	2	A
6	(L) FRAME	1	96	2	A
7	FOOT	1	80	2	A
8	CORE	1	79	2	A
9	CONTROLS	1	83	2	A
10	DECK	2	80	2	A

Inst A	2929	**Inst B**	
Serial#	137607	**Serial#**	
Cal Due	100314	**Cal Due**	
Tech	[redacted]		
Date	121913		

* See smear counter data sheet for dpm results

Survey ID NFSS-13-RT-66

Project NFSS 2013 Investigation	**URS Survey**	***Direct Scan***	***Fixed Point***
	Description FINAL WASTE SURVEY	**Meter/Probe** M19	**Meter/Probe**
Survey Type DOSE RATE		**Serial#** 144060	**Serial#**
	○ Denotes Smear Location	**Cal Due** 010714	**Cal Due**
Tech [redacted]	* Denotes Contact Readings	**Bkg** 5	**Bkg**
Date 12-19-13	All Readings in cpm unless other wise noted	**Units** µR/HR	**Units**

DOSE RATE @ 1 METER HIGH @ 1 M AWAY

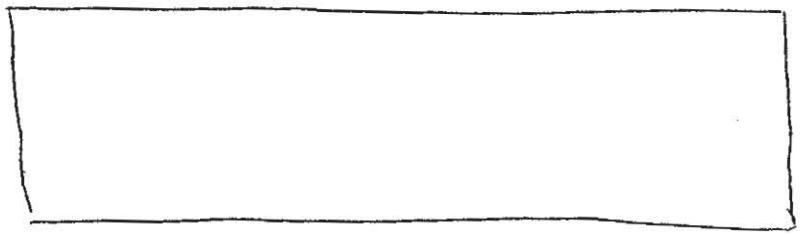

ROLL OFF

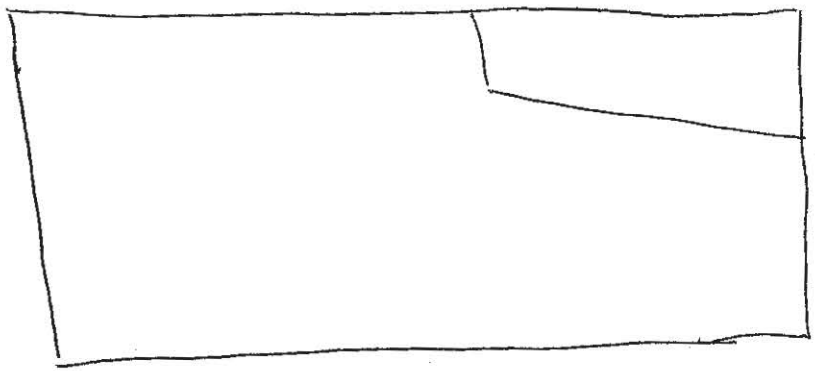

BAKER TANK

ALL DOSE RATES < 5µR/HR

Smear Results*

Smear	Location	α cts	βγ cts	Ct time	Inst

A

P

Inst A		**Inst B**	
Serial#		**Serial#**	
Cal Due		**Cal Due**	
Tech			
Date			

* See smear counter data sheet for dpm results

Survey ID NFSS-14IN067

Page ___ of ___

Project	URS Survey	Direct Scan	Fixed Point
Survey Type: Incoming	Description	Meter/Probe: 2221 / W-449	Meter/Probe
Tech: [redacted]	⬭ Denotes Smear Location	Serial#: 144803 / 137047	Serial#
Date: 6-16-14	* Denotes Contact Readings	Cal Due: 10/21/14	Cal Due
	All Readings in cpm unless other wise noted	Bkg	Bkg
		Units	Units

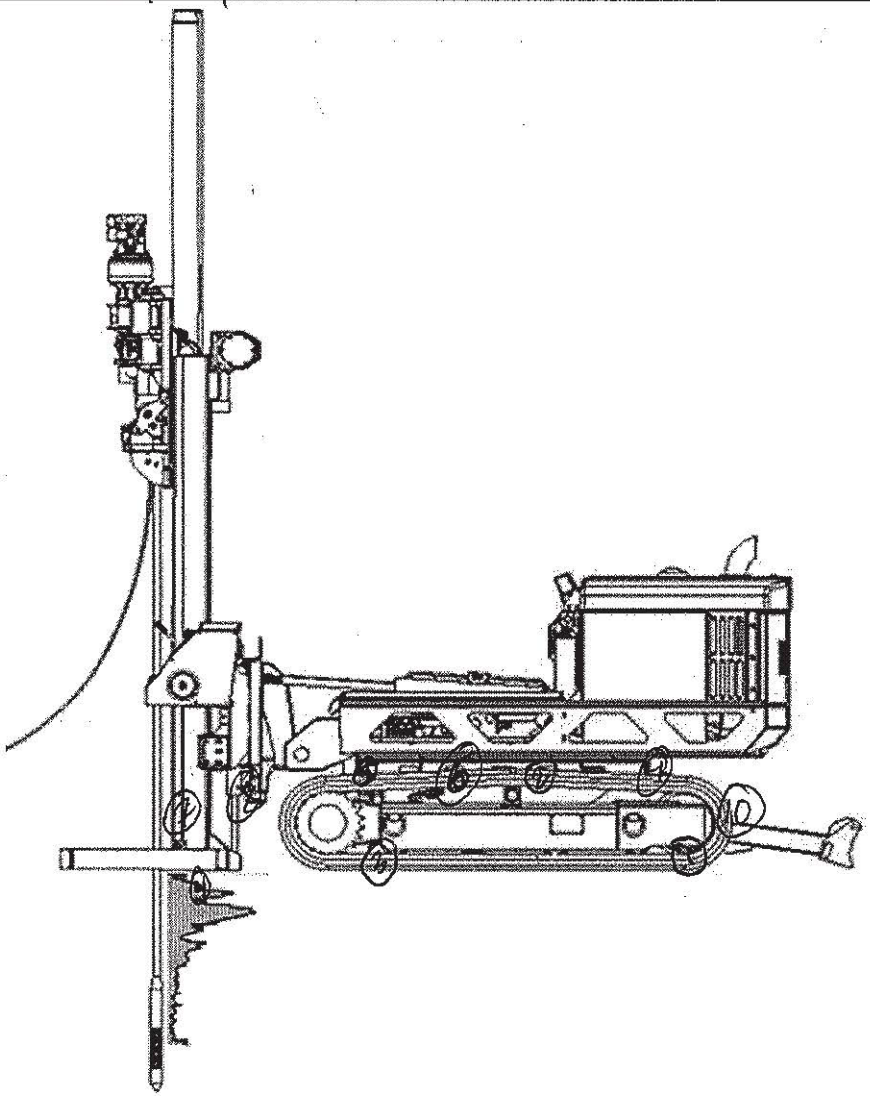

Smear Results*

Smear	Location	α cts	βγ cts	Ct time	Inst
1		0	89	2	
2		0	78	2	
3		0	85	2	
4		0	84	2	
5		1	95	2	
6		1	97	2	
7		0	88	2	
8		1	73	2	
9		0	78	2	
10		0	77	2	
11		0	66	2	

Inst A	2929 / 43-10-1	Inst B	
Serial#	12870 / 126406	Serial#	
Cal Due	5-7-15	Cal Due	
Tech	[redacted]		
Date			

* See smear counter data sheet for dpm results

NFSS-14-IN-

Project 068

Direct Scan		Smear Collection		Smear Counting	
Instrument	2221 44-9	Area (cm2)		Instrument	2929 43-10-1
Serial#	144863 / 13704	Tech		Serial#	1218901 / 126405
Cal Due	10/21/14	Signed		Cal Due	5/7/15
Bkg		Date		Bkg (cpm)	
Units	cpm			alpha	beta
Tech				Efficiency (%)	
Signed				alpha	[redacted]
Date	6/17/14			Tech	
				Signed	
				Date	

Item #	Description	Direct Scan low	Direct Scan high	Direct Scan avg	Smear#	cpm alpha	cpm beta	dpm alpha	dpm beta	notes
1	Hammer	0	40	20	1	0	~~400~~	68		
2	wrench	0	40	20	2	0	~~400~~	70		
3	razor	0	40	20	3	0	~~400~~	76		

1/77 ~~6895/637~~ ~~0-30~~ 1/1418

Survey ID NFSS-14-IN-009

Hand Equipment/ Items Survey

Project NFSS 2013 Investigation

Survey Type Incoming

Tech [redacted]

Date 6-17-14

Direct Scan

Meter/Probe 2221-449

Serial# 144863 / 137041 7

Cal Due 10-21-14

Bkg

Units cpm

Smear Counting

Inst A 2929 / 43-10-1

Serial# 121890 / 126465

Cal Due 9/7/15

Tech [redacted]

Date 6-17-14

Inst B

Serial#

Cal Due

Item #	Description	Direct Scan low	Direct Scan high	Direct Scan avg	Smear#	A/B	Ct Time	Counts * alpha	Counts * beta	notes
600	Cooler	0	40	20	Top	A	2	1	78	
601	Cooler	0	40	20	bottom	A	2	0	78	
602	Cooler	0	40	20	handle	A	2	2	76	
603	Cooler	0	40	20	leftside	A	2	0	75	
604	Cooler	0	40	20	bottom	A	2	1	85	
605	Cooler	0	40	20	handle	A	2	0	70	
606	Cooler	0	40	20	bottom	A	2	0	71	
607	Cooler	0	40	20	top	A	2	0	89	

* See smear counter data sheet for dpm results

Survey ID NFSS-14-OT-70

DOT Shipping Release Form

Project	NFSS 2013 Investigation
Type	Outdoors
[redacted]	
Date	6-18-14

Direct Scan	
Model	2221 W/449
Serial#	144863/37047
Cal Due	10/21/14
Bkg	

Dose Rate	
Model	3 W 44-2
Serial#	80145/89189
Cal Due	11-7-2014
Bkg	

Smear Counting	
Instrument A	2929/43-10-1
Serial#	121879/126405
Cal Due	5/7/15
Instrument B	
Serial#	
Cal Due	
Tech	
Date	

Cooler #	Units	1 Top	2 Front	3 Right	4 Left	5 Back	6 Bottom	Location	Smear #	A/B	Time	Counts* alpha	Counts* beta	#Ok to Release
602	cpm	20-40	20-40	20-40	20-40	20-40	20-40	handle	1	A	800	0	70	✓
	µR/hr	4	4	4	4	4	4							
	cpm													
	µR/hr													
	cpm													
	µR/hr													
	cpm													
	µR/hr													
	cpm													
	µR/hr													
	cpm													
	µR/hr													
	cpm													
	µR/hr													
	cpm													
	µR/hr													
	cpm													
	µR/hr													
	cpm													
	µR/hr													

* See smear counter data sheet for dpm results

Dose rates must below 500 µR/hr

#Alpha below 20 dpm/cm^2, beta below 220 dpm/cm^2

Survey ID NFSS-14-OT-71

DOT Shipping Release Form

Page ___ of ___

		Direct Scan		Dose Rate		Smear Counting	
Project	NFSS 2013 Investigation	Model	2221 w 44-9	Model	3w 44-2	Instrument A	2929 / 43-70-1
Type	outcrop	Serial#	144863/37047	Serial#	80145/89189	Serial#	121870 / 126405
Tech	[redacted]	Cal Due	10/21/2014	Cal Due	11-7-2014	Cal Due	5/7/15
Date	6/9	Bkg		Bkg		Instrument B	
						Serial#	
						Cal Due	
						Tech	[redacted]
						Date	6/19/14

Cooler #	Units	1 Top	2 Front	3 Right	4 Left	5 Back	6 Bottom	Location	Smear #	A/B	Time	Counts* alpha	Counts* beta	#Ok to Release
601	cpm	20-40	20-40	20-40	20-40	20-40	20-40	bottom	1	A	0740	0 0	~~44~~ 63	ARS 6/19/2014
	µR/hr	4	4	4	4	4	4							
6006	cpm	20-40	20-40	20-40	20-40	20-40	20-40	Top	2		0745	0 0	~~44~~ 82	ARS 6/19/2014
	µR/hr	4	4	4	4	4	4							
604	cpm	20-40	20-40	20-40	20-40	20-40	20-40	handle	3		0750	1	60	
	µR/hr	4	4	4	4	4	4							
	cpm													
	µR/hr													
	cpm													
	µR/hr													
	cpm													
	µR/hr													
	cpm													
	µR/hr													
	cpm													
	µR/hr													
	cpm													
	µR/hr													
	cpm													
	µR/hr													

* See smear counter data sheet for dpm results

Dose rates must below 500 µR/hr

#Alpha below 20 dpm/cm^2, beta below 220 dpm/cm^2

Survey ID NFSS-14-IW-22

Hand Equipment/ Items Survey

Project NFSS 2013 Investigation

Survey Type incoming

Tech [redacted]

Date 6.19.14

Direct Scan

Meter/Probe 2221 w 44-9

Serial# 144863 / 37047

Cal Due 10/21/14

Bkg

Units

Smear Counting

Inst A 2929/43-10-1

Serial# 121870/126405

Cal Due 5/7/15

Inst B

Serial#

Cal Due

Tech [redacted]

Date 6/19/2014

Item #	Description	Direct Scan low	Direct Scan high	Direct Scan avg	Smear#	A/B	Ct Time	Counts * alpha	Counts * beta	notes
609	Cooler	0	40	20	9	A	2	0	74	
610	Cooler	0	40	20	10	↓	↓	0	86	
608	Cooler	0	40	20	8	↓	↓	4	67	

* See smear counter data sheet for dpm results

Survey ID NFSS-14-IN-73

Hand Equipment/ Items Survey

Page 1 of

Project NFSS 2013 Investigation

Survey Type Incoming

Tech [redacted]

Date 6-20-14

Direct Scan

Meter/Probe 2241 / 44-9

Serial# 144863 / 37047

Cal Due 10-21-14

Bkg

Units

Smear Counting

Inst A 2929 / 43-10-1

Serial# 121870 / 126405

Cal Due 5/7/15

Tech [redacted]

Date 6/20/14

Inst B

Serial#

Cal Due

Item #	Description	Direct Scan low	Direct Scan high	Direct Scan avg	Smear#	A/B	Ct Time	Counts * alpha	Counts * beta	notes
601	Cooler	0	40	20	11	A	2	0	73	
612	Cooler	0	40	20	12	A	2	0	78	

* See smear counter data sheet for dpm results

NFSS-14-VFSS-14-OT.74

DOT Shipping Release Form

Page ___ of ___

		Direct Scan		Dose Rate		Smear Counting	
Project		Model	2221 w 44-9	Model	3 w 44-2	Instrument	2929 w/43-10-1
Type	outgoing	Serial#	144863/37047	Serial#	80145/89189	Serial#	121870/126405
Tech	[redacted]	Cal Due	10/21/2014	Cal Due	11/7/2014	Cal Due	[redacted]
Date	6-20-14	Bkg		Bkg		Tech	
						Date	6-20-14

Cooler #	Units	1 Top	2 Front	3 Right	4 Left	5 Back	6 Bottom	Location	Smear #	Time	Counts* alpha	Counts* beta	#Ok to Release
603	cpm	20-40	20-40	20-40	20-40	20-40	20-4	handle	3	~~745~~	0	82	
	µR/hr	4	4	4	4	4	4						
607	cpm	20-40	20-40	20-40	20-40	20-40	20-40	bottom	7	~~74~~	0	90	
	µR/hr	4	4	4	4	4	4						
	cpm												
	µR/hr												
	cpm												
	µR/hr												
	cpm												
	µR/hr												
	cpm												
	µR/hr												
	cpm												
	µR/hr												
	cpm												
	µR/hr												
	cpm												
	µR/hr												
	cpm												
	µR/hr												

* See smear counter data sheet for dpm results

Dose rates must below 500 µR/hr

#Alpha below 20 dpm/cm^2, beta below 220 dpm/cm^2

NFSS-14- NFSS-14-OT-75 DOT Shippi.. Release Form Page ___ of ___

		Direct Scan		Dose Rate		Smear Counting	
Project		Model	2221 w 44-9	Model	3 w 44-2	Instrument	2929 w/43-10-1
Type	outgoing	Serial#	144863/37047	Serial#	80145/89189	Serial#	121870/126405
Tech	[redacted]	Cal Due	10/21/2014	Cal Due	11/7/2014	Cal Due	5/7/2015
Date	6-23-14	Bkg		Bkg		Tech	[redacted]
						Date	6/23/14

Cooler #	Units	1 Top	2 Front	3 Right	4 Left	5 Back	6 Bottom	Location	Smear #	Time	Counts* alpha	Counts* beta	#Ok to Release
608	cpm	20-40	20-40	20-40	20-40	20-40	20-40	top	8		0	70	
	µR/hr	4	4	4	4	4	4						
605	cpm	20-40	20-40	20-40	20-40	20-40	20-40	handle	5		0	87	
	µR/hr	4	4	4	4	4	4						
	cpm												
	µR/hr												
	cpm												
	µR/hr												
	cpm												
	µR/hr												
	cpm												
	µR/hr												
	cpm												
	µR/hr												
	cpm												
	µR/hr												
	cpm												
	µR/hr												
	cpm												
	µR/hr												

* See smear counter data sheet for dpm results

Dose rates must below 500 µR/hr

#Alpha below 20 dpm/cm^2, beta below 220 dpm/cm^2

( ) NFSS-14-OT

Survey ID 76

Hand Equipment/ Items Survey

Page ___ of ___

Project NFSS 2013 Investigation

Survey Type

Tech [redacted]

Date 6/24/14

Direct Scan

Meter/Probe 2241 w/44-9

Serial# 144863/37047

Cal Due 10/21/14

Bkg

Units

Smear Counting

Inst A 2929/43-10-1

Serial# 121870/126405

Cal Due [redacted]

Tech [redacted]

Date 6-24-14

Inst B

Serial#

Cal Due

Item #	Description	Direct Scan low	Direct Scan high	Direct Scan avg	Smear#	A/B	Ct Time	Counts * alpha	Counts * beta	notes
613	Cooler	0	40	20	613	A	2	0	77	
614	Cooler	0	40	20	614	A	2	1	77	
615	Cooler	0	40	20	615	A	2	1	69	
616	Cooler	0	40	20	616	A	2	0	94	

* See smear counter data sheet for dpm results

NFSS-14- OT-76 77 ARS 6/24/14

DOT Shippi Release Form

age ___ of ___

Project	NFSS	**Direct Scan**		**Dose Rate**		**Smear Counting**	
		Model	2221 w 44-9	Model	3 w 44-2	Instrument	2929 w/43-10-1
Type	Outgoing	Serial#	144863/37047	Serial#	80145/89189	Serial#	121870/126405
		Cal Due	10/21/2014	Cal Due	11/7/2014	Cal Due	5/7/2015
Tech	[redacted]	Bkg	30	Bkg	4	Tech	[redacted]
						Date	06/24/14

Date 6/24/14

Cooler #	Units	1 Top (ARS 6/24/14)	2 Front	3 Right	4 Left	5 Back	6 Bottom	Location	Smear #	Time	Counts* alpha	Counts* beta	#Ok to Release
612	cpm	20 ~~3,540~~	20 ~~440~~	20-60	20-60	20-60	20-40	Back	1	2.	6	94	
	µR/hr	3.5	4	4	4	4	3.5						
	cpm							recount			1	80	✓
	µR/hr												
	cpm												
	µR/hr												
	cpm												
	µR/hr												
	cpm												
	µR/hr												
	cpm												
	µR/hr												
	cpm												
	µR/hr												
	cpm												
	µR/hr												
	cpm												
	µR/hr												
	cpm												
	µR/hr												

* See smear counter data sheet for dpm results

Dose rates must below 500 µR/hr

#Alpha below 20 dpm/cm^2, beta below 220 dpm/cm^2

NFSS-14-RT-078

Gamma Survey

Location	Manhole 6 area	Meter	2221
		SN #	147508
Date	6/25/2014	Probe	44-10
Comments	Survey of piles to be spread out at excavated areas	SN#	149451
		Cal	10/28/2014

Number	Type	Location/Description	Low cpm	High cpm	Average cpm	Notes
		North pile	9.5K	11~~00~~K	10.5K	
		middle pile	9.5K	11K	10.5K	
		South east pile	9.5K	12K	11K	
		South west pile	9500	13000	11K	

Name [redacted]

Signature

NFSS-14- ~~22~~ 79

DOT Shippi.. Release Form

age ___ of ___

		Direct Scan		Dose Rate		Smear Counting	
Project	NFSS	Model	2221 w 44-9	Model	3 w 44-2	Instrument	2929 w/43-10-1
Type	OT	Serial#	144863/37047	Serial#	80145/89189	Serial#	121870/126405
	[redacted]	Cal Due	10/21/2014	Cal Due	11/7/2014	Cal Due	5/7/2015
Tech		Bkg		Bkg		Tech	
Date	6/25/14					Date	

Cooler #	Units	1 Top	2 Front	3 Right	4 Left	5 Back	6 Bottom	Location	Smear #	Time	Counts* alpha	Counts* beta	#Ok to Release
611	cpm	20-40	20-40	20-40	20-40	20-40	20-40	top	611		0	86	
	µR/hr	4	4	4	4	4	4						
613	cpm	20-40	20-40	20-40	20-40	20-40	20-40	Handle	613		0	81	
	µR/hr	4	4	4	4	4	4						
614	cpm	20-40	20 40	20-40	20-40	20-40	20-40	Top	614		0	74	
	µR/hr	4	4	4	4	4	4						
	cpm												
	µR/hr												
	cpm												
	µR/hr												
	cpm												
	µR/hr												
	cpm												
	µR/hr												
	cpm												
	µR/hr												
	cpm												
	µR/hr												
	cpm												
	µR/hr												

* See smear counter data sheet for dpm results

Dose rates must below 500 µR/hr

#Alpha below 20 dpm/cm^2, beta below 220 dpm/cm^2

Survey ID ~~78~~ 80

Hand Equipment/ Items Survey

Page 1 of 1

Project NFSS 2013 Investigation

Survey Type IW

Tech [redacted]

Date 6/25/14

Direct Scan

Meter/Probe 2221 w/44-9

Serial# 144863/37047

Cal Due 10/21/2014

Bkg

Units

Smear Counting

Inst A 7929 W 43-10

Serial# 121870/126405

Cal Due [redacted]

Tech [redacted]

Date [redacted]

Inst B

Serial#

Cal Due

Item #	Description	Direct Scan low	Direct Scan high	Direct Scan avg	Smear#	A/B	Ct Time	Counts * alpha	Counts * beta	notes
617	Cooler	0	40	20	617		2	0	84	
618	Cooler	0	40	20	618		2	0	83	
619	Cooler	0	40	20	619		2	0	91	
620	Cooler	0	40	20	620		2	0	79	

* See smear counter data sheet for dpm results

NFSS-14- 81

DOT Shippi[illegible] [illegible]elease Form

		Direct Scan		Dose Rate		Smear Counting	
Project	NFSS	Model	2221 w 44-9	Model	3 w 44-2	Instrument	2929 w/43-10-1
Type	OT	Serial#	144863/37047	Serial#	80145/89189	Serial#	121870/126405
Tech	[redacted]	Cal Due	10/21/2014	Cal Due	11/7/2014	Cal Due	5/7/2015
Date	6/26/14	Bkg		Bkg		Tech	[redacted]
						Date	6/26/14 2,94

Cooler #	Units	1 Top	2 Front	3 Right	4 Left	5 Back	6 Bottom	Location	Smear #	Time	Counts* alpha	Counts* beta	#Ok to Release
609	cpm	20-40	20-40	20-40	20-40	20-40	20-40	handle	609	2	0	109	
	µR/hr	4	4	4	4	4	4						
618	cpm	20-40	20-40	20-40	20-40	20-40	20-40	TOP	618	2	1	86	
	µR/hr	4	4	4	4	4	4						
	cpm												
	µR/hr												
	cpm												
	µR/hr												
	cpm												
	µR/hr												
	cpm												
	µR/hr												
	cpm												
	µR/hr												
	cpm												
	µR/hr												
	cpm												
	µR/hr												
	cpm												
	µR/hr												

* See smear counter data sheet for dpm results

Dose rates must below 500 µR/hr

#Alpha below 20 dpm/cm^2, beta below 220 dpm/cm^2

NFSS-14- OT- 82

DOT Shippi.. .Release Form

		Direct Scan		Dose Rate		Smear Counting	
Project		Model	2221 w 44-9	Model	3 w 44-2	Instrument	2929 w/43-10-1
Type		Serial#	144863/37047	Serial#	80145/89189	Serial#	121870/126405
	[redacted]	Cal Due	10/21/2014	Cal Due	11/7/2014	Ca[redacted]015	
Tech		Bkg		Bkg		Te[redacted]	
						Date	6/26/14 2,94
Date	6/26/14						

Cooler #	Units	1 Top	2 Front	3 Right	4 Left	5 Back	6 Bottom	Location	Smear #	Time	Counts* alpha	Counts* beta	#Ok to Release
617	cpm	20-40	20-40	20-40	20-40	20-40	20-4	handle	617	2	0	86	
	µR/hr	4	4	4	4	4	4						
620	cpm	20-40	20-40	20-40	20-40	20-40	20-40	back	620	2	1	86	
	µR/hr	4	4	4	4	4	4						
	cpm												
	µR/hr												
	cpm												
	µR/hr												
	cpm												
	µR/hr												
	cpm												
	µR/hr												
	cpm												
	µR/hr												
	cpm												
	µR/hr												
	cpm												
	µR/hr												
	cpm												
	µR/hr												

* See smear counter data sheet for dpm results

Dose rates must below 500 µR/hr

#Alpha below 20 dpm/cm^2, beta below 220 dpm/cm^2

Survey ID NFSS-IW-14-83

Project	URS Survey	Direct Scan	Fixed Point
Survey Type INHUMAN	Description Excavator	Meter/Probe 2221 IW 44-9	Meter/Probe
Tech [redacted]	○ Denotes Smear Location	Serial# 144865/37647	Serial#
Date 6-27-14	* Denotes Contact Readings	Cal Due 10-21-2014	Cal Due
	All Readings in cpm unless other wise noted	Bkg	Bkg
		Units	Units 1-94

T 1 72 71
T 0 92 92
T 1 76 77
B 2 86 83
Cab 2 82 80

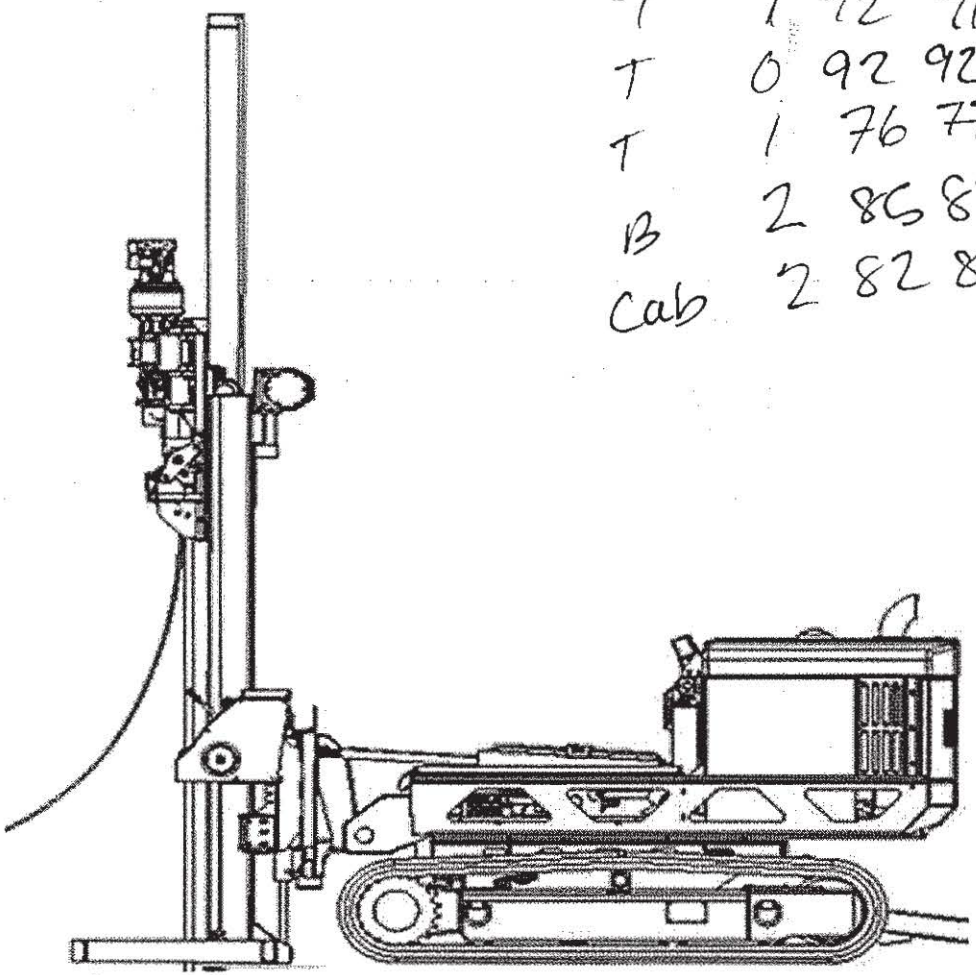

Smear Results*

Smear	Location	α cts	βγ cts	Ct time	Inst
1	Cab seat	0	72		
2	pedals	0	74		
3	gears	0	62		
4	L track	2	80		
5	R track	1	66		
6	arm	1	76		
7	bucket	0	74		
8	blade	0	79		
9	blade	2	85		
10	under track	0	71		
11	under track	0	73		
12	thumb	0	68		
13	track	2	75		

Inst A 2929/IW 43-10-1 Inst B
Serial# 121870-126405 Serial#
Cal Due 5-7-15 Cal Due
Tech [redacted]
Date 6-27-14

* See smear counter data sheet for dpm results

Survey ID NFSS-14-IN-284

Hand Equipment/ Items Survey

Page 1 of 1

Project	NFSS 2013 Investigation	*Direct Scan*		*Smear Counting*	
		Meter/Probe	2221-44-9	Inst A	2929 W/43-1B-1
Survey Type	Incoming tools	Serial#	141863/37047	Serial#	121870/126405
		Cal Due	10-21-14	Cal Due	5-7-15
Tech	[redacted]	Bkg		Tech	[redacted]
Date	6.27.14	Units		Date	6.27.14

Inst B ~~Serial#~~ ~~Cal Due~~

1-94

Item #	Description	Direct Scan low	Direct Scan high	Direct Scan avg	Smear#	A/B	Ct Time	Counts * alpha	Counts * beta	notes
1	shovel	0	40	20	1	A	2	0	76	
2	shovel	0	40	20	2	A	2	1	79	
3	shovel	0	40	20	3	A	2	1	77	
4	pump	0	40	20	4	A	2	0	88	
5	hose	0	40	20	5	A	2	1	79	
6	hose	0	40	20	6	A	2	0	71	
7	air hog	0	40	20	7	A	2	0	81	
8	squeegee	0	40	20	8	A	2	0	82	

* See smear counter data sheet for dpm results

Survey ID 85

Hand Equipment/ Items Survey

Page 1 of

Project NFSS 2013 Investigation

Survey Type Incoming cooler

Tech [redacted]

Date 10-30-14

Direct Scan

Meter/Probe 2241-44-9

Serial# 263-37047

Cal Due 10-2-14

Bkg

Units

Smear Counting

Inst A 2929-N / 43-10-1

Serial# 12870 / 12405

Cal Due 5-7-15

Tech [redacted] / [redacted]

Date 6-30-14 0,78

Inst B

Serial#

Cal Due

Item #	Description	Direct Scan low	Direct Scan high	Direct Scan avg	Smear#	A/B	Ct Time	Counts * alpha	Counts * beta	notes
621	Cooler	0	40	20	621		2	0	88	
622	Cooler	0	40	20	622		2	0	90	
623	Cooler	0	40	20	623		2	0	74	
624	Cooler	0	40	20	624		2	0	67	
625	Cooler	0	40	20	625		2	1	74	
626	Cooler	0	40	20	626		2	0	68	

* See smear counter data sheet for dpm results

Survey ID TN 86

Hand Equipment/ Items Survey

Page 1 of 1

Project NFSS 2013 Investigation

Survey Type Tools

Tech [redacted]

Date 7-1-1

Direct Scan

Meter/Probe 2221 w 44-9

Serial# 144863/37047

Cal Due 10/21/14

Bkg

Units

Smear Counting

Inst A 2929 w/43-10

Serial# 121870/124105

Cal Due 6/7/15

Inst B N/A

Serial# N/A

Cal Due N/A

Tech [redacted]

[redacted] 14

0.93

Item #	Description	Direct Scan low	Direct Scan high	Direct Scan avg	Smear#	A/B	Ct Time	Counts * alpha	Counts * beta	notes
1	sprayer	0	40	20	1	A	2	0	77	
2	pump	0	40	20	2	A	2	0	~~77~~ 72	
3	nose	0	40	20	3	A	2	0	79	

* See smear counter data sheet for dpm results

NFSS-14- DOT Shippi.. .Release Form

Project 87

Type outgoing

Tech [redacted]

Date [redacted]

Direct Scan		Dose Rate		Smear Counting	
Model	2221 w 44-9	Model	3 w 44-2	Instrument	2929 w/43-10-1
Serial#	144863/37047	Serial#	80145/89189	Serial#	121870/126405
Cal Due	10/21/2014	Cal Due	11/7/2014	Cal Due	5/7/2015
Bkg		Bkg		Tech	[redacted]
				[redacted]	7.14 0.93

Cooler #	Units	1 Top	2 Front	3 Right	4 Left	5 Back	6 Bottom	Location	Smear #	Time	Counts* alpha	Counts* beta	#Ok to Release
6116	cpm	20-40	20-40	20-40	20-40	20-40	20-40	handle	6116	2	1	89	
	µR/hr	4	4	4	4	4	4						
6119	cpm	20-40	20-40	20-40	20-40	20-40	20-40	Top	6119	2	0	82	
	µR/hr	4	4	4	4	4	4						
621	cpm	20-40	20-40	20-40	20-40	20-40	20-40	Front	621	2	1	89	
	µR/hr	4	4	4	4	4	4						
	cpm												
	µR/hr												
	cpm												
	µR/hr												
	cpm												
	µR/hr												
	cpm												
	µR/hr												
	cpm												
	µR/hr												
	cpm												
	µR/hr												
	cpm												
	µR/hr												

* See smear counter data sheet for dpm results

Dose rates must below 500 µR/hr

#Alpha below 20 dpm/cm^2, beta below 220 dpm/cm^2

Survey ID 88

Hand Equipment/ Items Survey

Page 1 of 1

Project NFSS 2013 Investigation

Survey Type outgoing tools

Tech [redacted]

Date 7-1-14

Direct Scan

Meter/Probe 2221 w 44-9

Serial# 144863/37047

Cal Due 10/21/2014

Bkg

Units

Smear Counting

Inst A 2929 w/43-10-1

Serial# 121870/126405

Cal Due 5/7/2015

Tech [redacted]

Date 7-1-14

Inst B

Serial#

Cal Due

N/A

Item #	Description	Direct Scan low	Direct Scan high	Direct Scan avg	Smear#	A/B	Ct Time	Counts * alpha	Counts * beta	notes
1	Sprayer	0	40	20	1		2	0	77	
2	Shovel	0	40	20	2		2	0	69	
3	Shovel	0	40	20	3		2	0	71	
4	Squeegee	0	40	20	4		2	1	76	
5	hose	0	40	20	5		2	0	80	
6	bucket	0	40	20	6		2	0	90	
7	harness	0	40	20	7		2	1	87	
8	faceshield	0	40	20	8		2	0	62	
9	hog hose	0	40	20	9		2	0	86	
10	shovel	0	40	20	10		2	0	62	
11	hose	0	40	20	11		2	0	72	
12	pump	0	40	20	12		2	0	80	
13	excavator bucket	0	40	20	13		2	0	79	
14	excavator bucket	0	40	20	14		2	0	72	
15	excavator thumb	0	40	20	15		2	0	98	
16	excavator thumb	0	40	20	16		2	0	80	

* See smear counter data sheet for dpm results

Survey ID N FSS-14-OT-89

Project	FUSRAP	URS Survey	
Survey Type	Outgoing	Description	Drill Rig
Tech	[redacted]	○ Denotes Smear Location	
Date	[redacted] 7-2-14	* Denotes Contact Readings	
		All Readings in cpm unless other wise noted	

Direct Scan		Fixed Point	
Meter/Probe	224-44-9	Meter/Probe	
Serial#	144863/370417	Serial#	
Cal Due	10-21-14	Cal Due	
Bkg	0.80	Bkg	
Units		Units	

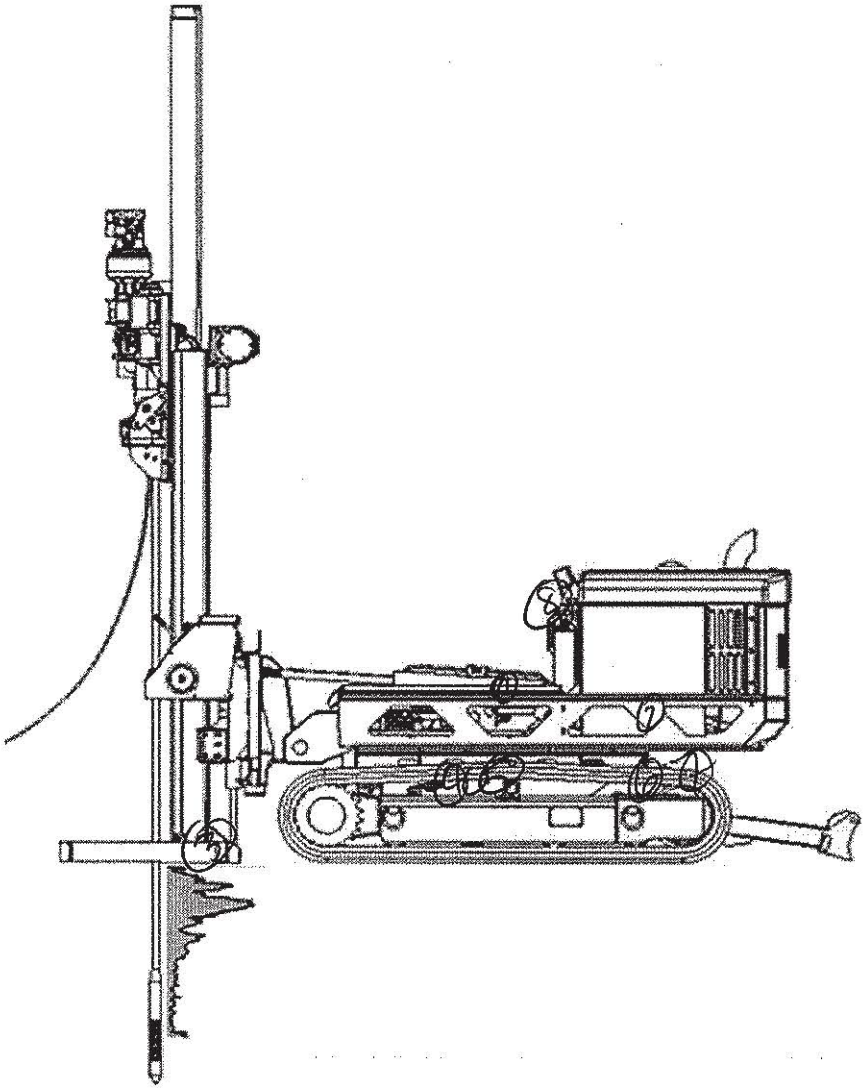

T

Smear Results*

Smear	Location	α cts	βγ cts	Ct time	Inst
1	diamond	0	93	2	
2	shoe	0	93	2	
3	foot	1	83	2	
4	L track	0	77	2	
5	L track	0	89	2	
6	R track	0	71	2	
7	R track	0	88	2	
8	controls	0	85	2	
9	hammer	0	84	2	
10	handcontrol	1	78	2	

Inst A	2929 N	Inst B	43-10-1
Serial#	121870/126	Serial#	465
Cal Due	6-7-15	Cal Due	
Tech	[redacted]		
Date			

* See smear counter data sheet for dpm results

Survey ID NFSS-14-90

Hand Equipment/ Items Survey

Project NFSS 2013 Investigation

Survey Type outgoing

Tech [redacted]

Date 8-2-14

Direct Scan

Meter/Probe 2221 w/49-9

Serial# 144863/37047

Cal Due 10-21-2014

Bkg 40

Units

Smear Counting

Inst A 2929 w/43-10-1

Serial# 121870/126405

Cal Due [redacted]

Tech [redacted]

Date 8-2-14

Inst B

Serial#

Cal Due

0,80

Item #	Description	Direct Scan low	Direct Scan high	Direct Scan avg	Smear#	A/B	Ct Time	Counts * alpha	Counts * beta	notes
1	cooler 622									
2	cooler 625									
3	cooler 626									

N/A

* coolers returned empty / ~~unused~~ unused.

* See smear counter data sheet for dpm results

Survey ID NFSS-14-07-91

Hand Equipment/ Items Survey

Project NFSS 2013 Investigation

Survey Type outgoing

Tech [redacted]

Date 7-2-14

Direct Scan	
Meter/Probe	2221/44-9
Serial#	144803/357097
Cal Due	10/21/2014
Bkg	40
Units	

Smear Counting			
Inst A	2929/W 43-10-1	Inst B	
Serial#	121870/126405	Serial#	
Cal Due	[redacted]	Cal Due	
Tech	[redacted]		
Date	7-2-14		

0,20

Item #	Description	Direct Scan low	Direct Scan high	Direct Scan avg	Smear#	A/B	Ct Time	Counts * alpha	Counts * beta	notes
1	cooler of batteries	0	40	20	1	A	2	0	72	
2	cooler of batteries	0	40	20	2	A	2	0	99	
3	5gal of hydrolic oil	0	40	20	3	A	2	0	66	

* See smear counter data sheet for dpm results

NFSS-14- 92

DOT Shippi.. .elease Form

Project

Type outpoina

Tech [redacted]

Date 7-2-14

Direct Scan		Dose Rate		Smear Counting	
Model	2221 w 44-9	Model	3 w 44-2	Instrument	2929 w/43-10-1
Serial#	144863/37047	Serial#	80145/89189	Serial#	121870/126405
Cal Due	10/21/2014	Cal Due	11/7/2014	Cal Due	5/7/2015
Bkg	40	Bkg		Tech	[redacted]
				Date	7-2-14

Cooler #	Units	1 Top	2 Front	3 Right	4 Left	5 Back	6 Bottom	Location	Smear #	Time	Counts* alpha	Counts* beta	#Ok to Release
610	cpm	20-40	20-40	20-40	20-40	20-40	20-40	handle	610	2	0	97	
	µR/hr	4	4	4	4	4	4						
615	cpm	20-40	20-40	20-40	20-40	20-40	20-40	bottom	615	2	0	80	
	µR/hr	4	4	4	4	4	4						
623	cpm	20-40	20-40	20-40	20-40	20-40	20-40	top	623	2	0	88	
	µR/hr	4	4	4	4	4	4						
624	cpm	20-40	20-40	20-40	20-40	20-40	20-40	top	624	2	0	84	
	µR/hr	4	4	4	4	4	4						
	cpm												
	µR/hr												
	cpm												
	µR/hr												
	cpm												
	µR/hr												
	cpm												
	µR/hr												
	cpm												
	µR/hr												
	cpm												
	µR/hr												

* See smear counter data sheet for dpm results

Dose rates must below 500 µR/hr

#Alpha below 20 dpm/cm^2, beta below 220 dpm/cm^2

Survey ID NFSS14-OT-93

Hand Equipment/ Items Survey

Project NFSS 2013 Investigation

Survey Type Baker Tank

Tech [redacted]

Date 7-2-14

Direct Scan

Meter/Probe 2221-/449

Serial# 148163/37047

Cal Due 10/21/14

Bkg 40

Units

Smear Counting

Inst A 2929/W/43-10-1

Serial# 121870/126405

Cal Due 5-12-15

Tech [redacted]

Date 7-2-14

Inst B N/A

Serial#

Cal Due

0,80

Item #	Description	Direct Scan low	Direct Scan high	Direct Scan avg	Smear#	A/B	Ct Time	Counts * alpha	Counts * beta	notes
1	hatch	0	40	20	1	A	2	1	78	
2	floor	0	40	20	2	A	2	0	75	
3	hatch	0	40	20	3	A	2	0	92	
4	wall (inside)	0	40	20	4	A	2	0	82	
5	wall (inside)	0	40	20	5	A	2	0	65	
6	roof	0	40	20	6	A	2	1	64	
7	hatch	0	40	20	7	A	2	1	78	
8	Back	0	40	20	8	A	2	0	74	
9	floor	0	40	20	9	A	2	0	70	
10	wall (outside)	0	40	20	10	A	2	0	91	
11	wall (outside)	0	40	20	11	A	2	1	96	
12	wall (outside)	0	40	20	12	A	2	0	81	
13	stairs	0	40	20	13	A	2	1	86	
14	handrail	0	40	20	14	A	2	0	87	

* See smear counter data sheet for dpm results

* inside of tank steam cleaned and power washed

NFSS-14- RT - 94

DOT Shippi[illegible] Release Form

Page ___ of ___

		Direct Scan		Dose Rate		Smear Counting	
Project		Model	2221 w 44-9	Model	3 w 44-2	Instrument	2929 w/43-10-1
Type	RT	Serial#	144863/37047	Serial#	80145/89189	Serial#	121870/126405
		Cal Due	10/21/2014	Cal Due	11/7/2014	Cal Due	5/7/2015
Tech	[redacted]	Bkg	40	Bkg		Tech	[redacted]
						Date	[redacted]

Date

~~Cooler #~~ (ice)	Units	1 Top	2 Front	3 Right	4 Left	5 Back	6 Bottom	Location	Smear #	Time	Counts* alpha	Counts* beta	#Ok to Release
Roll-off	cpm												
	µR/hr	4-5	4-5	4-5	4-5	4-5	N/A						
manhole	cpm												
	µR/hr	4-5	4-5	4-5	4-5	4-5	N/A						
	cpm												
	µR/hr												
	cpm												
	µR/hr												
	cpm												
	µR/hr												
	cpm												
	µR/hr												
	cpm												
	µR/hr												
	cpm												
	µR/hr												
	cpm												
	µR/hr												
	cpm												
	µR/hr												

* See smear counter data sheet for dpm results

Dose rates must below 500 µR/hr

#Alpha below 20 dpm/cm^2, beta below 220 dpm/cm^2

Survey ID NPSS-OT 94/95

Project	URS Survey	Direct Scan	Fixed Point
Survey Type: Outgoing	Description: outgoing excavator	Meter/Probe: 2224 w/ 44-9	Meter/Probe
Tech: [redacted]	⬭ Denotes Smear Location	Serial#: 44865 / 37047	Serial#
Date: 7-7-14	* Denotes Contact Readings	Cal Due: 10/21/14	Cal Due
	All Readings in cpm unless other wise noted	Bkg: 10	Bkg
		Units	Units

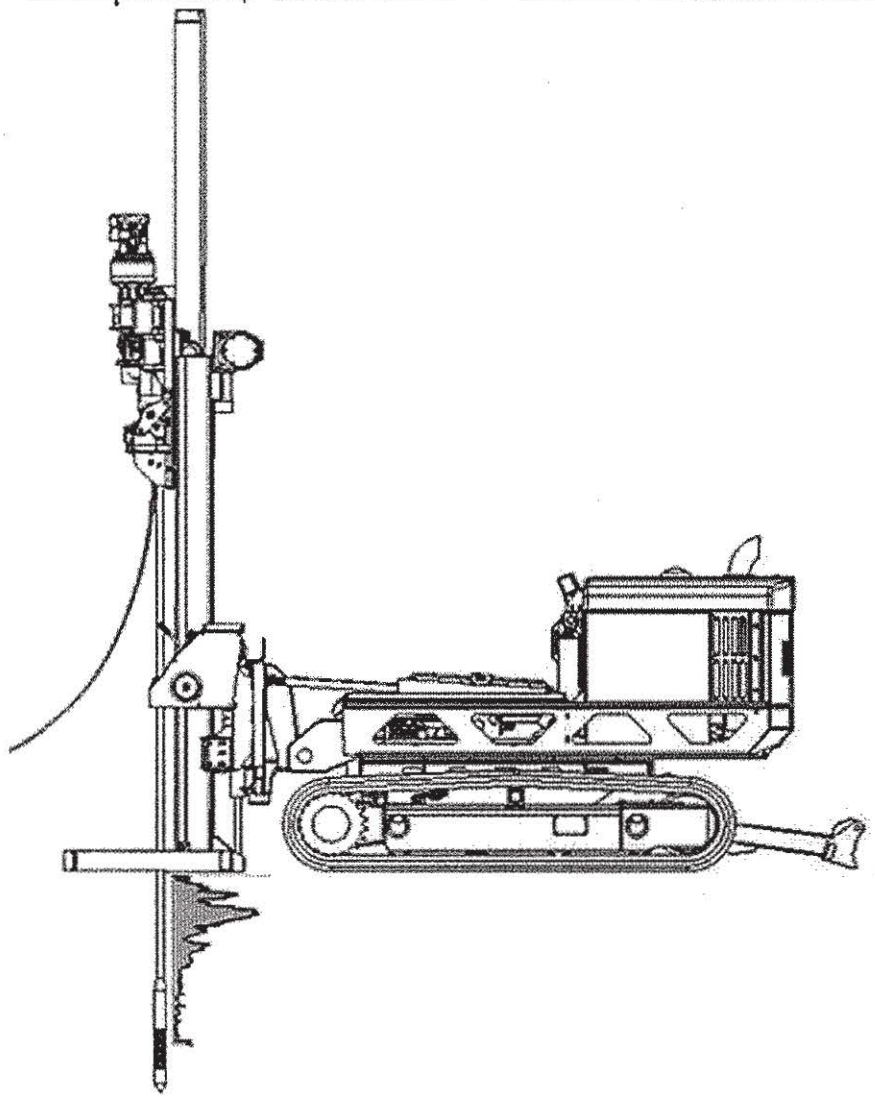

T

Smear Results*

Smear	Location	α cts	βγ cts	Ct time	Inst
1	arm	2	77	2	
2	cab	0	82	2	
3	pedal	0	74	2	
4	rtrack	0	79	2	
5	controls	1	70	2	
6	bucket	0	68	2	
7	bucket	1	64	2	
8	thumb	1	75	2	
9	rtrack	1	70	2	
10	ltrack	1	76	2	
11	ltrack	0	78	2	
12	blade	0	76	2	
13	blade	1	106	2	
14	pump	0	81	2	
15	hose	0	72	2	
16	bucket			2	

Inst A	2929 - W/ 43-10-1	Inst B	
Serial#	12/870/126405	Serial#	
Cal Due	5/7/15	Cal Due	
Tech	[redacted]		
Date			

* See smear counter data sheet for dpm results

Appendix E-4-3

Smear Sample Results

Count Date	Survey Id	Smear #	count time	137607				147736				137607.0		147736.0		Total Activity dpm	Notes
				Background		Smear		Background		Smear		Activity		Activity			
				a cts	bg cts	a cts	bg cts	a cts	bg cts	a cts	bg cts	a dpm	bg dpm	a dpm	bg dpm		
11/4/2013	NFSS-13-IN-1	500	2	0	79	0	75					0.0	-10.6			-10.6	
11/4/2013	NFSS-13-IN-1	501	2					1	72	0	69			-1.6	-7.5	-9.1	
11/4/2013	NFSS-13-IN-1	502	2	0	79	3	89					4.9	26.4			31.3	
11/4/2013	NFSS-13-IN-1	503	2					1	72	0	64			-1.6	-20.1	-21.7	
11/4/2013	NFSS-13-IN-1	504	2	0	79	0	88					0.0	23.8			23.8	
11/4/2013	NFSS-13-IN-1	505	2					1	72	0	65			-1.6	-17.6	-19.2	
11/4/2013	NFSS-13-IN-1	506	2	0	79	2	77					3.3	-5.3			-2.0	
11/4/2013	NFSS-13-IN-1	507	2					1	72	0	86			-1.6	35.1	33.5	
11/5/2013	NFSS-13-IN-2	1	2	0	35	1	89					1.6	142.7			144.3	
11/5/2013	NFSS-13-IN-2	2	2	0	35	0	85					0.0	132.1			132.1	
11/5/2013	NFSS-13-IN-2	3	2	0	35	0	89					0.0	142.7			142.7	
11/5/2013	NFSS-13-IN-2	4	2	0	35	1	74					1.6	103.1			104.7	
11/5/2013	NFSS-13-IN-2	5	2	0	35	1	85					1.6	132.1			133.8	
11/5/2013	NFSS-13-IN-2	6	2	0	35	1	67					1.6	84.6			86.2	
11/5/2013	NFSS-13-IN-2	7	2	0	35	0	86					0.0	134.8			134.8	
11/5/2013	NFSS-13-IN-2	8	2	0	35	0	63					0.0	74.0			74.0	
11/5/2013	NFSS-13-IN-2	9	2	0	35	1	88					1.6	140.1			141.7	
11/5/2013	NFSS-13-IN-2	10	2	0	35	0	74					0.0	103.1			103.1	
11/5/2013	NFSS-13-IN-3	1	2					1	52	0	88			-1.6	90.4	88.8	
11/5/2013	NFSS-13-IN-3	2	2					1	52	2	72			1.6	50.2	51.8	
11/5/2013	NFSS-13-IN-3	3	2					1	52	2	85			1.6	82.8	84.5	
11/5/2013	NFSS-13-IN-3	4	2					1	52	1	82			0.0	75.3	75.3	
11/5/2013	NFSS-13-IN-3	5	2					1	52	1	82			0.0	75.3	75.3	
11/5/2013	NFSS-13-IN-3	6	2					1	52	0	91			-1.6	97.9	96.3	
11/5/2013	NFSS-13-IN-3	7	2					1	52	0	75			-1.6	57.7	56.1	
11/5/2013	NFSS-13-IN-3	8	2					1	52	1	71			0.0	47.7	47.7	
11/5/2013	NFSS-13-IN-3	9	2					1	52	0	84			-1.6	80.3	78.7	
11/5/2013	NFSS-13-IN-3	10	2					1	52	1	64			0.0	30.1	30.1	
11/5/2013	NFSS-13-IN-4	1	2	0	35	0	74					0.0	103.1			103.1	
11/5/2013	NFSS-13-IN-4	2	2					1	52	0	82			-1.6	75.3	73.7	
11/5/2013	NFSS-13-IN-4	3	2	0	35	1	91					1.6	148.0			149.6	
11/5/2013	NFSS-13-IN-4	4	2					1	52	1	82			0.0	75.3	75.3	
11/5/2013	NFSS-13-IN-4	5	2	0	35	1	75					1.6	105.7			107.3	
11/5/2013	NFSS-13-IN-4	6	2					1	52	0	81			-1.6	72.8	71.2	
11/5/2013	NFSS-13-IN-4	7	2	0	35	0	68					0.0	87.2			87.2	
11/5/2013	NFSS-13-IN-4	8	2					1	52	0	70			-1.6	45.2	43.6	
11/5/2013	NFSS-13-IN-4	9	2	0	35	1	78					1.6	113.6			115.3	
11/5/2013	NFSS-13-IN-4	10	2					1	52	0	91			-1.6	97.9	96.3	
11/5/2013	NFSS-13-IN-5	1	2	0	35	0	80					0.0	118.9			118.9	
11/5/2013	NFSS-13-IN-5	2	2					1	52	0	85			-1.6	82.8	81.2	
11/5/2013	NFSS-13-IN-5	3	2	0	35	0	81					0.0	121.6			121.6	
11/5/2013	NFSS-13-IN-5	4	2					1	52	4	90			4.8	95.4	100.2	
11/6/2013	NFSS-13-IN-6	508	2	0	71	1	83					1.6	31.7			33.3	
11/6/2013	NFSS-13-IN-6	509	2					1	66	1	89			0.0	57.7	57.7	
11/6/2013	NFSS-13-IN-6	510	2					1	66	1	89			0.0	57.7	57.7	
11/6/2013	NFSS-13-IN-6	511	2	0	71	2	108					3.3	97.8			101.0	
11/6/2013	NFSS-13-IN-6	512	2					1	66	1	55			0.0	-27.6	-27.6	
11/6/2013	NFSS-13-IN-6	511	2	0	71	0	85					0.0	37.0			37.0	recount
11/6/2013	NFSS-13-OT-7	492o	1	0	40	1	46					3.3	31.7			35.0	
11/8/2013	NFSS-13-OT-8	OT-1	1					0	47	2	41			6.4	-30.1	-23.7	
11/8/2013	NFSS-13-OT-8	OT-2	1					0	47	0	41			0.0	-30.1	-30.1	
11/8/2013	NFSS-13-OT-8	OT-3	1	0	42	0	42									0.0	
11/8/2013	NFSS-13-OT-8	OT-4	1	0	47	0	40					0.0	-37.0			-37.0	
11/8/2013	NFSS-13-IN-9		2					0	85	0	74			0.0	-27.6	-27.6	
11/8/2013	NFSS-13-IN-9		2	0	92	1	69					1.6	-60.8			-59.1	
11/8/2013	NFSS-13-RT-10	1	2	0	92	0	82					0.0	-26.4			-26.4	
11/8/2013	NFSS-13-RT-10	2	2					0	85	0	72			0.0	-32.6	-32.6	
11/8/2013	NFSS-13-RT-10	3	2	0	92	0	71					0.0	-55.5			-55.5	
11/8/2013	NFSS-13-RT-10	4	2					0	85	0	70			0.0	-37.7	-37.7	
11/8/2013	NFSS-13-RT-10	5	2	0	92	0	80					0.0	-31.7			-31.7	
11/8/2013	NFSS-13-RT-10	6	2					0	85	1	81			1.6	-10.0	-8.4	
11/8/2013	NFSS-13-RT-10	7	2	0	92	0	83					0.0	-23.8			-23.8	
11/8/2013	NFSS-13-RT-10	8	2					0	85	0	83			0.0	-5.0	-5.0	
11/11/2013	NFSS-13-OT-8	454O	1	0	47	0	48					0.0	5.3			5.3	
11/11/2013	NFSS-13-OT-11	1	1	0	47	0	48					0.0	5.3			5.3	
11/12/2013	nfss-13-ot-12	1	1	0	44	0	45					0.0	5.3			5.3	
11/12/2013	nfss-13-ot-12	2	1	0	44	0	47					0.0	15.9			15.9	

Count Date	Survey Id	Smear #	count time	137607				147736				137607.0		147736.0		Total Activity dpm	Notes
				Background		Smear		Background		Smear		Activity		Activity			
				a cts	bg cts	a cts	bg cts	a cts	bg cts	a cts	bg cts	a dpm	bg dpm	a dpm	bg dpm		
11/13/2013	nfss-13-OT-13	1	1	0	43	0	44					0.0	5.3			5.3	
11/13/2013	nfss-13-OT-13	2	1	0	43	0	54					0.0	58.1			58.1	
11/13/2013	nfss-13-OT-13	3	1	0	43	0	34					0.0	-47.6			-47.6	
11/14/2013	nfss-13-OT-14	1	1	0	50	0	49					0.0	-5.3			-5.3	
11/14/2013	nfss-13-OT-14	2	1	0	50	0	39					0.0	-58.1			-58.1	
11/15/2013	nfss-13-OT-15	1	1	0	37	0	47					0.0	52.9			52.9	
11/15/2013	nfss-13-OT-15	2	1	0	37	0	45					0.0	42.3			42.3	
11/18/2013	nfss-13-OT-17	1	1	0	50	1	56					3.3	31.7			35.0	
11/18/2013	nfss-13-OT-17	2	1	0	50	4	60					13.0	52.9			65.9	
11/18/2013	nfss-13-IN-18	1	2	0	50	1	92					1.6	111.0			112.6	
11/18/2013	nfss-13-IN-18	2	2	0	50	0	69					0.0	50.2			50.2	
11/18/2013	nfss-13-IN-18	3	2	0	50	2	76					3.3	68.7			72.0	
11/18/2013	nfss-13-IN-18	4	2	0	50	1	87					1.6	97.8			99.4	
11/18/2013	nfss-13-IN-18	5	2	0	50	0	80					0.0	79.3			79.3	
11/18/2013	nfss-13-IN-18	6	2	0	50	0	80					0.0	79.3			79.3	
11/18/2013	nfss-13-IN-18	7	2	0	50	1	92					1.6	111.0			112.6	
11/18/2013	nfss-13-IN-18	8	2	0	50	0	79					0.0	76.6			76.6	
11/18/2013	nfss-13-IN-18	9	2	0	50	0	96					0.0	121.6			121.6	
11/18/2013	nfss-13-IN-18	10	2	0	50	0	92					0.0	111.0			111.0	
11/19/2013	nfss-13-OT-19	1	1	0	48	2	39					6.5	-47.6			-41.0	
11/19/2013	nfss-13-OT-19	2	1	0	48	0	51					0.0	15.9			15.9	
11/19/2013	nfss-13-IN-20	1	2	0	48	0	93					0.0	118.9			118.9	
11/19/2013	nfss-13-IN-20	2	2	0	48	0	103					0.0	145.3			145.3	
11/19/2013	nfss-13-IN-20	3	2	0	48	0	71					0.0	60.8			60.8	
11/19/2013	nfss-13-IN-20	4	2	0	48	0	85					0.0	97.8			97.8	
11/19/2013	nfss-13-IN-20	5	2	0	48	0	79					0.0	81.9			81.9	
11/19/2013	nfss-13-IN-20	6	2	0	48	0	68					0.0	52.9			52.9	
11/19/2013	nfss-13-IN-20	7	2	0	48	0	85					0.0	97.8			97.8	
11/19/2013	nfss-13-IN-20	8	2	0	48	0	76					0.0	74.0			74.0	
11/19/2013	nfss-13-IN-20	9	2	0	48	1	67					1.6	50.2			51.8	
11/19/2013	nfss-13-IN-20	10	2	0	48	0	92					0.0	116.3			116.3	
11/19/2013	nfss-13-IN-20	11	2	0	48	1	80					1.6	84.6			86.2	
11/19/2013	nfss-13-IN-20	12	2	0	48	0	74					0.0	68.7			68.7	
11/19/2013	nfss-13-IN-20	13	2	0	48	2	80					3.3	84.6			87.8	
11/19/2013	nfss-13-IN-20	14	2	0	48	2	72					3.3	63.4			66.7	
11/19/2013	nfss-13-IN-20	15	2	0	48	2	77					3.3	76.6			79.9	
11/19/2013	nfss-13-IN-21	1	1	0	48	2	47					6.5	-5.3			1.2	
11/19/2013	nfss-13-IN-21	2	1	0	48	1	56					3.3	42.3			45.5	
11/19/2013	nfss-13-IN-21	3	1	0	48	4	50					13.0	10.6			23.6	
11/19/2013	nfss-13-IN-21	4	1	0	48	1	37					3.3	-58.1			-54.9	
11/19/2013	nfss-13-IN-21	5	1	0	48	6	49					19.6	5.3			24.8	
11/19/2013	nfss-13-IN-21	6	1	0	48	1	44					3.3	-21.1			-17.9	
11/20/2013	nfss-13-IN-22	1	2					0	34	1	90			1.6	140.6	142.2	
11/20/2013	nfss-13-IN-22	2	2					0	34	0	84			0.0	125.5	125.5	
11/20/2013	nfss-13-IN-22	3	2					0	34	0	86			0.0	130.5	130.5	
11/20/2013	nfss-13-IN-22	4	2					0	34	2	98			3.2	160.7	163.9	
11/20/2013	nfss-13-IN-22	5	2					0	34	1	91			1.6	143.1	144.7	
11/20/2013	nfss-13-IN-22	6	2					0	34	0	72			0.0	95.4	95.4	
11/20/2013	nfss-13-IN-22	7	2					0	34	2	73			3.2	97.9	101.1	
11/20/2013	nfss-13-IN-22	8	2					0	34	0	79			0.0	113.0	113.0	
11/20/2013	nfss-13-IN-22	9	2					0	34	1	75			1.6	102.9	104.5	
11/20/2013	nfss-13-OT-23	1	1	0	49	4	39					13.0	-52.9			-39.8	
11/20/2013	nfss-13-OT-23	2	1	0	49	0	42					0.0	-37.0			-37.0	
11/20/2013	nfss-13-IN-24	1	2	0	49	0	79					0.0	79.3			79.3	
11/20/2013	nfss-13-IN-24	2	2	0	49	1	92					1.6	113.6			115.3	
11/20/2013	nfss-13-IN-24	3	2	0	49	3	90					4.9	108.3			113.2	
11/20/2013	nfss-13-IN-24	4	2	0	49	0	65					0.0	42.3			42.3	
11/20/2013	nfss-13-IN-24	5	2	0	49	0	74					0.0	66.1			66.1	
11/21/2013	nfss-13-OT-25	1	1	1	32	1	55					0.0	121.6			121.6	
11/21/2013	nfss-13-OT-25	2	1	1	32	1	42					0.0	52.9			52.9	
11/21/2013	nfss-13-IN-26	1	2	1	32	0	72					-1.6	105.7			104.1	
11/21/2013	nfss-13-IN-26	2	2	1	32	1	82					0.0	132.1			132.1	
11/21/2013	nfss-13-IN-26	3	2	1	32	2	94					1.6	163.8			165.5	
11/21/2013	nfss-13-IN-26	4	2	1	32	1	85					0.0	140.1			140.1	
11/21/2013	nfss-13-IN-26	5	2	1	32	0	75					-1.6	113.6			112.0	
11/21/2013	nfss-13-IN-26	6	2	1	32			0	43	0	76	-1.6	-84.6	0.0	82.8	-3.3	
11/21/2013	nfss-13-IN-26	7	2	1	32			0	43	3	78	-1.6	-84.6	4.8	87.9	6.5	

Count Date	Survey Id	Smear #	count time	137607				147736				137607.0		147736.0		Total Activity dpm	Notes
				Background		Smear		Background		Smear		Activity		Activity			
				a cts	bg cts	a cts	bg cts	a cts	bg cts	a cts	bg cts	a dpm	bg dpm	a dpm	bg dpm		
11/21/2013	nfss-13-IN-26	8	2	1	32			0	43	2	85	-1.6	-84.6	3.2	105.4	22.5	
11/21/2013	nfss-13-IN-26	9	2	1	32			0	43	0	73	-1.6	-84.6	0.0	75.3	-10.9	
11/21/2013	nfss-13-IN-26	10	2	1	32			0	43	2	85	-1.6	-84.6	3.2	105.4	22.5	
11/21/2013	nfss-13-IN-27	1	2	1	32	0	97					-1.6	171.8			170.1	
11/21/2013	nfss-13-IN-27	2	2	1	32	0	95					-1.6	166.5			164.9	
11/21/2013	nfss-13-IN-27	3	2	1	32	1	77					0.0	118.9			118.9	
11/21/2013	nfss-13-IN-27	4	2	1	32	1	91					0.0	155.9			155.9	
11/21/2013	nfss-13-IN-27	5	2	1	32	0	86					-1.6	142.7			141.1	
11/21/2013	nfss-13-IN-27	6	2	1	32	0	83					-1.6	134.8			133.1	
11/21/2013	nfss-13-IN-27	7	2	1	32	0	69					-1.6	97.8			96.1	
11/21/2013	nfss-13-IN-27	8	2	1	32	0	78					-1.6	121.6			119.9	
11/21/2013	nfss-13-IN-27	9	2	1	32	0	62					-1.6	79.3			77.6	
11/21/2013	nfss-13-IN-27	10	2	1	32	0	78					-1.6	121.6			119.9	
11/22/2013	nfss-13-OT-29	1	1	0	45	0	43					0.0	-10.6			-10.6	
11/22/2013	nfss-13-OT-29	2	1	0	45	0	39					0.0	-31.7			-31.7	
11/25/2013	nfss-13-OT-30	403	1	0	39	0	38					0.0	-5.3			-5.3	
11/25/2013	nfss-13-OT-30	463	1	0	39	0	44					0.0	26.4			26.4	
11/26/2013	nfSS-13-IN-32	1	2	0	34	2	82					3.3	126.8			130.1	
11/26/2013	nfSS-13-IN-32	2	2	0	34	1	85					1.6	134.8			136.4	
11/26/2013	nfSS-13-IN-32	3	2	0	34	3	94					4.9	158.6			163.4	
11/26/2013	nfSS-13-IN-32	4	2	0	34	4	88					6.5	142.7			149.2	
11/26/2013	nfSS-13-IN-32	5	2	0	34	0	70					0.0	95.1			95.1	
11/26/2013	nfSS-13-IN-32	6	2	0	34	1	92					1.6	153.3			154.9	
11/26/2013	nfSS-13-IN-32	7	2	0	34	2	101					3.3	177.1			180.3	
11/26/2013	nfSS-13-IN-32	8	2	0	34	0	87					0.0	140.1			140.1	
11/26/2013	nfSS-13-IN-32	9	2	0	34	2	89					3.3	145.3			148.6	
11/26/2013	nfSS-13-IN-32	10	2	0	34	3	81					4.9	124.2			129.1	
11/26/2013	nfSS-13-OT-33	1	1	0	34	0	40					0.0	31.7			31.7	
11/26/2013	nfSS-13-OT-34	488	1	0	34	1	55					3.3	111.0			114.2	
11/26/2013	nfSS-13-OT-34	500	1	0	34	0	43					0.0	47.6			47.6	
11/27/2013	nfSS-13-OT-35	405	1	1	51	1	40					0.0	-58.1			-58.1	
11/27/2013	nfSS-13-OT-35	513	1	1	51	1	49					0.0	-10.6			-10.6	
11/27/2013	nfSS-13-OT-35	462	1	1	51	0	42					-3.3	-47.6			-50.8	
12/2/2013	nfss-13-OT-37	1	1	0	48	1	45					3.3	-15.9			-12.6	
12/2/2013	nfss-13-OT-37	2	1	0	48	0	32					0.0	-84.6			-84.6	
12/3/2013	nfss-13-OT-39	1	1	0	46	0	47					0.0	5.3			5.3	
12/3/2013	nfss-13-OT-39	2	1	0	46	0	33					0.0	-68.7			-68.7	
12/3/2013	nfss-13-OT-39	3	1	0	46	0	48					0.0	10.6			10.6	
12/4/2013	nfss-13-OT-41	1	1	0	35	0	26					0.0	-47.6			-47.6	
12/4/2013	nfss-13-OT-41	2	1	0	35	0	32					0.0	-15.9			-15.9	
12/4/2013	nfss-13-OT-41	3	1	0	35	0	40					0.0	26.4			26.4	
12/5/2013	nfss-13-OT-43	1	1	0	34	0	38					0.0	21.1			21.1	
12/5/2013	nfss-13-OT-43	2	1	0	34	0	41					0.0	37.0			37.0	
12/5/2013	nfss-13-OT-43	3	1	0	34	0	34					0.0	0.0			0.0	
12/5/2013	nfss-13-IN-45	523	2	1	32	0	63					-1.6	81.9			80.3	
12/5/2013	nfss-13-IN-45	524	2	1	32	0	84					-1.6	137.4			135.8	
12/5/2013	nfss-13-IN-45	525	2	1	32	1	92					0.0	158.6			158.6	
12/5/2013	nfss-13-IN-45	526	2	1	32	0	78					-1.6	121.6			119.9	
12/5/2013	nfss-13-IN-45	527	2	1	32	0	92					-1.6	158.6			156.9	
12/5/2013	nfss-13-IN-45	528	2	1	32	0	89					-1.6	150.6			149.0	
12/5/2013	nfss-13-IN-45	529	2	1	32	0	78					-1.6	121.6			119.9	
12/5/2013	nfss-13-IN-45	530	2	1	32	0	92					-1.6	158.6			156.9	
12/5/2013	nfss-13-IN-45	531	2	1	32	0	78					-1.6	121.6			119.9	
12/5/2013	nfss-13-IN-45	532	2	1	32	0	89					-1.6	150.6			149.0	
12/6/2013	nfss-13-OT-46	509	1	1	32	0	49					-3.3	89.8			86.6	
12/6/2013	nfss-13-OT-46	510	1	1	32	1	42					0.0	52.9			52.9	
12/6/2013	nfss-13-OT-46	519	1	1	32	0	40					-3.3	42.3			39.0	
12/6/2013	nfss-13-OT-47	1	2	1	32	0	82					-1.6	132.1			130.5	
12/6/2013	nfss-13-OT-47	2	2	1	32	1	94					0.0	163.8			163.8	
12/6/2013	nfss-13-OT-47	3	2	1	32	1	70					0.0	100.4			100.4	
12/6/2013	nfss-13-OT-47	4	2	1	32	1	77					0.0	118.9			118.9	
12/6/2013	nfss-13-OT-47	5	2	1	32	2	78					1.6	121.6			123.2	
12/6/2013	nfss-13-OT-47	6	2	1	32	1	64					0.0	84.6			84.6	
12/6/2013	nfss-13-OT-47	7	2	1	32	1	85					0.0	140.1			140.1	
12/6/2013	nfss-13-OT-47	8	2	1	32	1	79					0.0	124.2			124.2	
12/6/2013	nfss-13-OT-47	9	2	1	32	1	88					0.0	148.0			148.0	
12/6/2013	nfss-13-OT-47	10	2	1	32	1	90					0.0	153.3			153.3	

Count Date	Survey Id	Smear #	count time	137607				147736				137607.0		147736.0		Total Activity dpm	Notes
				Background		Smear		Background		Smear		Activity		Activity			
				a cts	bg cts	a cts	bg cts	a cts	bg cts	a cts	bg cts	a dpm	bg dpm	a dpm	bg dpm		
12/6/2013	nfss-13-OT-48	1	2	1	32	2	76					1.6	116.3			117.9	
12/6/2013	nfss-13-OT-48	2	2	1	32	1	74					0.0	111.0			111.0	
12/6/2013	nfss-13-OT-48	3	2	1	32	0	82					-1.6	132.1			130.5	
12/6/2013	nfss-13-OT-48	4	2	1	32	1	79					0.0	124.2			124.2	
12/6/2013	nfss-13-OT-48	5	2	1	32	2	89					1.6	150.6			152.3	
12/6/2013	nfss-13-OT-48	6	2	1	32	0	88					-1.6	148.0			146.4	
12/6/2013	nfss-13-OT-48	7	2	1	32	2	99					1.6	177.1			178.7	
12/6/2013	nfss-13-OT-48	8	2	1	32	3	88					3.3	148.0			151.2	
12/6/2013	nfss-13-OT-48	9	2	1	32	0	76					-1.6	116.3			114.6	
12/6/2013	nfss-13-OT-48	10	2	1	32	2	91					1.6	155.9			157.5	
12/6/2013	nfss-13-OT-49	1	2	1	32	0	77					-1.6	118.9			117.3	
12/6/2013	nfss-13-OT-49	2	2	1	32	0	66					-1.6	89.8			88.2	
12/6/2013	nfss-13-OT-49	3	2	1	32	1	66					0.0	89.8			89.8	
12/6/2013	nfss-13-OT-49	4	2	1	32	1	73					0.0	108.3			108.3	
12/6/2013	nfss-13-OT-49	5	2	1	32	1	77					0.0	118.9			118.9	
12/6/2013	nfss-13-OT-49	6	2	1	32	0	73					-1.6	108.3			106.7	
12/6/2013	nfss-13-OT-49	7	2	1	32	0	70					-1.6	100.4			98.8	
12/6/2013	nfss-13-OT-49	8	2	1	32	2	84					1.6	137.4			139.0	
12/6/2013	nfss-13-OT-49	9	2	1	32	0	85					-1.6	140.1			138.4	
12/6/2013	nfss-13-OT-49	10	2	1	32	0	75					-1.6	113.6			112.0	
12/6/2013	nfss-13-OT-49	11	2	1	32	0	67					-1.6	92.5			90.9	
12/6/2013	nfss-13-OT-49	12	2	1	32	0	79					-1.6	124.2			122.6	
12/9/2013	nfss-13-OT-50	523	1	1	39	0	53					-3.3	74.0			70.7	
12/10/2013	nfss-13-OT-51	1	2	1	27	3	82					3.3	145.3			148.6	
12/10/2013	nfss-13-OT-51	2	2	1	27	1	80					0.0	140.1			140.1	
12/10/2013	nfss-13-OT-51	3	2	1	27	2	77					1.6	132.1			133.8	
12/10/2013	nfss-13-OT-51	4	2	1	27	1	76					0.0	129.5			129.5	
12/10/2013	nfss-13-OT-51	5	2	1	27	2	84					1.6	150.6			152.3	
12/10/2013	nfss-13-OT-51	6	2	1	27	0	81					-1.6	142.7			141.1	
12/10/2013	nfss-13-OT-51	7	2	1	27	2	91					1.6	169.1			170.8	
12/10/2013	nfss-13-OT-51	8	2	1	27	1	93					0.0	174.4			174.4	
12/10/2013	nfss-13-OT-51	9	2	1	27	0	75					-1.6	126.8			125.2	
12/10/2013	nfss-13-OT-51	10	2	1	27	1	72					0.0	118.9			118.9	
12/10/2013	nfss-13-OT-51	11	2					0	33	0	93			0.0	150.6	150.6	
12/10/2013	nfss-13-OT-51	12	2					0	33	2	83			3.2	125.5	128.7	
12/10/2013	nfss-13-OT-51	13	2					0	33	0	83			0.0	125.5	125.5	
12/10/2013	nfss-13-OT-51	14	2					0	33	0	77			0.0	110.5	110.5	
12/10/2013	nfss-13-OT-51	15	2					0	33	0	81			0.0	120.5	120.5	
12/10/2013	nfss-13-OT-51	16	2					0	33	3	78			4.8	113.0	117.8	
12/10/2013	nfss-13-OT-51	17	2					0	33	3	82			4.8	123.0	127.8	
12/10/2013	nfss-13-OT-51	18	2					0	33	1	98			1.6	163.2	164.8	
12/10/2013	nfss-13-OT-51	19	2					0	33	1	87			1.6	135.6	137.2	
12/10/2013	nfss-13-OT-51	20	2					0	33	3	77			4.8	110.5	115.3	
12/10/2013	nfss-13-OT-52	526	1	1	27	0	49					-3.3	116.3			113.0	
12/10/2013	nfss-13-OT-52	531	1	1	27	0	32					-3.3	26.4			23.2	
12/10/2013	nfss-13-OT-53	1	2	1	27	1	81					0.0	142.7			142.7	
12/10/2013	nfss-13-OT-53	2	2	1	27	0	84					-1.6	150.6			149.0	
12/10/2013	nfss-13-OT-53	3	2	1	27	3	75					3.3	126.8			130.1	
12/10/2013	nfss-13-OT-53	4	2	1	27	0	80					-1.6	140.1			138.4	
12/10/2013	nfss-13-OT-53	5	2	1	27	0	81					-1.6	142.7			141.1	
12/10/2013	nfss-13-OT-53	6	2	1	27	0	78					-1.6	134.8			133.1	
12/10/2013	nfss-13-OT-53	7	2	1	27	0	72					-1.6	118.9			117.3	
12/10/2013	nfss-13-OT-53	8	2	1	27	0	64					-1.6	97.8			96.1	
12/10/2013	nfss-13-OT-53	9	2	1	27	0	93					-1.6	174.4			172.8	
12/10/2013	nfss-13-OT-53	10	2	1	27	0	87					-1.6	158.6			156.9	
12/10/2013	nfss-13-OT-53	11	2					0	33	0	84			0.0	128.0	128.0	
12/10/2013	nfss-13-OT-53	12	2					0	33	0	66			0.0	82.8	82.8	
12/10/2013	nfss-13-OT-53	13	2					0	33	1	78			1.6	113.0	114.6	
12/10/2013	nfss-13-OT-53	14	2					0	33	0	86			0.0	133.1	133.1	
12/10/2013	nfss-13-OT-53	15	2					0	33	0	94			0.0	153.1	153.1	
12/10/2013	nfss-13-OT-53	16	2					0	33	2	74			3.2	102.9	106.2	
12/10/2013	nfss-13-OT-53	17	2					0	33	2	81			3.2	120.5	123.7	
12/10/2013	nfss-13-OT-53	18	2					0	33	0	77			0.0	110.5	110.5	
12/10/2013	nfss-13-OT-53	19	2					0	33	0	76			0.0	107.9	107.9	
12/10/2013	nfss-13-OT-53	20	2	1	27	2	82					1.6	145.3			147.0	
12/10/2013	nfss-13-OT-53	21	2	1	27	1	83					0.0	148.0			148.0	
12/10/2013	nfss-13-OT-53	22	2					0	33	0	77			0.0	110.5	110.5	

Count Date	Survey Id	Smear #	count time	137607				147736				137607.0		147736.0		Total Activity dpm	Notes
				Background		Smear		Background		Smear		Activity		Activity			
				a cts	bg cts	a cts	bg cts	a cts	bg cts	a cts	bg cts	a dpm	bg dpm	a dpm	bg dpm		
12/10/2013	nfss-13-OT-53	23	2					0	33	0	70			0.0	92.9	92.9	
12/11/2013	nfss-13-OT-53	24	2	1	44	0	91					-1.6	124.2			122.6	
12/11/2013	nfss-13-OT-53	25	2	1	44	1	81					0.0	97.8			97.8	
12/11/2013	nfss-13-OT-53	26	2	1	44	0	83					-1.6	103.1			101.4	
12/11/2013	nfss-13-OT-53	27	2	1	44	1	78					0.0	89.8			89.8	
12/11/2013	nfss-13-OT-53	28	2	1	44	2	87					1.6	113.6			115.3	
12/11/2013	nfss-13-OT-53	29	2	1	44	2	100					1.6	148.0			149.6	
12/11/2013	nfss-13-OT-53	30	2	1	44	4	85					4.9	108.3			113.2	
12/11/2013	nfss-13-OT-53	31	2	1	44	1	87					0.0	113.6			113.6	
12/11/2013	nfss-13-OT-53	32	2	1	44	2	82					1.6	100.4			102.0	
12/11/2013	nfss-13-OT-54	1	2	1	44	0	78					-1.6	89.8			88.2	
12/11/2013	nfss-13-OT-54	2	2	1	44	1	78					0.0	89.8			89.8	
12/11/2013	nfss-13-OT-54	3	2	1	44	1	96					0.0	137.4			137.4	
12/11/2013	nfss-13-OT-54	4	2	1	44	2	74					1.6	79.3			80.9	
12/11/2013	nfss-13-OT-54	5	2	1	44	1	82					0.0	100.4			100.4	
12/11/2013	nfss-13-OT-54	6	2	1	44	0	99					-1.6	145.3			143.7	
12/11/2013	nfss-13-OT-54	7	2	1	44	2	89					1.6	118.9			120.5	
12/11/2013	nfss-13-OT-54	8	2	1	44	1	73					0.0	76.6			76.6	
12/11/2013	nfss-13-OT-54	9	2	1	44	2	79					1.6	92.5			94.1	
12/11/2013	nfss-13-OT-54	10	2	1	44	0	95					-1.6	134.8			133.1	
12/11/2013	nfss-13-OT-55	529	1	1	44	0	35					-3.3	-47.6			-50.8	
12/11/2013	nfss-13-OT-55	530	1	1	44	0	43					-3.3	-5.3			-8.5	
12/12/2013	nfss-13-OT-56	525	1	0	42	0	42					0.0	0.0			0.0	
12/12/2013	nfss-13-OT-56	528	1	0	42	0	46					0.0	21.1			21.1	
12/13/2013	NFSS-13-OT-57	527	1	1	42	0	47					-3.3	26.4			23.2	
12/13/2013	NFSS-13-OT-57	524	1	1	42	1	45					0.0	15.9			15.9	
12/13/2013	NFSS-13-OT-58	1	2	0	81	0	96					0.0	39.6			39.6	
12/13/2013	NFSS-13-RT-59	1	2	0	81	0	82					0.0	2.6			2.6	
12/13/2013	NFSS-13-RT-59	2	2	0	81	0	83					0.0	5.3			5.3	
12/13/2013	NFSS-13-RT-59	3	2	0	81	1	86					1.6	13.2			14.8	
12/13/2013	NFSS-13-RT-59	4	2	0	81	0	88					0.0	18.5			18.5	
12/16/2013	NFSS-13-OT-60	571	1	1	32	0	42					-3.3	52.9			49.6	
12/17/2013	NFSS-13-OT-61	470	1	0	31	0	26					0.0	-26.4			-26.4	
12/17/2013	NFSS-13-OT-61	523	1	0	31	1	48					3.3	89.8			93.1	
12/18/2013	NFSS-13-OT-62	414	1	0	52	0	34					0.0	-95.1			-95.1	
12/19/2013	NFSS-13-OT-63	533	2	0	28	0	47					0.0	50.2			50.2	
12/19/2013	NFSS-13-OT-63	534	2	0	28	0	30					0.0	5.3			5.3	
12/19/2013	NFSS-13-OT-63	535	2	0	28	0	40					0.0	31.7			31.7	
12/19/2013	NFSS-13-OT-63	536	2	0	28	1	30					1.6	5.3			6.9	
12/19/2013	NFSS-13-OT-64	533	1	0	28	1	55					3.3	142.7			146.0	
12/19/2013	NFSS-13-OT-64	533	1	0	28	2	41					6.5	68.7			75.2	
12/19/2013	NFSS-13-OT-64	536	1	0	28	1	52					3.3	126.8			130.1	
12/19/2013	NFSS-13-OT-65	1	2	0	28	1	68					1.6	105.7			107.3	
12/19/2013	NFSS-13-OT-65	2	2	0	28	1	72					1.6	116.3			117.9	
12/19/2013	NFSS-13-OT-65	3	2	0	28	0	83					0.0	145.3			145.3	
12/19/2013	NFSS-13-OT-65	4	2	0	28	0	87					0.0	155.9			155.9	
12/19/2013	NFSS-13-OT-65	5	2	0	28	1	78					1.6	132.1			133.8	
12/19/2013	NFSS-13-OT-65	6	2	0	28	1	96					1.6	179.7			181.3	
12/19/2013	NFSS-13-OT-65	7	2	0	28	1	80					1.6	137.4			139.0	
12/19/2013	NFSS-13-OT-65	8	2	0	28	1	79					1.6	134.8			136.4	
12/19/2013	NFSS-13-OT-65	9	2	0	28	1	83					1.6	145.3			147.0	
12/19/2013	NFSS-13-OT-65	10	2	0	28	2	80					3.3	137.4			140.7	

June-July 2014 Smear Count Results

Count Date	Survey Id	Smear #	count time	Instrument 121870							Notes
				Background		Smear		Activity		Total Activity	
				α cts	βγ cts	α cts	βγ cts	α dpm	βγ dpm		
6/16/2014	NFSS14IN067	1	2	0	92	1	89	1.5	-7.4	-5.9	
6/16/2014	NFSS14IN067	2	2	0	92	0	78	0.0	-34.3	-34.3	
6/16/2014	NFSS14IN067	3	2	0	92	0	85	0.0	-17.2	-17.2	
6/16/2014	NFSS14IN067	4	2	0	92	0	84	0.0	-19.6	-19.6	
6/16/2014	NFSS14IN067	5	2	0	92	1	95	1.5	7.4	8.8	
6/16/2014	NFSS14IN067	6	2	0	92	1	97	1.5	12.3	13.7	
6/16/2014	NFSS14IN067	7	2	0	92	0	88	0.0	-9.8	-9.8	
6/16/2014	NFSS14IN067	8	2	0	92	1	73	1.5	-46.6	-45.1	
6/16/2014	NFSS14IN067	9	2	0	92	0	78	0.0	-34.3	-34.3	
6/16/2014	NFSS14IN067	10	2	0	92	0	77	0.0	-36.8	-36.8	
6/16/2014	NFSS14IN067	11	2	0	92	0	66	0.0	-63.7	-63.7	
6/16/2014	NFSS14IN068	1	2	0	92	0	68	0.0	-58.8	-58.8	
6/16/2014	NFSS14IN068	2	2	0	92	0	70	0.0	-53.9	-53.9	
6/16/2014	NFSS14IN068	3	2	0	92	0	76	0.0	-39.2	-39.2	
6/17/2014	NFSS14IN069	1	2	1	77	1	78	0.0	2.5	2.5	
6/17/2014	NFSS14IN069	2	2	1	77	0	78	-1.5	2.5	1.0	
6/17/2014	NFSS14IN069	3	2	1	77	2	76	1.5	-2.5	-1.0	
6/17/2014	NFSS14IN069	4	2	1	77	0	75	-1.5	-4.9	-6.4	
6/17/2014	NFSS14IN069	5	2	1	77	1	85	0.0	19.6	19.6	
6/17/2014	NFSS14IN069	6	2	1	77	0	70	-1.5	-17.2	-18.6	
6/17/2014	NFSS14IN069	7	2	1	77	0	71	-1.5	-14.7	-16.2	
6/17/2014	NFSS14IN069	8	2	1	77	0	89	-1.5	29.4	27.9	
6/18/2014	NFSS14OT70	602	2	1	84	0	70	-1.5	-34.3	-35.8	
6/19/2014	NFSS14OT71	601	2	2	81	0	63	-3.0	-44.1	-47.1	
6/19/2014	NFSS14OT71	606	2	2	81	0	82	-3.0	2.5	-0.5	
6/19/2014	NFSS14OT71	604	2	2	81	1	60	-1.5	-51.5	-52.9	
6/19/2014	NFSS14IN72	609	2	2	81	0	74	-3.0	-17.2	-20.1	
6/19/2014	NFSS14IN72	610	2	2	81	0	86	-3.0	12.3	9.3	
6/19/2014	NFSS14IN72	608	2	2	81	4	67	3.0	-34.3	-31.4	
6/20/2014	NFSS14IN73	611	2	1	75	0	73	-1.5	-4.9	-6.4	
6/20/2014	NFSS14IN73	612	2	1	75	0	78	-1.5	7.4	5.9	
6/20/2014	NFSS14OT74	603	2	1	75	0	82	-1.5	17.2	15.7	
6/20/2014	NFSS14OT74	607	2	1	75	0	90	-1.5	36.8	35.3	
6/23/2014	NFSS14OT75	608	2	0	74	0	70	0.0	-9.8	-9.8	
6/23/2014	NFSS14OT75	605	2	0	74	0	87	0.0	31.9	31.9	
6/24/2014	NFSS14OT77	612	2	0	79	6	94	8.9	36.8	45.6	Recount
6/24/2014	NFSS14OT77	612	2	0	79	1	80	1.5	2.5	3.9	Recount
6/24/2014	NFSS14IN76	613	2	0	79	0	77	0.0	-4.9	-4.9	
6/24/2014	NFSS14IN76	614	2	0	79	1	77	1.5	-4.9	-3.4	
6/24/2014	NFSS14IN76	615	2	0	79	1	69	1.5	-24.5	-23.0	
6/24/2014	NFSS14IN76	616	2	0	79	0	94	0.0	36.8	36.8	
6/25/2014	NFSS14IN80	617	2	0	72	0	84	0.0	29.4	29.4	
6/25/2014	NFSS14IN80	618	2	0	72	0	83	0.0	27.0	27.0	
6/25/2014	NFSS14IN80	619	2	0	72	0	91	0.0	46.6	46.6	
6/25/2014	NFSS14IN80	620	2	0	72	0	79	0.0	17.2	17.2	
6/28/2014	NFSS14IN83	1	2	2	94	0	72	-3.0	-53.9	-56.9	
6/28/2014	NFSS14IN83	2	2	2	94	0	74	-3.0	-49.0	-52.0	
6/28/2014	NFSS14IN83	3	2	2	94	0	62	-3.0	-78.4	-81.4	

Count Date	Survey Id	Smear #	count time	Instrument 121870							Notes
				Background		Smear		Activity		Total Activity	
				α cts	βγ cts	α cts	βγ cts	α dpm	βγ dpm		
6/28/2014	NFSS14IN83	4	2	2	94	2	80	0.0	-34.3	-34.3	
6/28/2014	NFSS14IN83	5	2	2	94	1	66	-1.5	-68.6	-70.1	
6/28/2014	NFSS14IN83	6	2	2	94	1	76	-1.5	-44.1	-45.6	
6/28/2014	NFSS14IN83	7	2	2	94	0	74	-3.0	-49.0	-52.0	
6/28/2014	NFSS14IN83	8	2	2	94	0	79	-3.0	-36.8	-39.7	
6/28/2014	NFSS14IN83	9	2	2	94	2	85	0.0	-22.1	-22.1	
6/28/2014	NFSS14IN83	10	2	2	94	0	71	-3.0	-56.4	-59.3	
6/28/2014	NFSS14IN83	11	2	2	94	0	73	-3.0	-51.5	-54.4	
6/28/2014	NFSS14IN83	12	2	2	94	0	68	-3.0	-63.7	-66.7	
6/28/2014	NFSS14IN83	13	2	2	94	2	75	0.0	-46.6	-46.6	
6/28/2014	NFSS14IN84	1	2	2	94	0	76	-3.0	-44.1	-47.1	
6/28/2014	NFSS14IN84	2	2	2	94	1	79	-1.5	-36.8	-38.2	
6/28/2014	NFSS14IN84	3	2	2	94	1	77	-1.5	-41.7	-43.1	
6/28/2014	NFSS14IN84	4	2	2	94	0	88	-3.0	-14.7	-17.7	
6/28/2014	NFSS14IN84	5	2	2	94	1	79	-1.5	-36.8	-38.2	
6/28/2014	NFSS14IN84	6	2	2	94	0	71	-3.0	-56.4	-59.3	
6/28/2014	NFSS14IN84	7	2	2	94	0	81	-3.0	-31.9	-34.8	
6/28/2014	NFSS14IN84	8	2	2	94	0	82	-3.0	-29.4	-32.4	
6/26/2014	NFSS14IN81	609	2	2	94	0	69	-3.0	-61.3	-64.2	
6/26/2014	NFSS14IN81	618	2	2	94	1	86	-1.5	-19.6	-21.1	
6/26/2014	NFSS14IN82	617	2	2	94	0	86	-3.0	-19.6	-22.6	
6/26/2014	NFSS14IN82	620	2	2	94	1	86	-1.5	-19.6	-21.1	
6/27/2014	NFSS14IN83	1	2	1	94	0	72	-1.5	-53.9	-55.4	
6/27/2014	NFSS14IN83	2	2	1	94	0	74	-1.5	-49.0	-50.5	
6/27/2014	NFSS14IN83	3	2	1	94	0	62	-1.5	-78.4	-79.9	
6/27/2014	NFSS14IN83	4	2	1	94	2	80	1.5	-34.3	-32.8	
6/27/2014	NFSS14IN83	5	2	1	94	1	66	0.0	-68.6	-68.6	
6/27/2014	NFSS14IN83	6	2	1	94	1	76	0.0	-44.1	-44.1	
6/27/2014	NFSS14IN83	7	2	1	94	0	74	-1.5	-49.0	-50.5	
6/27/2014	NFSS14IN83	8	2	1	94	0	79	-1.5	-36.8	-38.2	
6/27/2014	NFSS14IN83	9	2	1	94	2	85	1.5	-22.1	-20.6	
6/27/2014	NFSS14IN83	10	2	1	94	0	71	-1.5	-56.4	-57.8	
6/27/2014	NFSS14IN83	11	2	1	94	0	73	-1.5	-51.5	-52.9	
6/27/2014	NFSS14IN83	12	2	1	94	0	68	-1.5	-63.7	-65.2	
6/27/2014	NFSS14IN83	13	2	1	94	2	75	1.5	-46.6	-45.1	
6/27/2014	NFSS14IN84	1	2	1	94	0	76	-1.5	-44.1	-45.6	
6/27/2014	NFSS14IN84	2	2	1	94	1	79	0.0	-36.8	-36.8	
6/27/2014	NFSS14IN84	3	2	1	94	1	77	0.0	-41.7	-41.7	
6/27/2014	NFSS14IN84	4	2	1	94	0	88	-1.5	-14.7	-16.2	
6/27/2014	NFSS14IN84	5	2	1	94	1	79	0.0	-36.8	-36.8	
6/27/2014	NFSS14IN84	6	2	1	94	0	71	-1.5	-56.4	-57.8	
6/27/2014	NFSS14IN84	7	2	1	94	0	81	-1.5	-31.9	-33.3	
6/27/2014	NFSS14IN84	8	2	1	94	0	82	-1.5	-29.4	-30.9	
6/30/2014	NFSS14IN85	621	2	0	78	0	88	0.0	24.5	24.5	
6/30/2014	NFSS14IN85	622	2	0	78	0	90	0.0	29.4	29.4	
6/30/2014	NFSS14IN85	623	2	0	78	0	74	0.0	-9.8	-9.8	
6/30/2014	NFSS14IN85	624	2	0	78	0	67	0.0	-27.0	-27.0	
6/30/2014	NFSS14IN85	625	2	0	78	1	74	1.5	-9.8	-8.3	

Count Date	Survey Id	Smear #	count time	Instrument 121870							Notes
				Background		Smear		Activity		Total Activity	
				α cts	βγ cts	α cts	βγ cts	α dpm	βγ dpm		
6/30/2014	NFSS14IN85	626	2	0	78	0	68	0.0	-24.5	-24.5	
7/1/2014	NFSS14IN86	1	2	0	93	0	77	0.0	-39.2	-39.2	
7/1/2014	NFSS14IN86	2	2	0	93	0	72	0.0	-51.5	-51.5	
7/1/2014	NFSS14IN86	3	2	0	93	0	79	0.0	-34.3	-34.3	
7/1/2014	NFSS14IN87	616	2	0	93	1	89	1.5	-9.8	-8.3	
7/1/2014	NFSS14IN87	619	2	0	93	0	82	0.0	-27.0	-27.0	
7/1/2014	NFSS14IN87	620	2	0	93	1	89	1.5	-9.8	-8.3	
7/1/2014	NFSS14IN88	1	2	0	93	0	77	0.0	-39.2	-39.2	
7/1/2014	NFSS14IN88	2	2	0	93	0	69	0.0	-58.8	-58.8	
7/1/2014	NFSS14IN88	3	2	0	93	0	71	0.0	-53.9	-53.9	
7/1/2014	NFSS14IN88	4	2	0	93	1	76	1.5	-41.7	-40.2	
7/1/2014	NFSS14IN88	5	2	0	93	0	80	0.0	-31.9	-31.9	
7/1/2014	NFSS14IN88	6	2	0	93	0	90	0.0	-7.4	-7.4	
7/1/2014	NFSS14IN88	7	2	0	93	1	87	1.5	-14.7	-13.2	
7/1/2014	NFSS14IN88	8	2	0	93	0	62	0.0	-76.0	-76.0	
7/1/2014	NFSS14IN88	9	2	0	93	0	86	0.0	-17.2	-17.2	
7/1/2014	NFSS14IN88	10	2	0	93	0	62	0.0	-76.0	-76.0	
7/1/2014	NFSS14IN88	11	2	0	93	0	72	0.0	-51.5	-51.5	
7/1/2014	NFSS14IN88	12	2	0	93	0	80	0.0	-31.9	-31.9	
7/1/2014	NFSS14IN88	13	2	0	93	0	79	0.0	-34.3	-34.3	
7/1/2014	NFSS14IN88	14	2	0	93	0	72	0.0	-51.5	-51.5	
7/1/2014	NFSS14IN88	15	2	0	93	0	88	0.0	-12.3	-12.3	
7/1/2014	NFSS14IN88	16	2	0	93	0	80	0.0	-31.9	-31.9	
7/2/2014	NFSS14IN89	1	2	0	80	0	93	0.0	31.9	31.9	
7/2/2014	NFSS14IN89	2	2	0	80	0	95	0.0	36.8	36.8	
7/2/2014	NFSS14IN89	3	2	0	80	1	83	1.5	7.4	8.8	
7/2/2014	NFSS14IN89	4	2	0	80	0	77	0.0	-7.4	-7.4	
7/2/2014	NFSS14IN89	5	2	0	80	0	89	0.0	22.1	22.1	
7/2/2014	NFSS14IN89	6	2	0	80	0	71	0.0	-22.1	-22.1	
7/2/2014	NFSS14IN89	7	2	0	80	0	88	0.0	19.6	19.6	
7/2/2014	NFSS14IN89	8	2	0	80	0	85	0.0	12.3	12.3	
7/2/2014	NFSS14IN89	9	2	0	80	0	84	0.0	9.8	9.8	
7/2/2014	NFSS14IN89	10	2	0	80	1	78	1.5	-4.9	-3.4	
7/2/2014	NFSS14IN90	1	2	0	80	0	72	0.0	-19.6	-19.6	
7/2/2014	NFSS14IN91	2	2	0	80	0	99	0.0	46.6	46.6	
7/2/2014	NFSS14IN91	3	2	0	80	0	66	0.0	-34.3	-34.3	
7/2/2014	NFSS14IN92	610	2	0	80	0	97	0.0	41.7	41.7	
7/2/2014	NFSS14IN92	615	2	0	80	0	80	0.0	0.0	0.0	
7/2/2014	NFSS14IN92	623	2	0	80	0	88	0.0	19.6	19.6	
7/2/2014	NFSS14IN92	624	2	0	80	0	84	0.0	9.8	9.8	
7/2/2014	NFSS14IN93	1	2	0	80	1	78	1.5	-4.9	-3.4	
7/2/2014	NFSS14IN93	2	2	0	80	0	75	0.0	-12.3	-12.3	
7/2/2014	NFSS14IN93	3	2	0	80	0	92	0.0	29.4	29.4	
7/2/2014	NFSS14IN93	4	2	0	80	0	82	0.0	4.9	4.9	
7/2/2014	NFSS14IN93	5	2	0	80	0	65	0.0	-36.8	-36.8	
7/2/2014	NFSS14IN93	6	2	0	80	1	64	1.5	-39.2	-37.7	
7/2/2014	NFSS14IN93	7	2	0	80	1	78	1.5	-4.9	-3.4	
7/2/2014	NFSS14IN93	8	2	0	80	0	74	0.0	-14.7	-14.7	

June-July 2014 Smear Count Results

Count Date	Survey Id	Smear #	count time	Instrument 121870							Notes
				Background		Smear		Activity		Total Activity	
				α cts	βγ cts	α cts	βγ cts	α dpm	βγ dpm		
7/2/2014	NFSS14IN93	9	2	0	80	0	70	0.0	-24.5	-24.5	
7/2/2014	NFSS14IN93	10	2	0	80	0	91	0.0	27.0	27.0	
7/2/2014	NFSS14IN93	11	2	0	80	1	96	1.5	39.2	40.7	
7/2/2014	NFSS14IN93	12	2	0	80	0	81	0.0	2.5	2.5	
7/2/2014	NFSS14IN93	13	2	0	80	1	86	1.5	14.7	16.2	
7/2/2014	NFSS14IN93	14	2	0	80	0	87	0.0	17.2	17.2	
7/7/2014	NFSS14OT95	1	2	0	78	2	72	3.0	-14.7	-11.8	
7/7/2014	NFSS14OT95	2	2	0	78	0	82	0.0	9.8	9.8	
7/7/2014	NFSS14OT95	3	2	0	78	0	74	0.0	-9.8	-9.8	
7/7/2014	NFSS14OT95	4	2	0	78	0	79	0.0	2.5	2.5	
7/7/2014	NFSS14OT95	5	2	0	78	1	70	1.5	-19.6	-18.1	
7/7/2014	NFSS14OT95	6	2	0	78	1	68	1.5	-24.5	-23.0	
7/7/2014	NFSS14OT95	7	2	0	78	1	64	1.5	-34.3	-32.8	
7/7/2014	NFSS14OT95	8	2	0	78	1	75	1.5	-7.4	-5.9	
7/7/2014	NFSS14OT95	9	2	0	78	1	70	1.5	-19.6	-18.1	
7/7/2014	NFSS14OT95	10	2	0	78	1	76	1.5	-4.9	-3.4	
7/7/2014	NFSS14OT95	11	2	0	78	0	78	0.0	0.0	0.0	
7/7/2014	NFSS14OT95	12	2	0	78	0	76	0.0	-4.9	-4.9	
7/7/2014	NFSS14OT95	13	2	0	78	1	106	1.5	68.6	70.1	
7/7/2014	NFSS14OT95	14	2	0	78	0	81	0.0	7.4	7.4	
7/7/2014	NFSS14OT95	15	2	0	78	0	72	0.0	-14.7	-14.7	
7/7/2014	NFSS14OT95	16	2	0	78	1	75	1.5	-7.4	-5.9	

Appendix E-5-1

GWS Maps

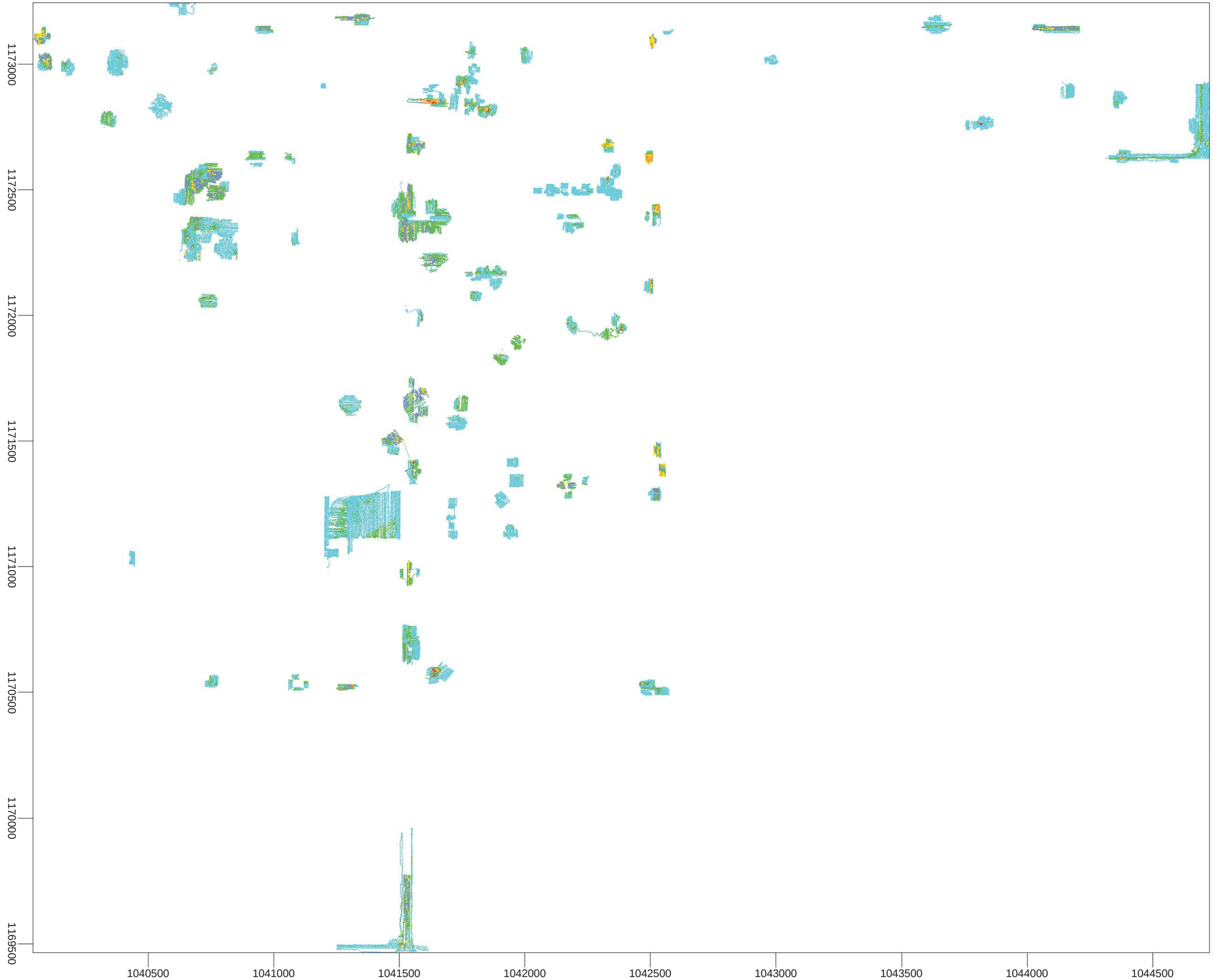

- 4.8 uR/hr to 11.9 uR/hr
- 11.9 uR/hr to 14.1 uR/hr
- 14.1 uR/hr to 16.3 uR/hr
- 16.3 uR/hr to 18.5 uR/hr
- 18.5 uR/hr to 23 uR/hr
- 23 uR/hr to 34 uR/hr
- 34 uR/hr to 56 uR/hr
- 56 uR/hr to 78 uR/hr
- 78 uR/hr to 90 uR/hr

Color scale based on a background mean of 11.9μR/hr standard deviation of 2.2μR/hr

N

NFSS BOP OU
2013-2014
Gamma Survey @4"ags

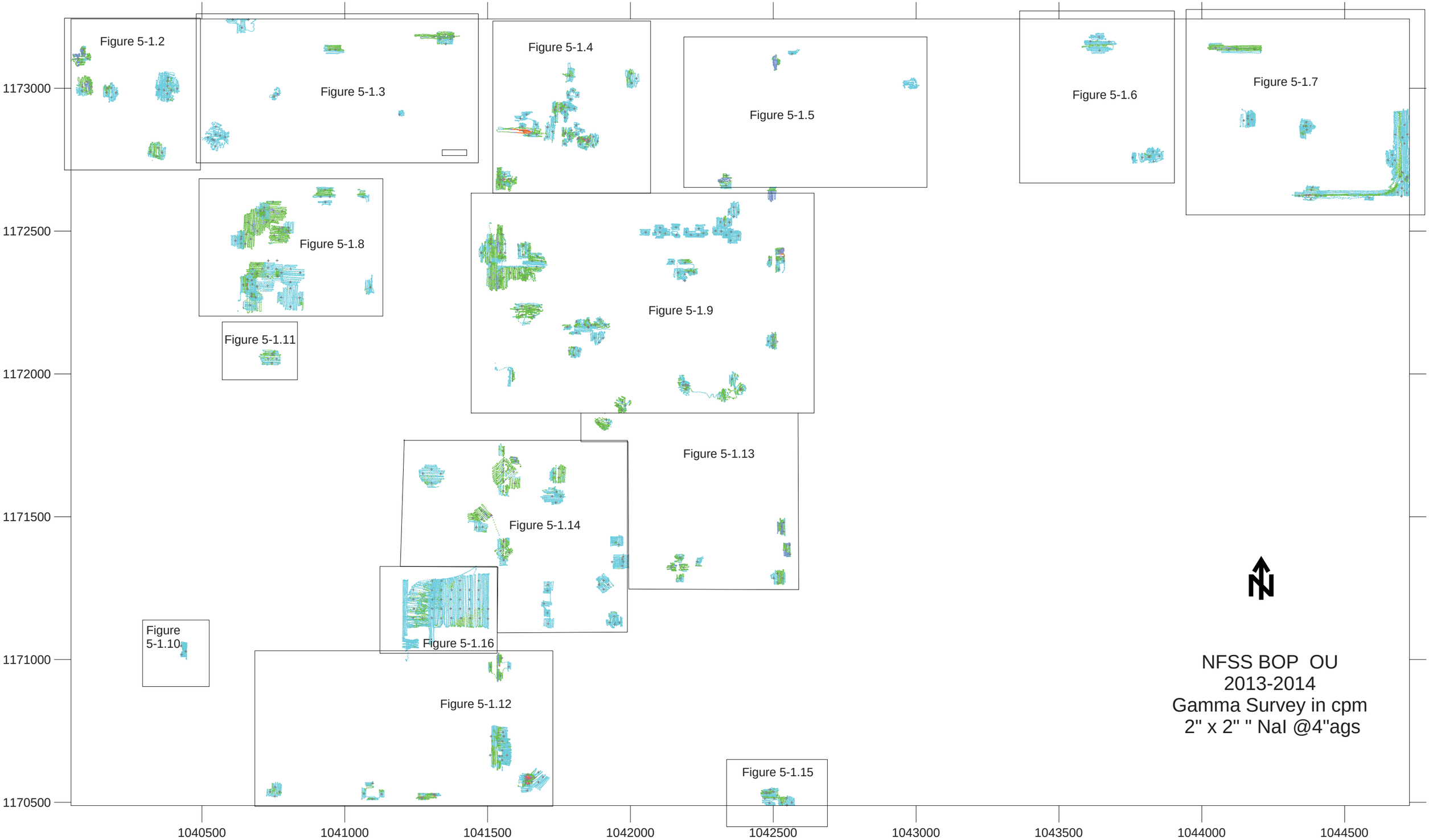

Figure 5-1.1 NFSS BOP OU Figure Key

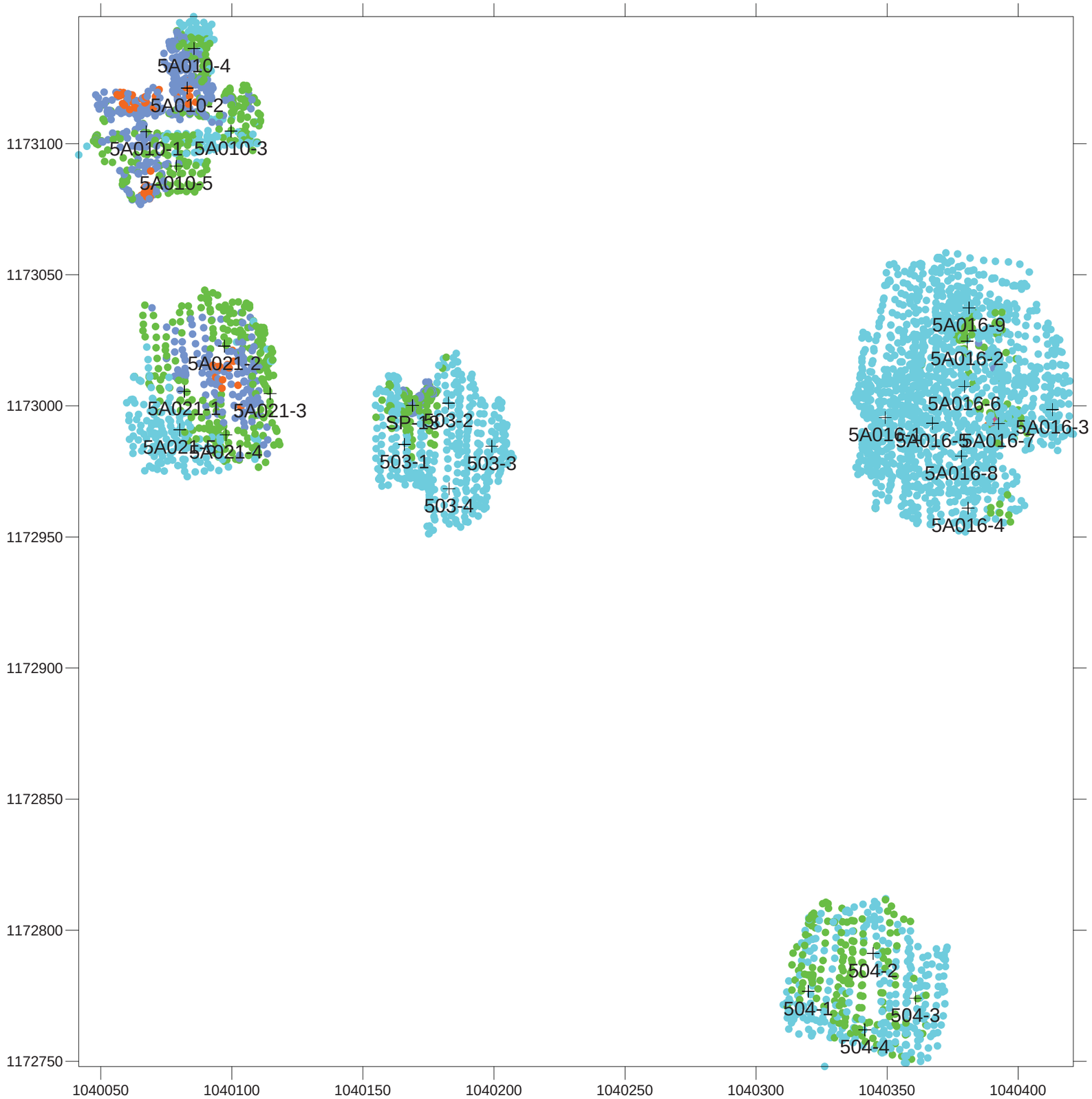

6931 cpm to 11093 cpm
11093 cpm to 13657 cpm
13657 cpm to 16221 cpm
16221 cpm to 18785 cpm
18785 cpm to 21050 cpm

Data Summary
# of points 4061
Mean 11093 cpm
Std Dev 2564 cpm

N

Figure 5-1.2 EU1 Detail
NFSS BOP OU 2013-2014
Gamma Survey in cpm
2" x 2" " NaI @4"ags

5957 cpm to 10212 cpm	
10212 cpm to 13147 cpm	
13147 cpm to 16082 cpm	
16082 cpm to 19017 cpm	
19017 cpm to 24810 cpm	

Data Summary
# of points 3027
Mean 10212 cpm
Std Dev 2935 cpm

Figure 5-1.3 EU2 West Detail
NFSS BOP OU 2013-2014
Gamma Survey in cpm
2" x 2" " NaI @4"ags

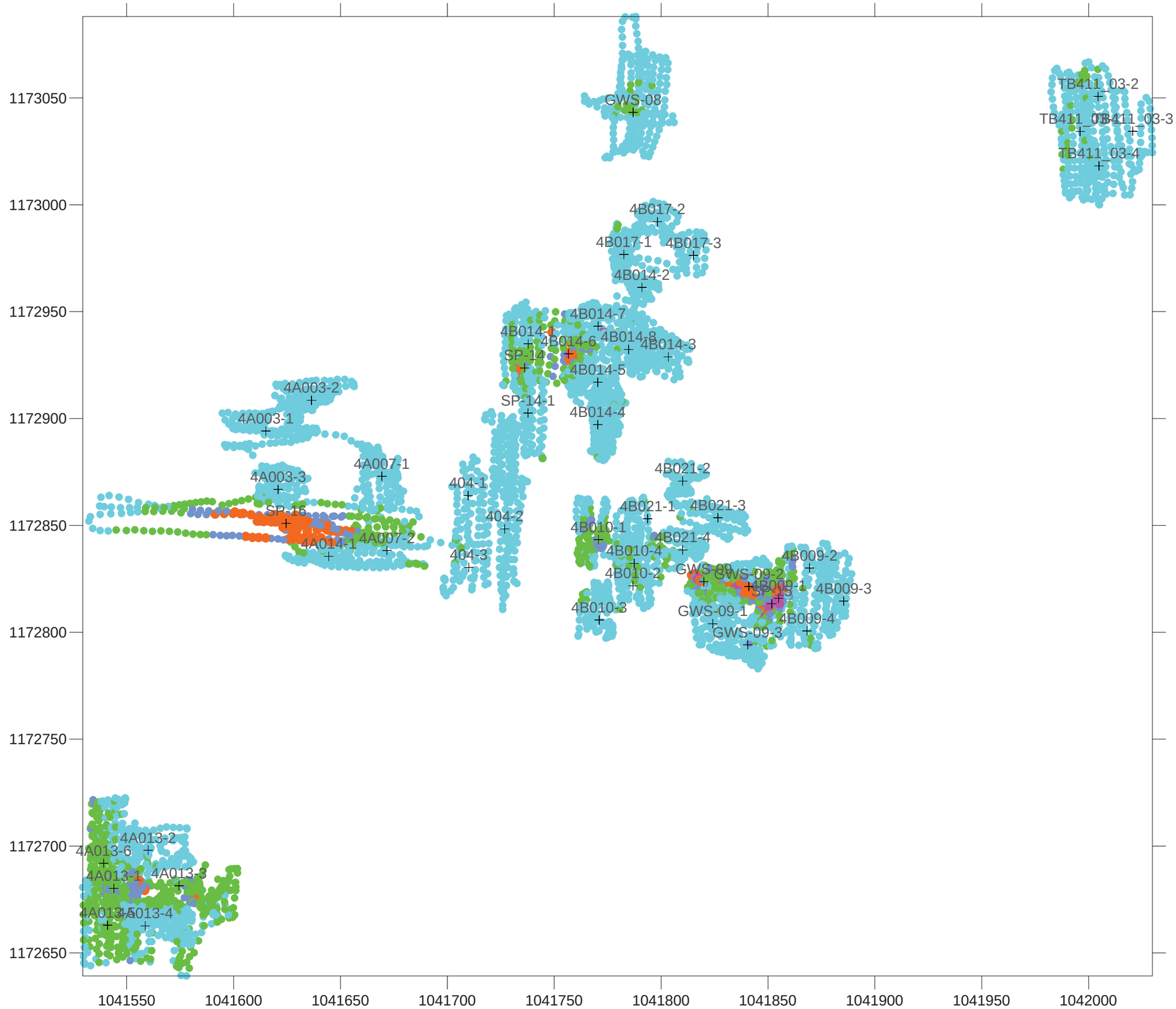

4961 cpm to 11599 cpm
11599 cpm to 15411 cpm
15411 cpm to 19223 cpm
19223 cpm to 23035 cpm
23035 cpm to 37640 cpm

Data Summary
# of points 6525
Mean 11599 cpm
Std Dev 3812 cpm

Figure 5-1.4 EU3 Detail
NFSS BOP OU 2013-2014
Gamma Survey in cpm
2" x 2" " NaI @4"ags

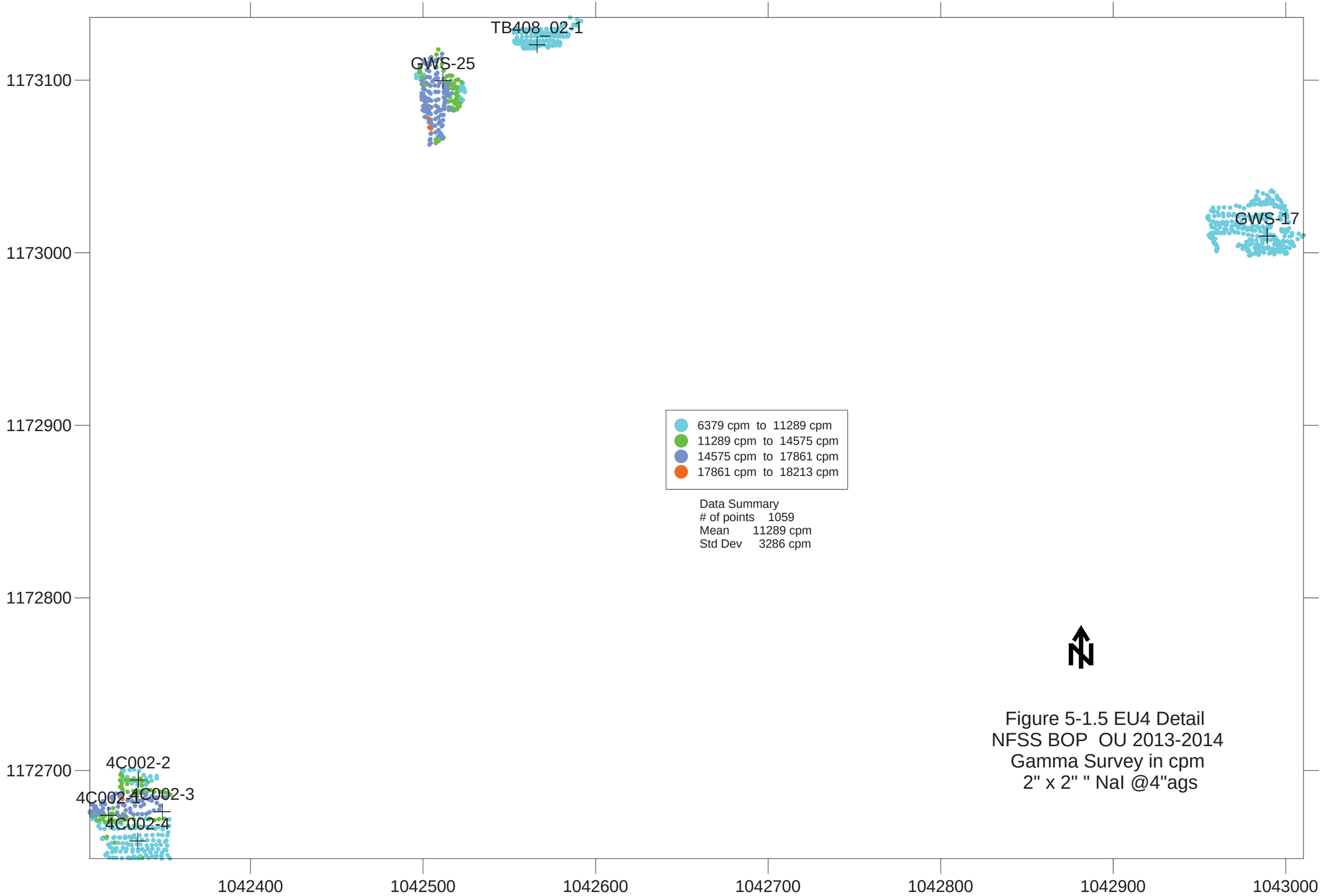

Figure 5-1.5 EU4 Detail
NFSS BOP OU 2013-2014
Gamma Survey in cpm
2" x 2" " NaI @4"ags

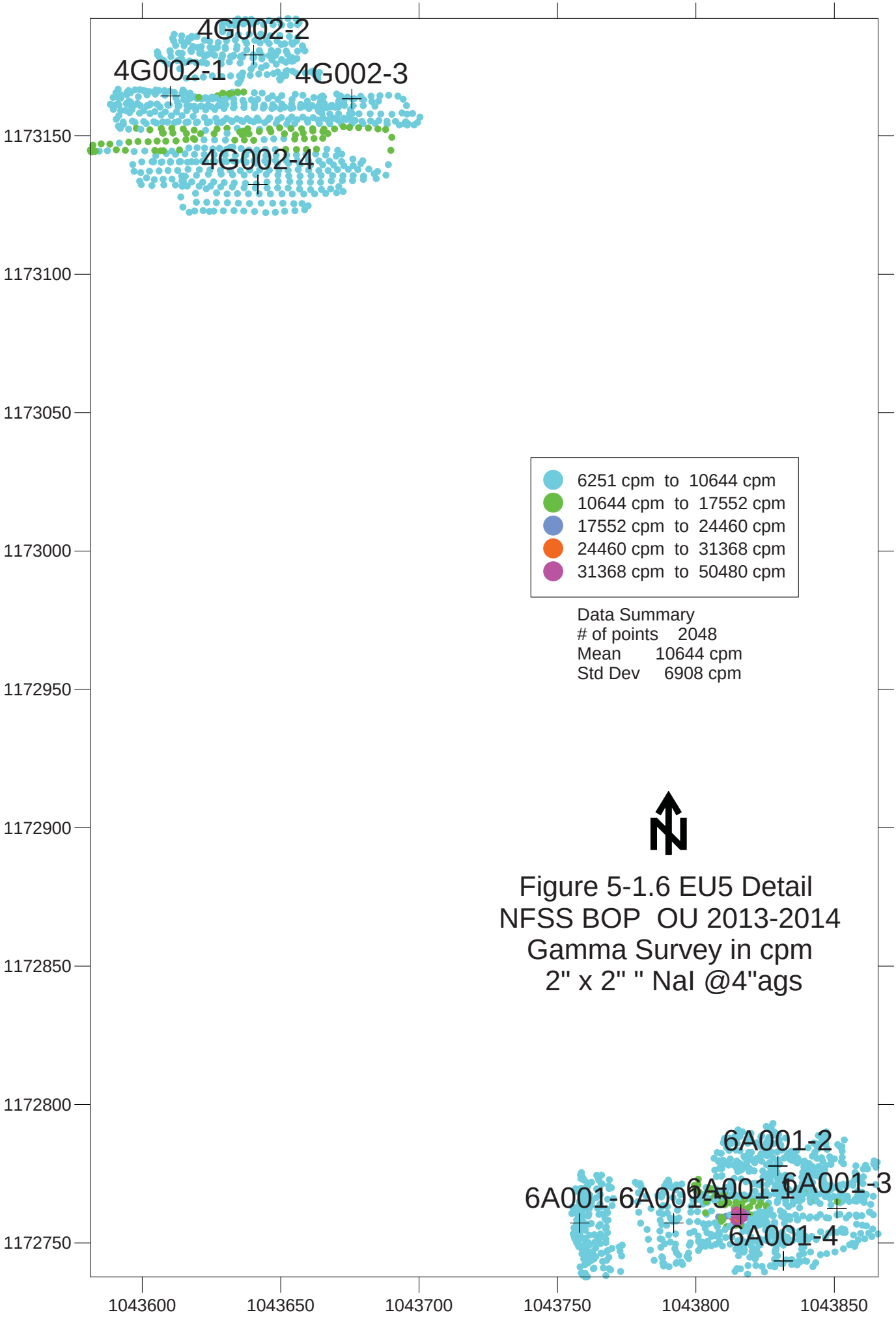

Figure 5-1.6 EU5 Detail
NFSS BOP OU 2013-2014
Gamma Survey in cpm
2" x 2" " NaI @4"ags

6151 cpm to 10996 cpm
10996 cpm to 15258 cpm
15258 cpm to 19520 cpm
19520 cpm to 23782 cpm
23782 cpm to 53616 cpm
53616 cpm to 62190 cpm

Data Summary
# of points 8131
Mean 10996 cpm
Std Dev 4262 cpm

Figure 5-1.7 EU6 Detail
NFSS BOP OU 2013-2014
Gamma Survey in cpm
2" x 2" " NaI @4"ags

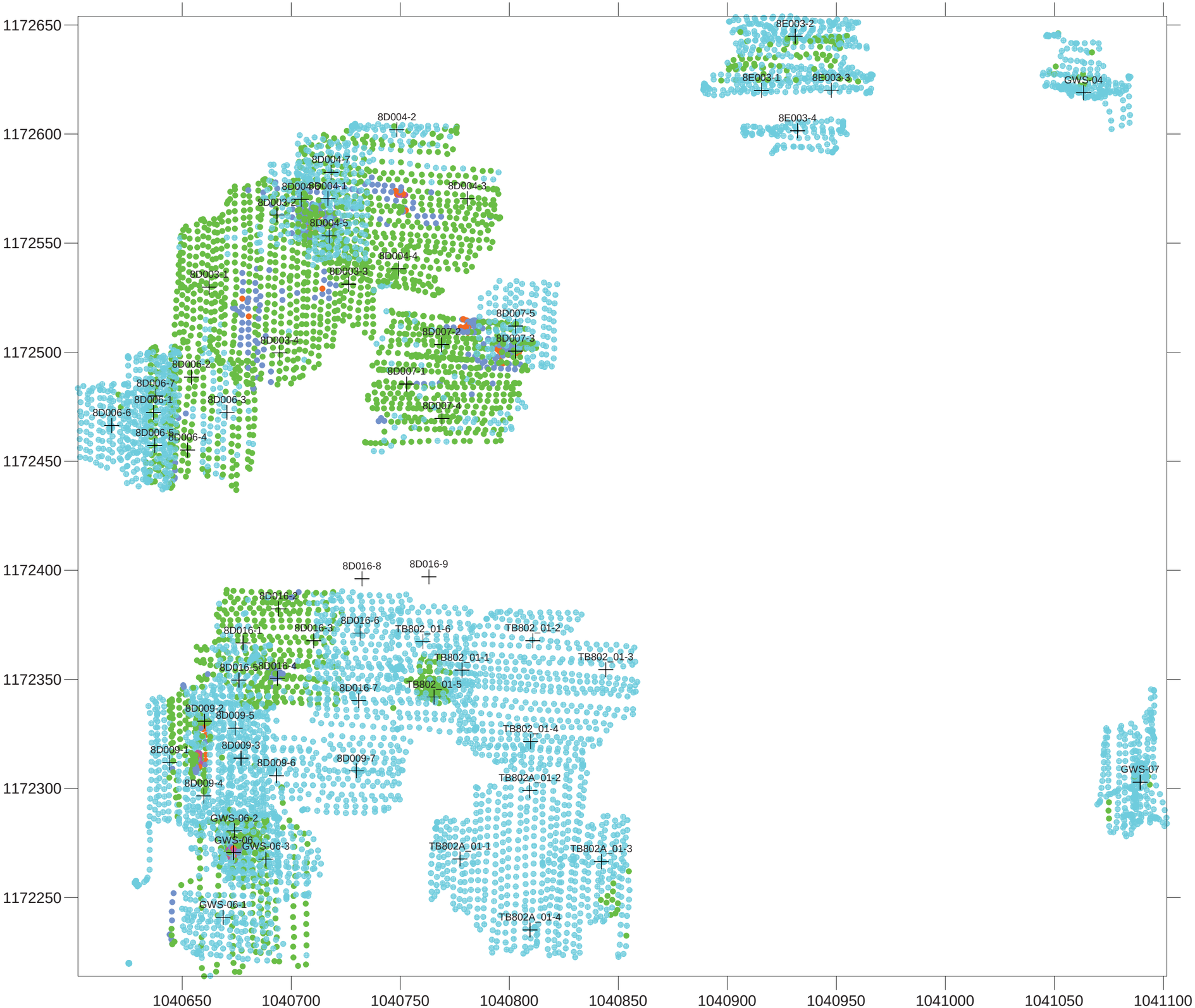

5503 cpm to 11533 cpm
11533 cpm to 14435 cpm
14435 cpm to 17337 cpm
17337 cpm to 20239 cpm
20239 cpm to 33960 cpm

Data Summary
# of points 8631
Mean 11533 cpm
Std Dev 2902 cpm

Figure 5-1.8
EU 7 Detail
NFSS BOP OU 2013-2014
Gamma Survey in cpm
2" x 2" " NaI @4"ags

Figure 5-1.9
EU8 Detail
NFSS BOP OU
2013-2014
Gamma Survey
in cpm
2" x 2" " NaI
@4"ags

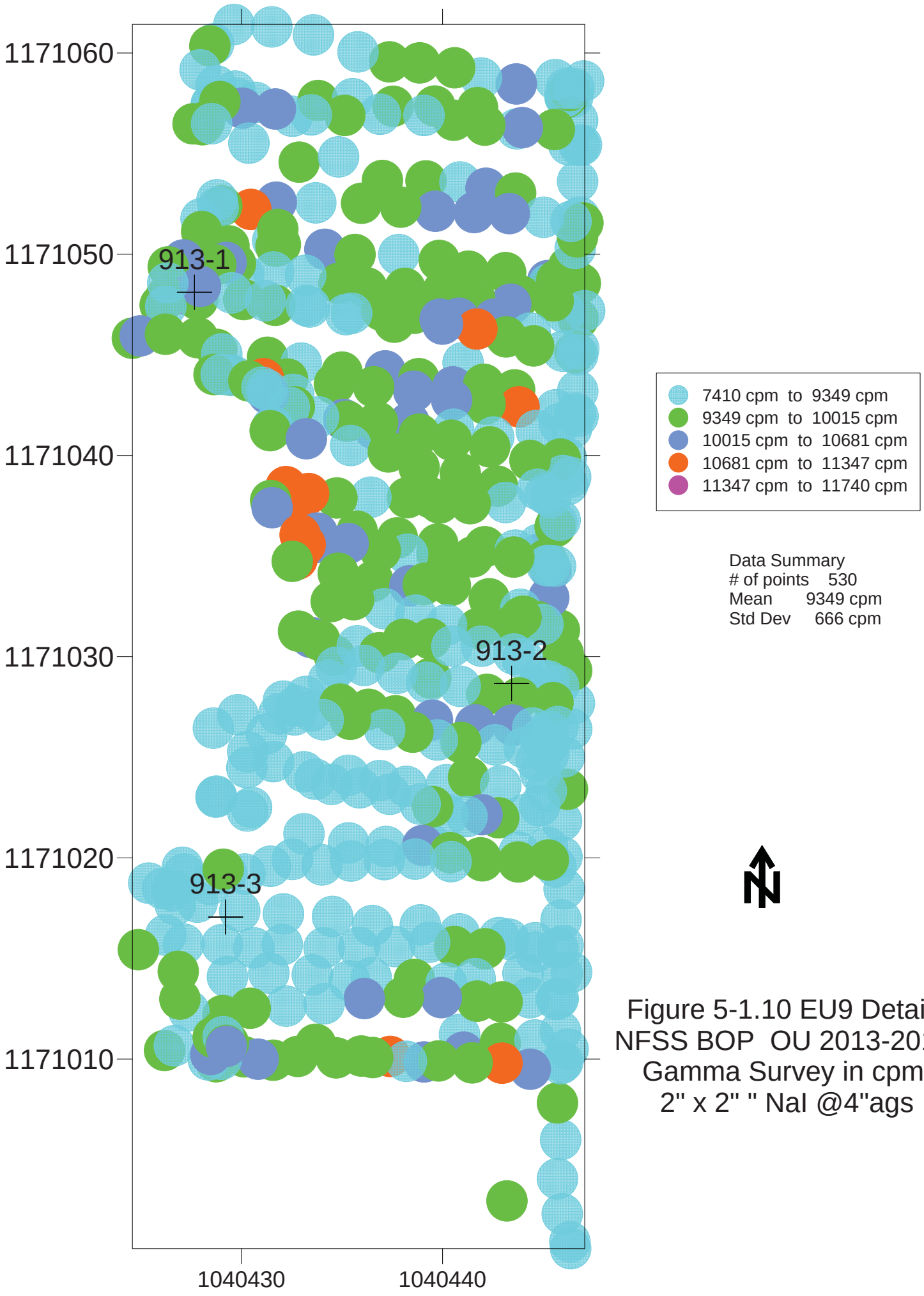

Figure 5-1.10 EU9 Detail
NFSS BOP OU 2013-2014
Gamma Survey in cpm
2" x 2" " NaI @4"ags

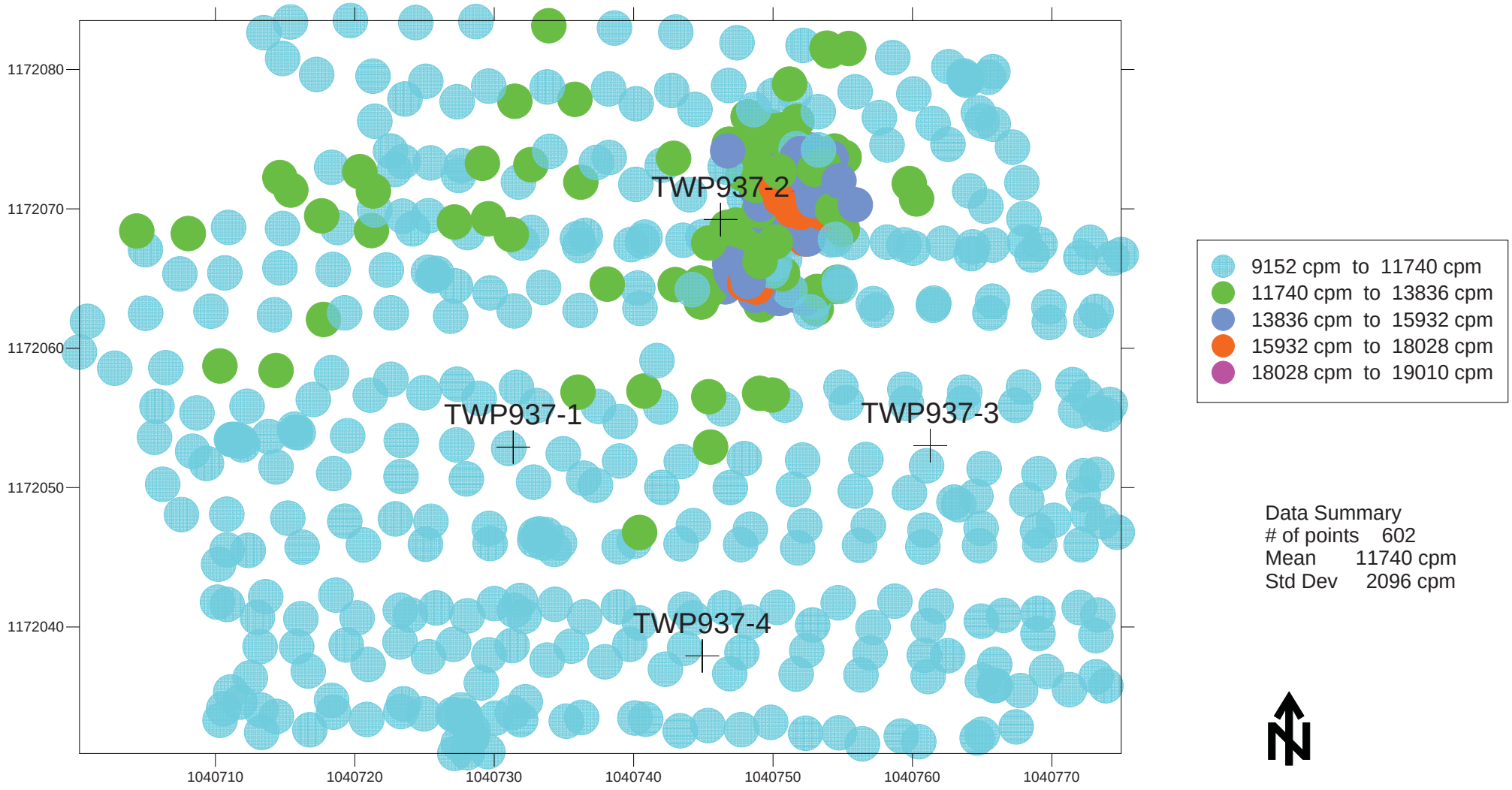

Figure 5-1.11 EU 10 Detail
NFSS BOP OU 2013-2014
Gamma Survey in cpm
2" x 2" " NaI @4"ags

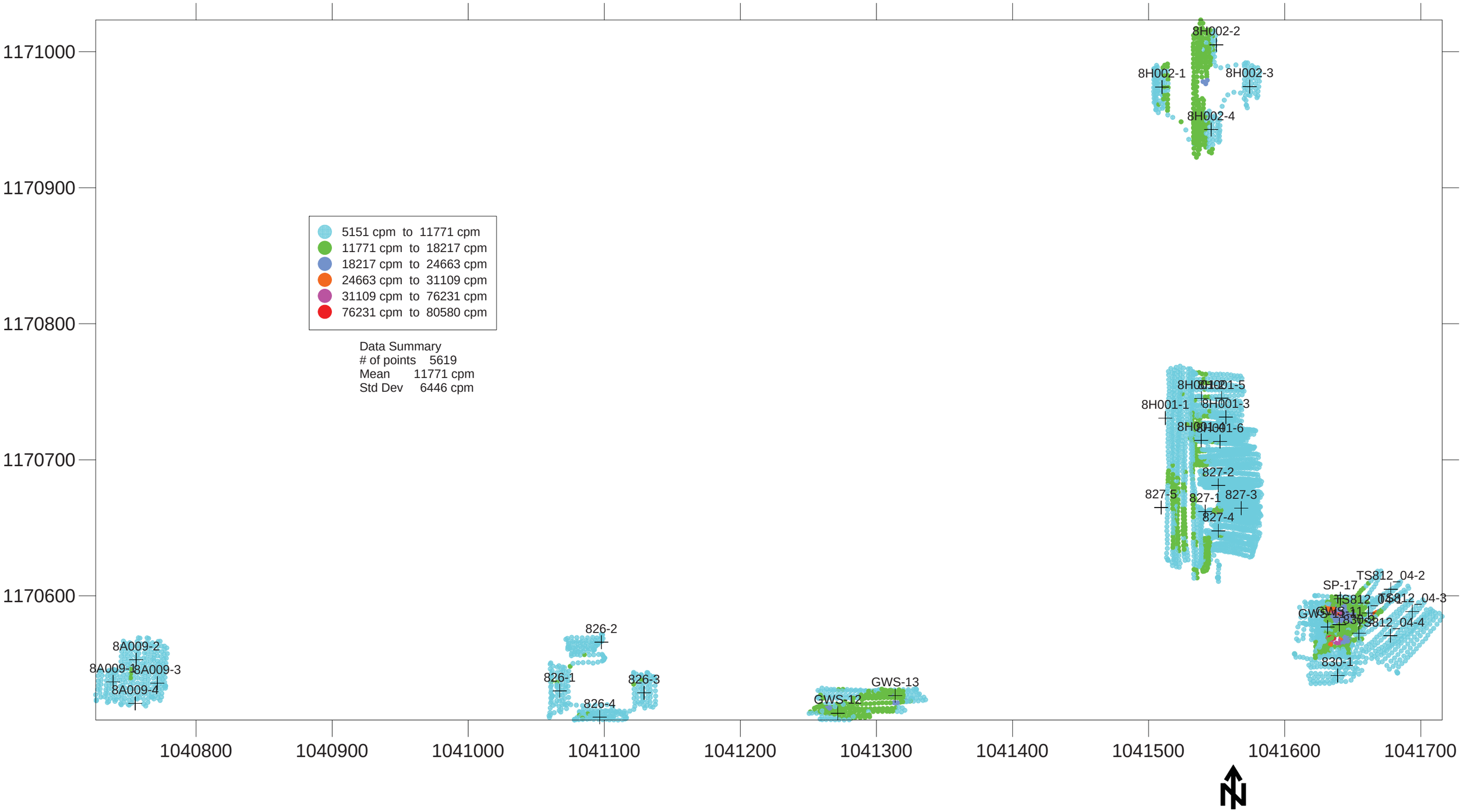

Figure 5-1.12 EU11 Detail
NFSS BOP OU 2013-2014
Gamma Survey in cpm
2" x 2" " NaI @4"ags

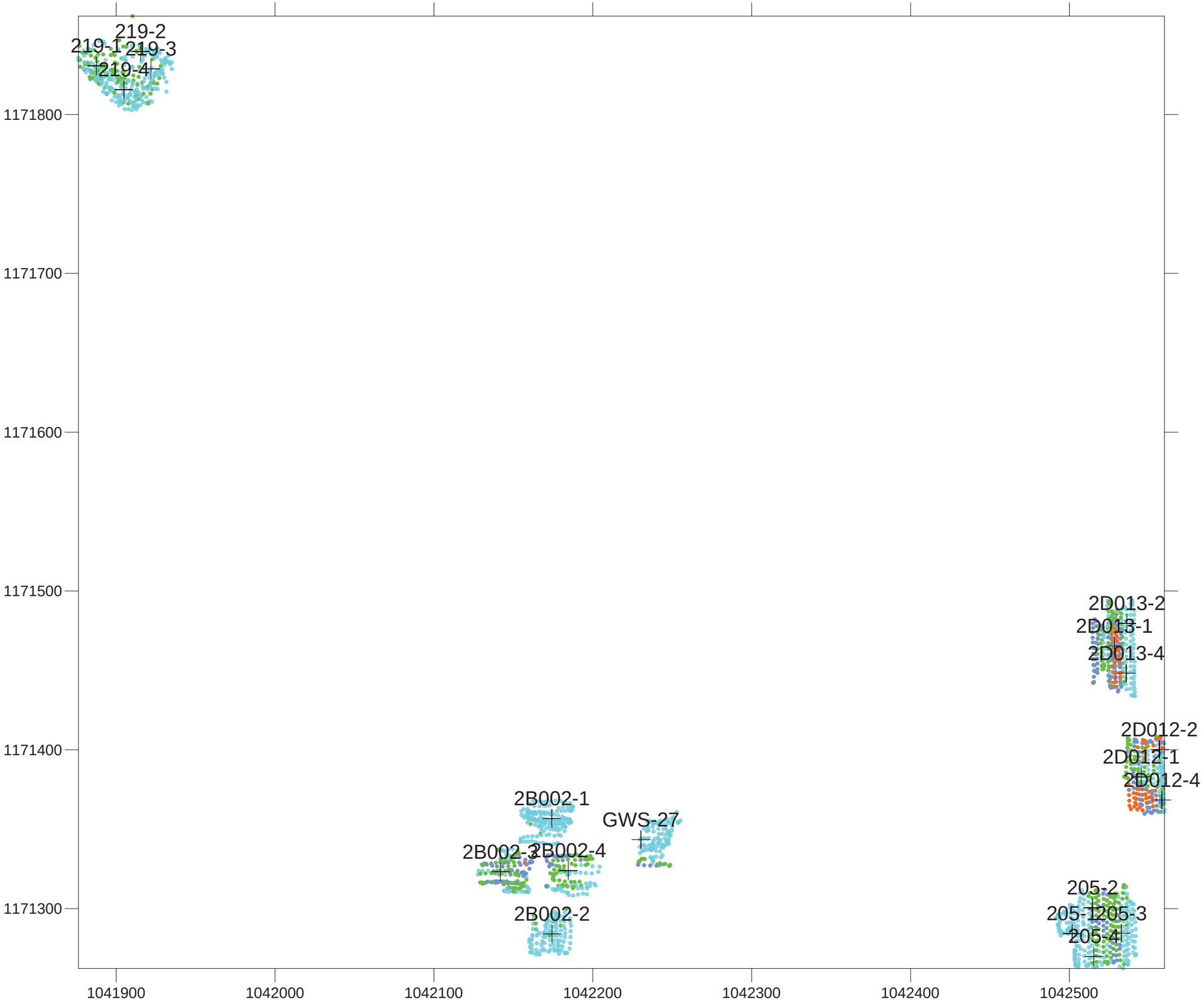

7955 cpm to 12133 cpm
12133 cpm to 14107 cpm
14107 cpm to 16081 cpm
16081 cpm to 18055 cpm
18055 cpm to 18180 cpm

Data Summary
# of points 1902
Mean 12133 cpm
Std Dev 1974 cpm

Figure 5-1.13 EU 12 Detail
NFSS BOP OU 2013-2014
Gamma Survey in cpm
2" x 2" " NaI @4"ags

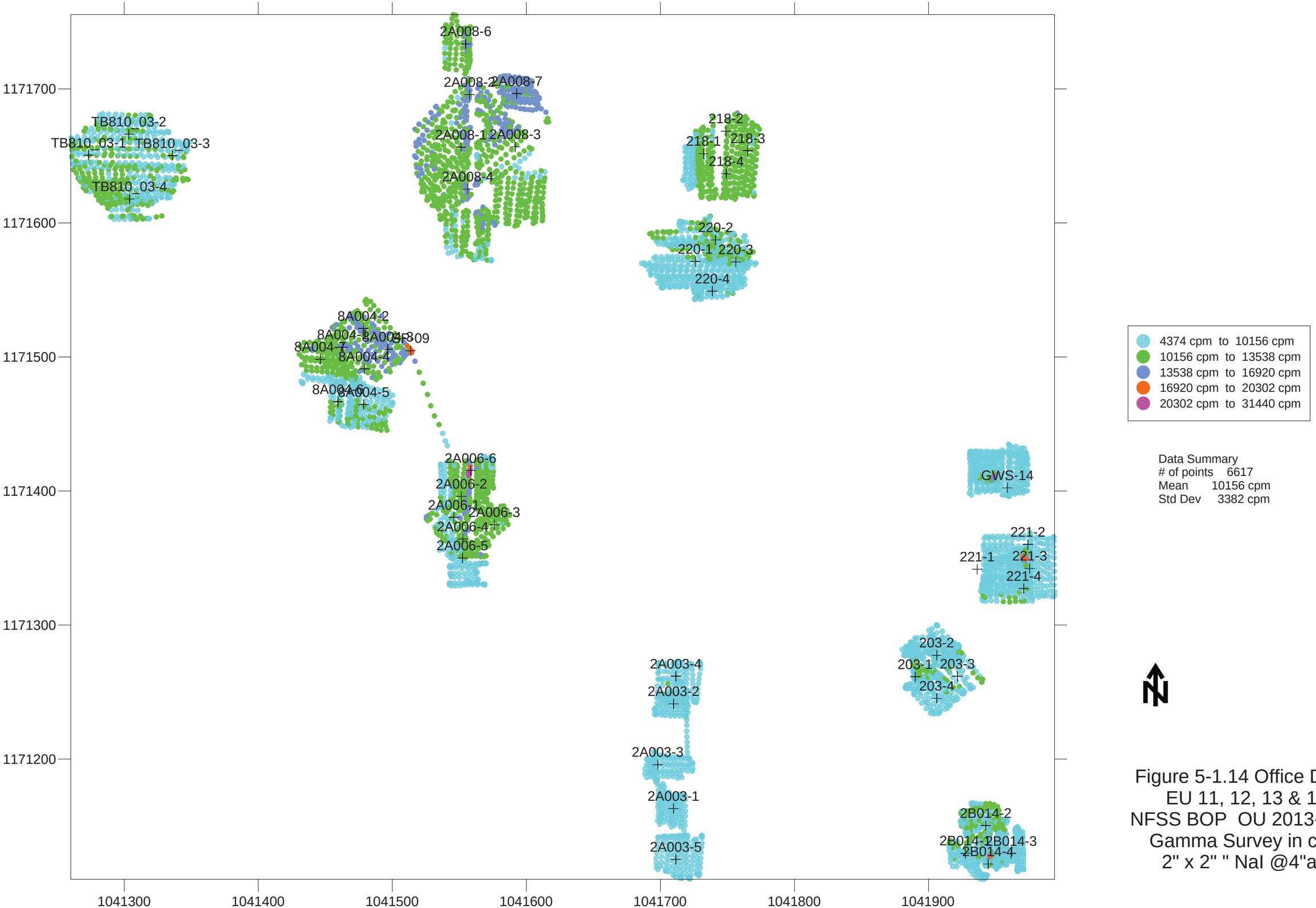

Figure 5-1.14 Office Detail
EU 11, 12, 13 & 14
NFSS BOP OU 2013-2014
Gamma Survey in cpm
2" x 2" " NaI @4"ags

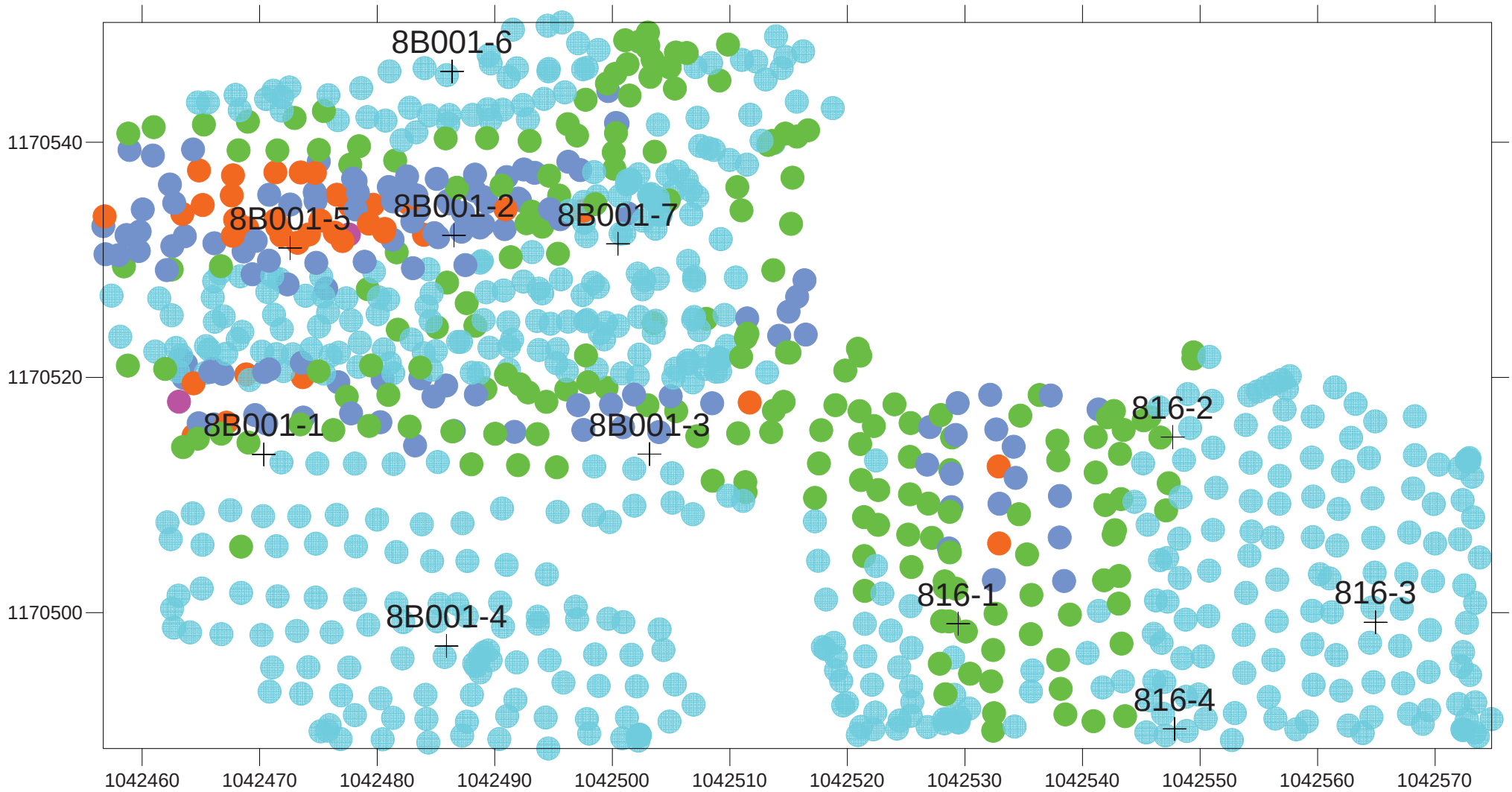

6119 cpm to 10125 cpm
10125 cpm to 12242 cpm
12242 cpm to 14359 cpm
14359 cpm to 16476 cpm
16476 cpm to 16970 cpm

Data Summary
# of points 906
Mean 10125 cpm
Std Dev 2117 cpm

Figure 5-1.15 EU14 Detail
NFSS BOP OU 2013-2014
Gamma Survey in cpm
2" x 2" " NaI @4"ags

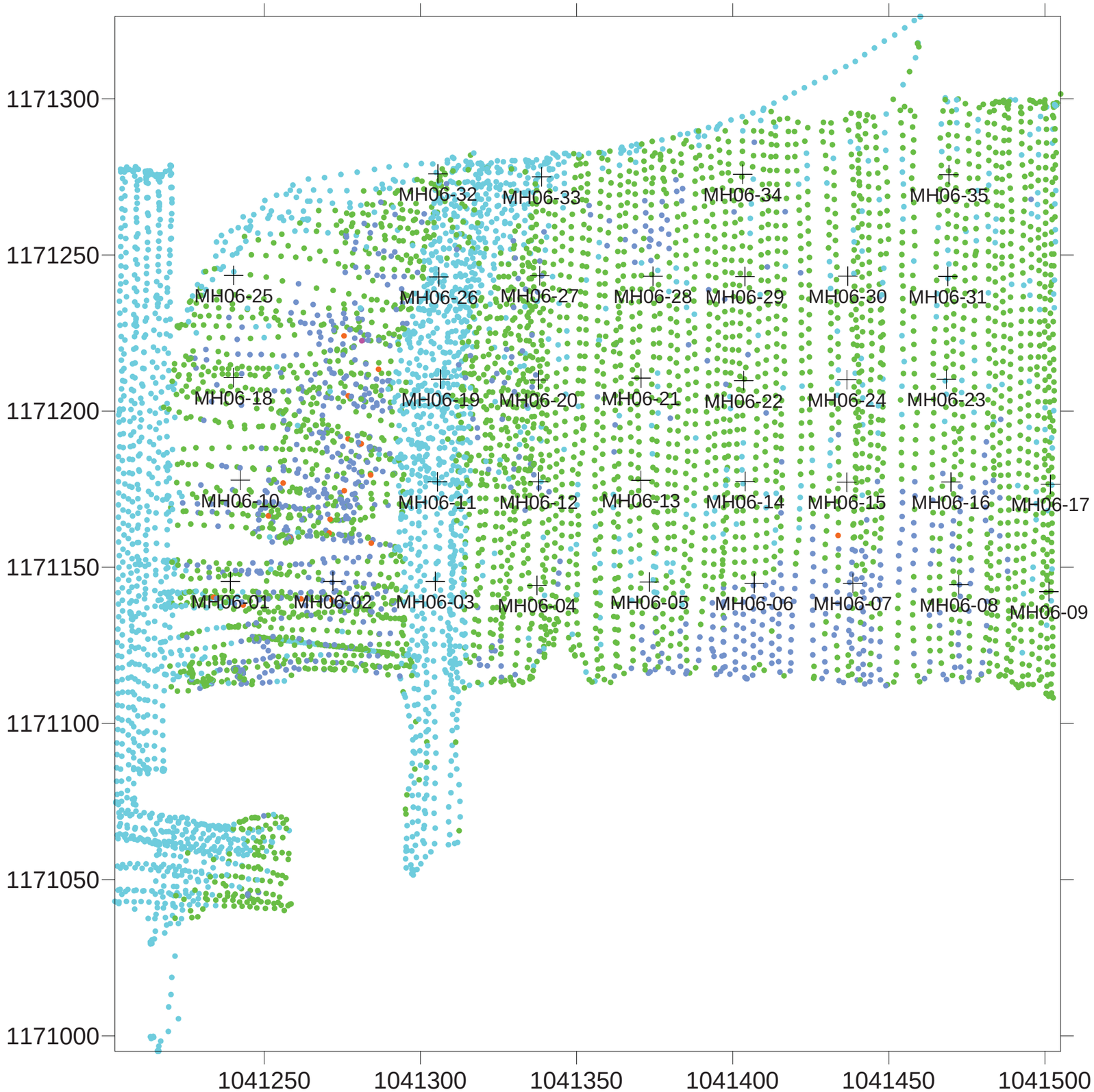

4347 cpm to 9217 cpm
9217 cpm to 10808 cpm
10808 cpm to 12399 cpm
12399 cpm to 13990 cpm
13990 cpm to 14100 cpm

Data Summary
# of points 7377
Mean 9217 cpm
Std Dev 1591 cpm

N

Figure 5-1.16 Manhole 6 Detail
NFSS BOP OU 2013-2014
Gamma Survey in cpm
2" x 2" " NaI @4"ags

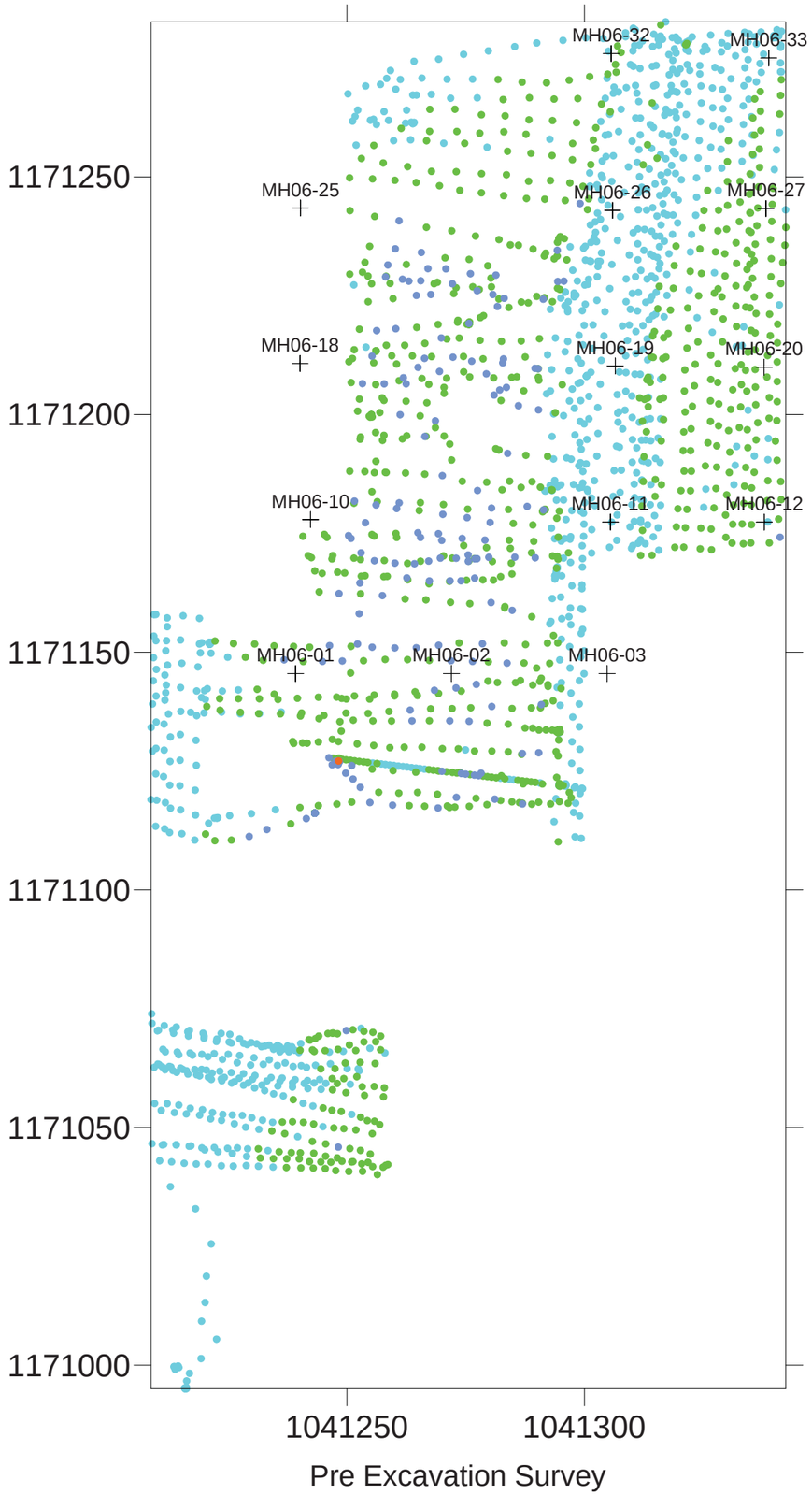

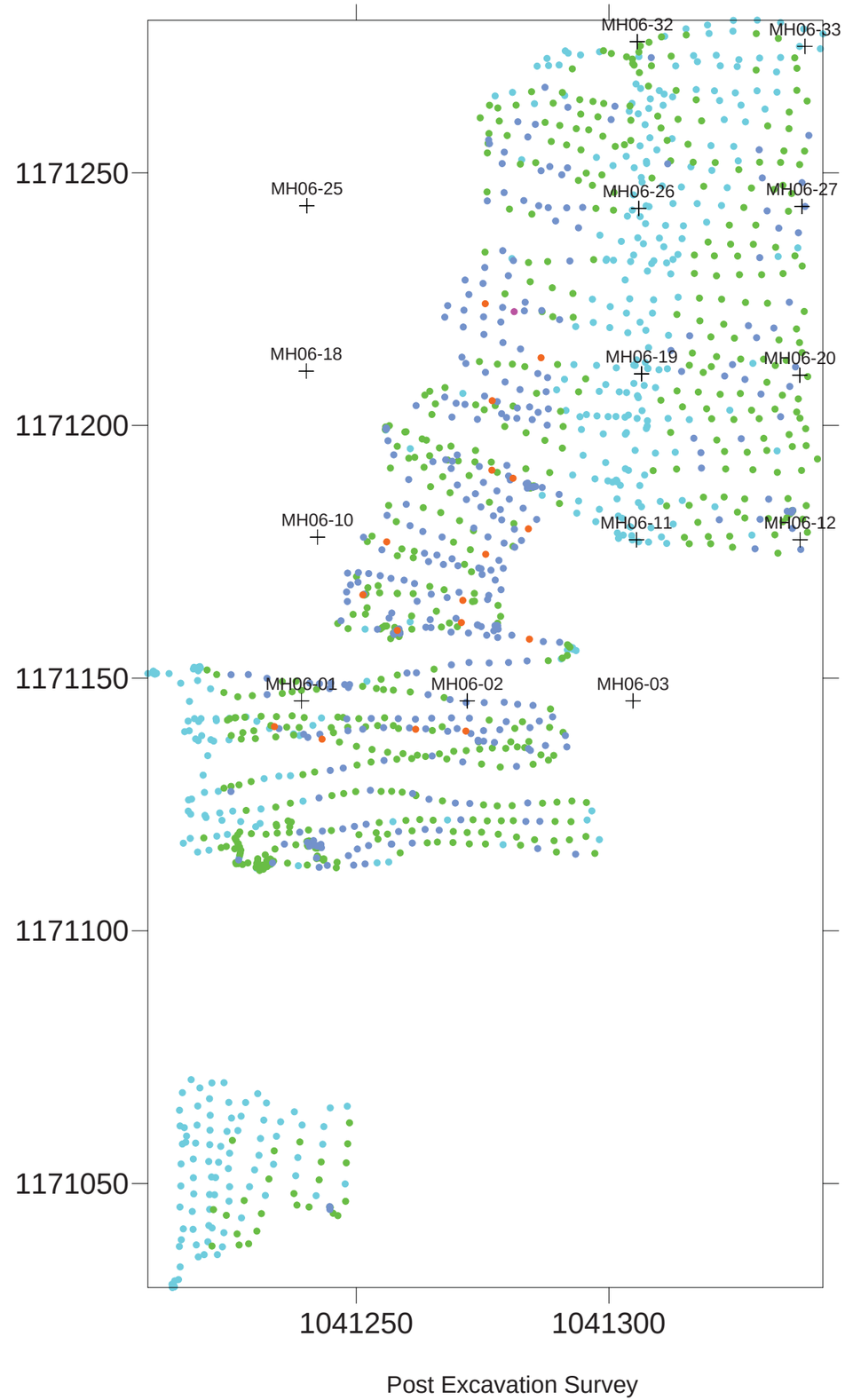

- 4347 cpm to 9217 cpm
- 9217 cpm to 10808 cpm
- 10808 cpm to 12399 cpm
- 12399 cpm to 13990 cpm
- 13990 cpm to 14100 cpm

Figure 5-1.17 Manhole 6
Pre Post Excavation Comparison
NFSS BOP OU 2013-2014
Gamma Survey in cpm
2" x 2" " NaI @4"ags

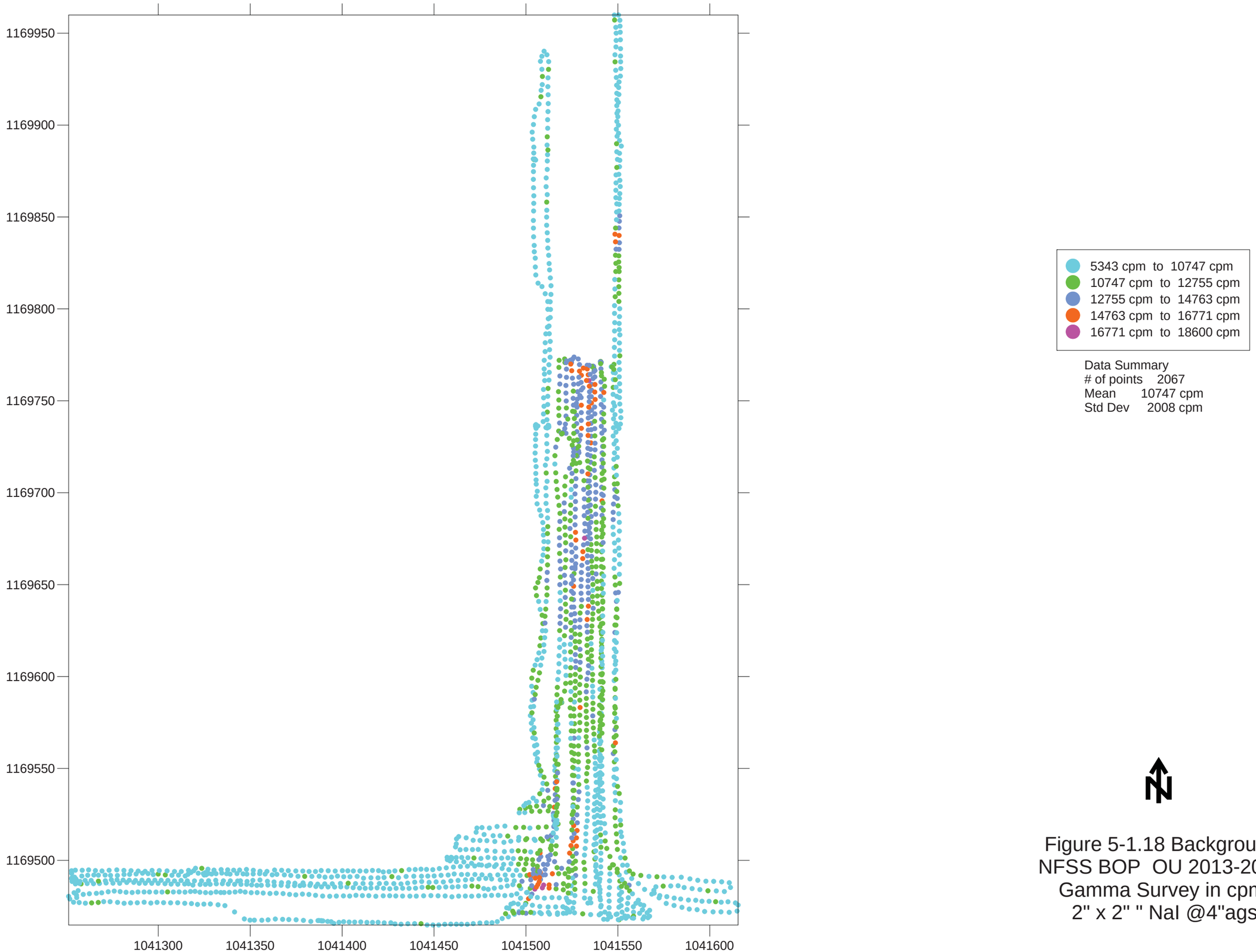

Figure 5-1.18 Background
NFSS BOP OU 2013-2014
Gamma Survey in cpm
2" x 2" " NaI @4"ags

Appendix E-5-2

GPS Summary tables

Table 5-2.1

Gamma Walkover Summary Data

ID	# of points	Avg Vel (Ft/sec)	Min cpm	Max cpm	Mean cpm	SD cpm
EU1	4061	1.4	6931	21045	11093	2564
EU 2	3027	1.2	5957	24809	10212	2935
EU 2	6525	1.2	4961	37638	11599	3812
EU 4	1253	1.1	6379	18212	11861	3463
EU 5	2048	1.2	6251	50472	10644	6908
EU 6	8131	1.4	6151	62183	10996	4262
EU 7	8631	1.5	5503	33951	11533	2902
EU 8	14923	1.3	4850	38296	10513	2764
EU 9	530	0.7	7410	11739	9349	666.4
EU 10	602	1.4	9152	19009	11740	2096
EU 11	8110	1.2	4374	80578	11316	5757
EU 12	3312	1.4	5530	18179	12099	1883
EU 13	2133	1.4	4894	31430	8812	3755
EU 14	1489	1.4	6119	17902	10045	1805
Manhole	7377	1.9	4347	14092	9217	1591
All	72152	1.5	4374	80578	10807	3689
Background	2067	1.9	5343	18596	10747	2008

Table 5-2.2

EU1 Gamma Walkover Data

EXISTING BORING	NEW BORING	GWS ID	# of points	Avg Vel (Ft/sec)	Min cpm	Max cpm	Mean cpm	Median cpm	SD cpm
503	503-1	503	584	1.1	7115	15500	10435	9726	2033
	503-2								
	503-3								
	503-4								
N/A	SP13								
504	504-1	504	448	1.7	9047	13620	10879	10838	809
	504-2								
	504-3								
	504-4								
5A010	5A010-1	5a010	847	1.0	8552	18401	13769	13891	1976
	5A010-2								
	5A010-3								
	5A010-4								
	5A010-5								
5A016	5A016-1	5a016	1612	1.6	6931	21045	9527	8976	2063
	5A016-2								
	5A016-3								
	5A016-4								
	5A016-5								
	5A016-6								
	5A016-7								
	5A016-8								
	5A016-9								
5A021	5A021-1	5a021	570	1.5	8149	18008	12391	12439	2129
	5A021-2								
	5A021-3								
	5A021-4								
	5A021-5								

Table 5-2.3

EU2 Gamma Walkover Data

EXISTING BORING	NEW BORING	GWS ID	# of points	Avg Vel (Ft/sec)	Min cpm	Max cpm	Mean cpm	Median cpm	SD cpm
8F001	8F001-1	8F001	323	1.5	5957	10864	7952	7974	805
	8F001-2								
	8F001-3								
8F003	8F003-1	8F003	951	1.5	6310	10242	8069	8084	609.8
	8F003-2								
	8F003-3								
	8F003-4								
	8F003-5								
	8F003-6								
	8F003-7								
	8F003-8								
8F005	8F005-1	Not Surveyed Sample locations in the Drainage Ditch							
	8F005-2								
	8F005-3								
8F006	8F006-1	8F006	815	1.2	8865	18869	12580	12816	1820
	8F006-2								
	8F006-3								
	8F006-4								
	8F006-5								
	8F006-6								
N/A	GWS-1	GWS-1	390	0.9	7543	24809	12401	9914	4477
N/A	GWS-2	GWS-2/3	330	1.3	7998	14957	11496	11505	1779
N/A	GWS-3								
N/A	GWS-5	GWS-5	218	0.6	6380	10513	8195	8251	634
404	404-1	404	267	1.4	4961	13373	8875	9410	1983
	404-2								
	404-3								
4A007	4A007-1	4A007 4A014	330	1.3	7941	21005	11023	10182	2507
	4A007-2								
4A014	4A014-1								
4A003	4A003-1	4A003	461	1.0	6637	12434	9212	9097	822.8
	4A003-2								
	4A003-3								
4A013	4A013-1	4A013	1232	1.3	8496	20158	12303	11935	2191
	4A013-2								
	4A013-3								
	4A013-4								
	4A013-5								
	4A013-6								
	4A013-7								
4B001	4B001-1	4B001	108	1.2	5041	11051	8865	9485	1558
N/A	SP14	SP-14	285	1.1	8793	27402	12953	11121	4356
SP-14	SP-14-1								
N/A	SP16	SP16	349	1.3	7759	22390	15701	16443	4332

Table 5-2.4

EU3 Gamma Walkover Summary Table

EXISTING BORING	NEW BORING	GWS ID	# of points	Avg Vel (Ft/sec)	Min cpm	Max cpm	Mean cpm	Median cpm	SD cpm
4B009	4B009-1	4B009	390	1.2	8272	37638	15223	10804	7968
4B009	4B009-2								
4B009	4B009-3								
4B009	4B009-4								
4B010	4B010-1	4B010 4B021	813	1.0	7797	18783	11055	10352	2224
4B010	4B010-2								
4B010	4B010-3								
4B010	4B010-4								
4B021	4B021-1								
4B021	4B021-2								
4B021	4B021-3								
4B021	4B021-4								
4B014	4B014-1	4B014	828	1.3	6540	29218	10542	10012	2732
4B014	4B014-2								
4B014	4B014-3								
4B014	4B014-4								
4B014	4B014-5								
4B014	4B014-6								
4B014	4B014-7								
4B014	4B014-8								
4B017	4B017-1	4B017	313	1.0	6116	11808	8731	8986	1434
4B017	4B017-2								
4B017	4B017-3								
NA	GWS-8	GWS-8	273	1.2	8686	14662	10768	10455	1262
NA	GWS-9	GWS-9 SP-15	529	1.2	9292	33525	13746	11416	4841
GWS-09	GWS-09-1								
GWS-09	GWS-09-2								
GWS-09	GWS-09-3								
NA	SP15								
TB411_03	TB411_03-1	TB411_03	347	1.4	7926	12896	10213	10242	858.5
TB411_03	TB411_03-2								
TB411_03	TB411_03-3								
TB411_03	TB411_03-4								

Table 5-2.5

EU4 Gamma Walkover Data

EXISTING BORING	NEW BORING	GWS ID	# of points	Avg Vel (Ft/sec)	Min cpm	Max cpm	Mean cpm	Median cpm	SD cpm
4C002	4C002-1	4C002	307	1.2	9123	18014	12507	11484	2551
4C002	4C002-2								
4C002	4C002-3								
4C002	4C002-4								
NA	GWS-17	GWS-17	343	1.0	6379	12062	8460	8340	988.7
GWS-25	GWS-25	GWS-25	286	1.0	8894	18212	14760	15086	1989
TB408_02	TB408_02-1	TB408_02	123	1.0	6895	9238	8066	7945	608.1

Table 5-2.6

EU5 Gamma Walkover Data

EXISTING BORING	NEW BORING	GWS ID	# of points	Avg Vel (Ft/sec)	Min cpm	Max cpm	Mean cpm	Median cpm	SD cpm
4G002	4G002-1	4G002	859	1.5	6251	13255	8793	8493	1320
4G002	4G002-2								
4G002	4G002-3								
4G002	4G002-4								
6A001	6A001-1	6A001	1189	1.1	7814	50472	11981	9371	8758
6A001	6A001-2								
6A001	6A001-3								
6A001	6A001-4								
6A001	6A001-5								
6A001	6A001-6								

Table 5-2.7

EU6 Gamma Walkover Data

EXISTING BORING	NEW BORING	GWS ID	# of points	Avg Vel (Ft/sec)	Min cpm	Max cpm	Mean cpm	Median cpm	SD cpm
606	606-1								
	606-2								
	606-3								
	606-4	606	615	1.5	7646	15686	10425	10011	1446
6B005	6B005-1								
	6B005-2								
	6B005-3								
	6B005-4								
	6B005-5								
	6B005-6								
	6B005-7								
NA	SP1	6b005	923	1.5	8035	62183	13348	10537	9424
828	828-1								
	828-2								
	828-3								
	828-4								
	828-5	828	1178	1.7	6474	12971	8866	8504	1215
829	829-1								
	829-2								
	829-3								
	829-4	829	809	1.3	7464	21643	11495	10612	2816
EU061	EU061-1								
	EU061-2								
	EU061-3								
	EU061-4	EU61	626	1.5	6151	12938	9036	8826	1179
GWS-18	GWS-18								
	GWS-18-1								
	GWS-18-2								
	GWS-18-3								
	GWS-18-4	GWS-18	678	1.4	7862	13376	9780	9523	1054
GWS-19	GWS-19								
	GWS-19-1								
	GWS-19-2								
	GWS-19-3								
	GWS-19-4	GWS-19	1012	1.0	7918	26443	12609	9932	5201
NA	GWS-20	GWS-20	258	1.6	8661	14540	10117	9722	1084
NA	GWS-21								
NA	GWS-22								
NA	GWS-23								
NA	GWS-24	GWS-21-24	994	1.3	8045	16016	12547	12949	1832

Table 5-2.8

EU7 Gamma Walkover Summary Table

EXISTING BORING	NEW BORING	GWS ID	# of points	Avg Vel (Ft/sec)	Min cpm	Max cpm	Mean cpm	Median cpm	SD cpm
8D003	8D003-1	8D003	673	1.7	10809	18299	13228	12957	1319
	8D003-2								
	8D003-3								
	8D003-4								
8D004	8D004-1	8D004	982	1.5	8531	31792	12380	12305	2353
	8D004-2								
	8D004-3								
	8D004-4								
	8D004-5								
	8D004-6								
	8D004-7								
8D006	8D006-1	8D006	778	1.5	5809	17092	10236	10128	2053
	8D006-2								
	8D006-3								
	8D006-4								
	8D006-5								
	8D006-6								
	8D006-7								
8D007	8D007-1	8D007	899	1.3	8081	20124	13092	12580	2238
	8D007-2								
	8D007-3								
	8D007-4								
	8D007-5								
8D009	8D009-1	8D009	970	1.5	5929	33951	11548	10354	3908
	8D009-2								
	8D009-3								
	8D009-4								
	8D009-5								
	8D009-6								
	8D009-7								
8D016	8D016-1	8D016	877	1.5	8458	17171	11336	11238	1384
	8D016-2								
	8D016-3								
	8D016-4								
	8D016-5								
	8D016-6								
	8D016-7								
8E003	8E003-1	8E003	606	1.5	8280	12793	10381	10364	1019
	8E003-2								
	8E003-3								
	8E003-4								

Table 5-2.8

EU7 Gamma Walkover Summary Table

EXISTING BORING	NEW BORING	GWS ID	# of points	Avg Vel (Ft/sec)	Min cpm	Max cpm	Mean cpm	Median cpm	SD cpm
na	GWS-4	gws-04	209	1.1	5535	12879	9846	9872	1362
GWS-6	GWS-6	gws-06	961	1.4	5503	33105	12840	11104	5143
	GWS-06-1								
	GWS-06-2								
	GWS-06-3								
na	GWS-7	gws-07	292	1.3	6021	12491	9407	9373	1044
TB802_01	TB802_01-1	tb802_01	796	1.6	8278	16259	10547	10027	1516
	TB802_01-2								
	TB802_01-3								
	TB802_01-4								
	TB802_01-5								
	TB802_01-6								
TB802A_01	TB802A_01-1	tb802a	588	1.7	8285	13042	9819	9757	649.5
	TB802A_01-2								
	TB802A_01-3								
	TB802A_01-4								

Table 5-2.9

EU8 Gamma Walkover Data

EXISTING BORING	NEW BORING	GWS ID	# of points	Avg Vel (Ft/sec)	Min cpm	Max cpm	Mean cpm	Median cpm	SD cpm
3A005	3A005-1	3Acluster	4071	1.5	5199	19478	11420	11497	2132
	3A005-2								
	3A005-3								
	3A005-4								
3A006	3A006-1								
	3A006-2								
	3A006-3								
	3A006-4								
3A007	3A007-1								
	3A007-2								
	3A007-3								
3A017	3A017-1								
	3A017-2								
	3A017-3								
	3A017-4								
	3A017-5								
	3A017-6								
	3A017-7								
3A020	3A020-1								
	3A020-2								
	3A020-3								
	3A020-4								
	3A020-5								
3A023	3A023-1								
	3A023-2								
	3A023-3								
308	308-1	308 3C008	534	1.2	6245	11370	8649	8599	1234
	308-2								
3C008	3C008-1								
	3C008-2								
	3C008-3								
309	309-1	309-1	126	1.2	6971	10032	8943	9046	623.5
312	312-1	312, 3A013	955	1.4	8276	15491	11630	11579	1204
	312-2								
	312-3								
	312-4								
	312-5								
3A013	3A013-1								
	3A013-2								
314	314-1	314	278	1.5	5132	14497	8388	8665	1651
	314-2								
	314-3								
	314-4								

Table 5-2.9

EU8 Gamma Walkover Data

EXISTING BORING	NEW BORING	GWS ID	# of points	Avg Vel (Ft/sec)	Min cpm	Max cpm	Mean cpm	Median cpm	SD cpm
3A002	3A002-1	3A002	627	1.2	6957	15381	10483	10501	1220
	3A002-2								
	3A002-3								
	3A002-4								
3B003	3B003-1	3B003	415	1.4	4850	13568	9325	9934	1911
	3B003-2								
	3B003-3								
	3B003-4								
3B004	3B004-1	3B004	325	1.3	7804	15198	10895	10704	1235
	3B004-2								
	3B004-3								
3B011	3B011-1	3B011	521	1.3	5423	17210	9271	9302	2205
	3B011-2								
	3B011-3								
	3B011-4								
3B013	3B013-1	3B013	309	1.2	8929	14650	10588	10373	872.3
	3B013-2								
	3B013-3								
	3B013-4								
3B015	3B015-1	3B015	444	1.1	10321	12187	11076	11038	359.5
	3B015-2								
	3B015-3								
	3B015-4								
3C006	3C006-1	3C006	439	1.3	6576	10893	8670	8911	1080
	3C006-2								
	3C006-3								
	3C006-4								
3C007	3C007-1	3C007	243	1.1	6345	10517	8545	8831	1301
	3C007-2								
3C011	3C011-1	3C011	113	1.1	5445	9078	7094	7346	897.5
3C014	3C014-1	3C014	776	1.2	6333	14568	9469	9516	1595
	3C014-2								
	3C014-3								
	3C014-4								
	3C014-5								
	3C014-6								
3D001	3D001-1	3D001	327	1.3	7810	19289	11747	10728	2520
	3D001-2								
	3D001-3								
	3D001-4								

Table 5-2.9

EU8 Gamma Walkover Data

EXISTING BORING	NEW BORING	GWS ID	# of points	Avg Vel (Ft/sec)	Min cpm	Max cpm	Mean cpm	Median cpm	SD cpm
3D004	3D004-1	3D004	726	1.0	8098	20373	11859	10891	2782
	3D004-2								
	3D004-3								
	3D004-4								
	3D004-5								
3D006	3D006-1	3D006	1048	1.2	5790	11551	7521	7296	1252
	3D006-2								
	3D006-3								
	3D006-4								
	3D006-5								
	3D006-6								
3D007	3D007-1	3D007	367	1.3	7337	38296	10477	9352	4464
	3D007-2								
	3D007-3								
NA	GWS-10	GWS-10	470	0.8	5111	16685	10502	9838	2688
NA	GWS-15	GWS-15	495	1.1	7303	13318	10507	10724	899.4
NA	GWS-16	GWS-16	194	1.4	10186	17573	14985	16564	2647
GWS-26	GWS-26	GWS-26	306	0.9	9112	32272	16334	11632	7886
SP-18	SP-18-1	sp-18	739	1.2	6005	21460	11366	10727	3197
	SP-18-2								
	SP-18-3								
	SP-18-4								
TB301_03 (and TB301_01)	TB301_01-1	TB301	269	1.3	7474	11833	9157	9067	641.8
	TB301_01-2								
	TB301_01-3								

Table 5-1.10

EU9 Gamma Walkover Data

EXISTING BORING	NEW BORING	GWS ID	# of points	Avg Vel (Ft/sec)	Min cpm	Max cpm	Mean cpm	Median cpm	SD cpm
913	913-1	913	530	0.7	7410	11739	9349	9359	666
	913-2								
	913-3								

Table 5-2.11

EU10 Gamma Walkover Data

EXISTING BORING	NEW BORING	GWS ID	# of points	Avg Vel (Ft/sec)	Min cpm	Max cpm	Mean cpm	Median cpm	SD cpm
TWP937	TWP937-1	TWP 937	602	1.7	9152	19009	11740	10925	2096
	TWP937-2								
	TWP937-3								
	TWP937-4								

Table 5-1.12

EU11 Gamma Walkover Summary Table

EXISTING BORING	NEW BORING	GWS ID	# of points	Avg Vel (Ft/sec)	Min cpm	Max cpm	Mean cpm	Median cpm	SD cpm
826	826-1	826	334	1.4	6866	12266	9953	10156	1166
	826-2								
	826-3								
	826-4								
827	827-1	827, 8H001	3030	0.8	5514	26207	10625	10272	1910
	827-2								
	827-3								
	827-4								
	827-5								
8H001	8H001-1								
	8H001-2								
	8H001-3								
	8H001-4								
	8H001-5								
	8H001-6								
8A009	8A009-1	8A009	252	1.5	7461	12719	10093	10151	874.7
	8A009-2								
	8A009-3								
	8A009-4								
8H002	8H002-1	8H002	400	1.5	7969	21979	12337	11928	1925
	8H002-2								
	8H002-3								
	8H002-4								
TS812_04	TS812_04-1	GWS-11 group	1237	1.1	5151	80578	14749	11309	12664
	TS812_04-2								
	TS812_04-3								
	TS812_04-4								
GWS-11	GWS-11								
	GWS-11-1								
830	830-1								
	830-2								
NA	SP-17								
NA	GWS-12	GWS-12/13	366	1.1	5964	20494	13392	12858	3384
NA	GWS-13								

Table 5-2.13

EU12 Gamma Walkover Summary Table

EXISTING BORING	NEW BORING	GWS ID	# of points	Avg Vel (Ft/sec)	Min cpm	Max cpm	Mean cpm	Median cpm	SD cpm
GWS-27	GWS-27	GWS-27	134	1.1	9006	15837	10684	10249	1432
205	205-1	205	340	1.3	8334	15224	11441	11136	1776
	205-2								
	205-3								
	205-4								
219	219-1	219	322	1.9	8567	14250	11687	11810	858.2
	219-2								
	219-3								
	219-4								
2B002	2B002-1	2B002	598	1.1	7955	16171	11958	11496	1697
	2B002-2								
	2B002-3								
	2B002-4								
2D012	2D012-1	2D012	229	1.2	8984	17914	13828	13990	2286
	2D012-2								
	2D012-3								
	2D012-4								
2D013	2D013-1	2D013	279	1.3	8558	18179	13173	13137	2270
	2D013-2								
	2D013-3								
	2D013-4								

Table 5-2.14

Office area Gamma Walkover Data

EXISTING BORING	NEW BORING	GWS ID	# of points	Avg Vel (Ft/sec)	Min cpm	Max cpm	Mean cpm	Median cpm	SD cpm
203	203-1	203	500	1.2	6504	12078	8934	9026	1139
	203-2								
	203-3								
	203-4								
220	220-1	220	629	1.7	4894	11755	8248	8222	1913
	220-2								
	220-3								
	220-4								
221	221-1	221	566	1.3	5057	31430	9343	7114	5777
	221-2								
	221-3								
	221-4								
na	GWS-14	GWS-14	438	1.2	5193	22105	8798	6852	4252
2A003	2A003-1	2A003	545	1.4	4374	11238	6786	6432	1353
	2A003-2								
	2A003-3								
	2A003-4								
	2A003-5								
2A006	2A006-1	2A006	689	1.1	5478	31260	11461	10999	4507
	2A006-2								
	2A006-3								
	2A006-4								
	2A006-5								
	2A006-6								
TB810_02	TB810_03-1	TB810	554	2.0	8070	11937	10092	10095	613
	TB810_03-2								
	TB810_03-3								
	TB810_03-4								
2B014	2B014-1	2B014	583	0.9	8209	17902	9921	9771	1156
	2B014-2								
	2B014-3								
	2B014-4								
8A004	8A004-1	8A004	703	1.5	5506	20865	12010	12485	3063
	8A004-2								
	8A004-3								
	8A004-4								
	8A004-5								
	8A004-6								
	8A004-7								
NA	SP-9								

Table 5-2.14

Office area Gamma Walkover Data

EXISTING BORING	NEW BORING	GWS ID	# of points	Avg Vel (Ft/sec)	Min cpm	Max cpm	Mean cpm	Median cpm	SD cpm
2A008	2A008-1	2A008	1047	1.6	7711	16037	12539	12651	1504
	2A008-2								
	2A008-3								
	2A008-4								
	2A008-5								
	2A008-6								
	2A008-7								
	2A008-8								
218	218-1	218	363	1.7	5530	14014	10646	11024	1657
	218-2								
	218-3								
	218-4								

Table 5-2.15

EU14 Gamma Walkover Summary Table

EXISTING BORING	NEW BORING	GWS ID	# of points	Avg Vel (Ft/sec)	Min cpm	Max cpm	Mean cpm	Median cpm	SD cpm
816	816-1	816	280	1.3	6119	14486	9309	8950	1898
	816-2								
	816-3								
	816-4								
8B001	8B001-1	8B001	626	1.6	7095	16962	10490	9847	2109
	8B001-2								
	8B001-3								
	8B001-4								
	8B001-5								
	8B001-6								
	8B001-7								

Table 5-2.16

Manhole 6 Gamma Walkover Data

EXISTING BORING	NEW BORING	GWS ID	# of points	Avg Vel (Ft/sec)	Min cpm	Max cpm	Mean cpm	Median cpm	SD cpm
	MH06-1								
	MH06-2								
	MH06-3								
	MH06-4								
	MH06-5								
	MH06-6								
	MH06-7								
	MH06-8								
	MH06-9								
	MH06-10								
	MH06-11								
	MH06-12								
	MH06-13								
	MH06-14								
	MH06-15								
	MH06-16								
	MH06-17								
MH06/0W11B	MH06-18	MH-06	6013	1.7	4347	12799	9120	9571	1555
	MH06-19								
	MH06-20								
	MH06-21								
	MH06-22								
	MH06-23								
	MH06-24								
	MH06-25								
	MH06-26								
	MH06-27								
	MH06-28								
	MH06-29								
	MH06-30								
	MH06-31								
	MH06-32								
	MH06-33								
	MH06-34								
	MH06-35								

Table 5-2.17 GPS Data Summary

EU	EXISTING BORING	NEW BORING	GWS ID	# of points	Avg Vel (Ft/sec)	Min cpm	Max cpm	Mean cpm	Median cpm	SD cpm	Surface Material
1	503	503-1	503	584	1.1	7,115	15,500	10,435	9,726	2,033	Grass/ Soil
		503-2									
		503-3									
		503-4									
1	N/A	SP-13									
1	504	504-1	504	448	1.7	9,047	13,620	10,879	10,838	809	Grass/ Soil
		504-2									
		504-3									
		504-4									
1	5A010	5A010-1	5A010	506	1.0	9,272	17,379	13,931	14,073	1,785	Grass/ Soil
		5A010-2									
		5A010-3									
		5A010-4	5A010-4	130	0.9	8,552	15,776	12,709	13,189	2,031	
		5A010-5	5A010-5	211	1.1	8,561	18,401	14,033	13,963	2,169	
1	5A016	5A016-1	5A016	1,444	1.6	7,094	21,045	9,543	8,981	2,116	Grass/ Soil
		5A016-2									
		5A016-3									
		5A016-4									
		5A016-5									
		5A016-6									
		5A016-7									
		5A016-8									
		5A016-9	5A016-9	168	1.3	6,931	12,986	9,385	8,857	1,536	
1	5A021	5A021-1	5A021	570	1.5	8,149	18,008	12,391	12,439	2,129	Grass/ Soil
		5A021-2									
		5A021-3									
		5A021-4									
		5A021-5									
2	8F001	8F001-1	8F001	268	1.5	6,283	10,864	8,132	8,133	702	Grass/ Soil
		8F001-2									
		8F001-3	8F001	55	1.3	5,957	8,890	7,075	7,016	696	Asphalt
2	8F003	8F003-1	8F003	747	1.5	6,777	10,242	8,245	8,252	525	Grass/ Soil
		8F003-2									
		8F003-3									
		8F003-4									
		8F003-5									
		8F003-6									
		8F003-7									
		8F003-8	8F003-8	204	1.3	6,310	8,544	7,424	7,405	442	Grass/ Soil
2	8F006	8F006-1	8F006	815	1.2	8,865	18,869	12,580	12,816	1,820	Grass/ Soil
		8F006-2									
		8F006-3									
		8F006-4									
		8F006-5									
		8F006-6									
2	GWS-1	GWS-1	GWS-1	390	0.9	7,543	24,809	12,401	9,914	4,477	Grass/ Soil
2	GWS-2	GWS-2	GWS-2/3	165	1.2	7,998	14,637	10,927	10,738	1,851	Grass/ Soil
2	GWS-3	GWS-3	GWS-2/3	165	1.4	8,364	14,957	12,064	11,901	1,508	Asphalt
2	GWS-5	GWS-5	GWS-5	218	0.6	6,380	10,513	8,195	8,251	634	Grass/ Soil
2	404	404-1	404	267	1.4	4,961	13,373	8,875	9,410	1,983	Grass/ Soil
		404-2									
		404-3									

Table 5-2.17 GPS Data Summary

EU	EXISTING BORING	NEW BORING	GWS ID	# of points	Avg Vel (Ft/sec)	Min cpm	Max cpm	Mean cpm	Median cpm	SD cpm	Surface Material
2	4A007	4A007-1	4A007 4A014	330	1.3	7,941	21,005	11,023	10,182	2,507	Grass/ Soil
		4A007-2									
2	4A014	4A014-1									
2	4A003	4A003-1	4A003	333	1.0	6,637	10,992	8,909	8,920	580	Grass/ Soil
		4A003-2									
		4A003-3	4A003-3	128	1.0	8,375	12,434	10,000	9,886	841	Grass/ Soil
2	4A013	4A013-1	4A013	736	1.2	8,778	19,852	12,349	11,852	2,442	Grass/ Soil
		4A013-2									
		4A013-3									
		4A013-4									
		4A013-5	4A013-5	119	1.9	9,618	15,915	12,234	12,158	1,305	Grass/ Soil
		4A013-6	4A013-6	75	1.6	8,977	15,422	12,247	12,466	1,598	Asphalt
			4A013-6	100	1.4	10,051	16,406	12,968	12,963	1,396	Grass/ Soil
		4A013-7	4A013-7	202	1.1	8,496	20,158	11,870	11,228	2,068	Grass/ Soil
2	4B001	4B001-1	4B001	108	1.2	5,041	11,051	8,865	9,485	1,558	Grass/ Soil
2	N/A	SP-14	SP-14	203	0.9	8,813	27,402	13,909	11,817	4,811	Grass/ Soil
2	N/A	SP-14-1	SP-14-1	82	1.7	8,793	13,430	10,587	10,462	926	Grass/ Soil
2	N/A	SP-16	SP-16	349	1.3	7,759	22,390	15,701	16,443	4,332	Grass/ Soil
3	4B009	4B009-1	4B009	390	1.2	8,272	37,638	15,223	10,804	7,968	Grass/ Soil
		4B009-2									
		4B009-3									
		4B009-4									
3	4B021	4B021-1	4B010 4B021	721	0.9	7,797	18,783	11,041	10,225	2,329	Grass/ Soil
		4B021-2									
		4B021-3									
		4B021-4									
3	4B010	4B010-1									
		4B010-2									
		4B010-3									
		4B010-4	4B010-4	92	1.4	9,693	15,909	11,168	10,867	1,091	Grass/ Soil
3	4B014	4B014-1	4B014	120	1.3	6,540	9,988	7,983	7,970	731	Grass/ Soil
		4B014-2									
		4B014-3									
		4B014-4	4B014-4	180	1.0	8,430	11,988	9,918	9,845	593	
		4B014-5	4B014-5	137	1.3	8,724	18,113	10,999	10,358	1,975	
		4B014-6	4B014-6	127	1.4	9,649	29,218	13,987	12,227	4,175	
		4B014-7	4B014-7	152	1.3	8,402	28,427	10,615	10,219	2,254	
		4B014-8	4B014-8	112	1.4	7,505	12,292	9,722	9,694	868	
3	4B017	4B017-1	4B017	313	1.0	6,116	11,808	8,731	8,986	1,434	
		4B017-2									
		4B017-3									
3	GWS-8	GWS-8	GWS-8	273	1.2	8,686	14,662	10,768	10,455	1,262	Grass/ Soil
3	GWS-9	GWS-9	GWS-9	222	0.8	9,440	28,853	15,661	13,330	5,166	Grass/ Soil
3	NA	SP-15									
3	GWS-09	GWS-09-1	GWS-09-1	84	1.7	9,292	12,709	10,633	10,486	679	Grass/ Soil
		GWS-09-2	GWS-09-2	110	1.4	9,313	33,525	15,667	14,324	5,317	
		GWS-09-3	GWS-09-3	113	1.4	9,364	15,581	10,428	10,287	831	
3	TB411_03	TB411_03-1	TB411_03	347	1.4	7,926	12,896	10,213	10,242	859	Grass/ Soil
		TB411_03-2									
		TB411_03-3									
		TB411_03-4									

Table 5-2.17 GPS Data Summary

EU	EXISTING BORING	NEW BORING	GWS ID	# of points	Avg Vel (Ft/sec)	Min cpm	Max cpm	Mean cpm	Median cpm	SD cpm	Surface Material
4	4C002	4C002-1	4C002	307	1.2	9,123	18,014	12,507	11,484	2,551	Grass/ Soil
		4C002-2									
		4C002-3									
		4C002-4									
4	GWS-17	GWS-17	GWS-17	157	1.0	6,379	9,293	7,784	7,647	617	Concrete
			GWS-17	186	1.0	7,325	12,062	9,031	8,966	878	Grass/ Soil
4	GWS-25	GWS-25	GWS-25	286	1.0	8,894	18,212	14,760	15,086	1,989	Grass/ Soil
4	TB408_02	TB408_02-1	TB408_02	123	1.0	6,895	9,238	8,066	7,945	608	Grass/ Soil
5	4G002	4G002-1	4G002	859	1.5	6,251	13,255	8,793	8,493	1,320	Grass/ Soil
		4G002-2									
		4G002-3									
		4G002-4									
5	6A001	6A001-1	6A001	1,189	1.1	7,814	50,472	11,981	9,371	8,758	Grass/ Soil
		6A001-2									
		6A001-3									
		6A001-4									
		6A001-5									
		6A001-6									
6	606	606-1	606	546	1.4	7,646	15,686	10,272	9,861	1,428	Grass/ Soil
		606-2									
		606-3									
		606-4		69	1.9	8,822	13,746	11,630	11,837	936	Asphalt
6	NA	SP-1	6B005	336	1.1	8,587	62,183	18,175	12,908	14,096	Grass/ Soil
	6B005	6B005-1									
		6B005-2									
		6B005-3									
		6B005-4		196	2.2	8,035	41,316	10,992	10,133	3,443	Asphalt
		6B005-5	6B005-5	43	1.4	9,091	12,576	10,872	10,753	817	Grass/ Soil
				65	1.5	8,486	11,902	9,664	9,503	712	Asphalt
		6B005-6	6B005-6	146	1.3	8,687	13,889	10,090	9,849	951	Grass/ Soil
		6B005-7	6B005-7	54	1.3	9,408	15,035	11,724	11,371	1,460	Grass/ Soil
				83	1.6	8,233	14,934	10,329	10,129	1,522	Asphalt
6	828	828-1	828	1,178	1.7	6,474	12,971	8,866	8,504	1,215	Grass/ Soil
		828-2									
		828-3									
		828-4									
		828-5	828-5	125	2.0	7,319	11,979	9,160	9,011	914	
6	829	829-1	829	809	1.3	7,464	21,643	11,495	10,612	2,816	Grass/ Soil
		829-2									
		829-3									
		829-4									
6	EU061	EU061-1	EU61	626	1.5	6,151	12,938	9,036	8,826	1,179	Grass/ Soil
		EU061-2									
		EU061-3									
		EU061-4									
6	GWS-18	GWS-18	GWS-18	678	1.4	7,862	13,376	9,780	9,523	1,054	Grass/ Soil
		GWS-18-1									
		GWS-18-2									
		GWS-18-3									
		GWS-18-4									

Table 5-2.17 GPS Data Summary

EU	EXISTING BORING	NEW BORING	GWS ID	# of points	Avg Vel (Ft/sec)	Min cpm	Max cpm	Mean cpm	Median cpm	SD cpm	Surface Material
6	GWS-19	GWS-19	GWS-19	1,012	1.0	7,918	26,443	12,609	9,932	5,201	Grass/ Soil
		GWS-19-1									
		GWS-19-2									
		GWS-19-3									
		GWS-19-4									
6	GWS-20	GWS-20	GWS-20	88	2.3	8,845	12,993	10,217	9,947	956	Asphalt
			GWS-20	170	1.3	8,661	14,540	10,066	9,674	1,144	Grass/ Soil
6	GWS-21	GWS-21	GWS-21-24	994	1.3	8,045	16,016	12,547	12,949	1,832	Grass/ Soil
6	GWS-22	GWS-22									
6	GWS-23	GWS-23									
6	GWS-24	GWS-24									
7	8D003	8D003-1	8D003	673	1.7	10,809	18,299	13,228	12,957	1,319	Grass/ Soil
		8D003-2									
		8D003-3									
		8D003-4									
7	8D004	8D004-1	8D004	982	1.5	8,531	31,792	12,380	12,305	2,353	Grass/ Soil
		8D004-2									
		8D004-3									
		8D004-4									
		8D004-5									
		8D004-6									
		8D004-7									
7	8D006	8D006-1	8D006	519	1.5	6,638	17,092	11,158	11,345	1,668	Grass/ Soil
		8D006-2									
		8D006-3									
		8D006-4									
		8D006-5									
		8D006-7		135	1.4	5,809	11,866	8,116	7,492	1,717	Asphalt
		8D006-6	8D006-6	124	1.6	6,303	11,571	8,681	8,748	855	Grass/ Soil
7	8D007	8D007-1	8D007	763	1.2	9,323	20,124	13,563	12,903	2,052	Grass/ Soil
		8D007-2									
		8D007-3									
		8D007-4									
		8D007-5	8D007-5	136	1.8	8,081	14,037	10,447	10,303	1,115	Grass/ Soil
7	8D009	8D009-1	8D009	625	1.3	5,929	33,951	12,417	10,972	4,611	Grass/ Soil
		8D009-2									
		8D009-3									
		8D009-4									
		8D009-5	8D009-5	71	1.4	9,369	15,392	10,602	10,475	1,038	Grass/ Soil
		8D009-6	8D009-6	140	1.8	8,877	12,539	10,014	9,977	589	Grass/ Soil
		8D009-7	8D009-7	134	2.0	8,408	11,238	9,598	9,584	518	Grass/ Soil
7	8D016	8D016-1	8D016	498	1.3	9,719	15,706	12,096	12,007	1,134	Grass/ Soil
		8D016-2									
		8D016-3									
		8D016-4									
		8D016-5	8D016-5	135	1.7	9,145	17,171	10,996	10,706	1,224	Grass/ Soil
		8D016-6	8D016-6	130	2.0	8,458	11,144	9,662	9,613	455	Grass/ Soil
		8D016-7	8D016-7	114	1.9	9,195	11,485	10,328	10,296	507	Grass/ Soil
7	8E003	8E003-1	8E003	388	1.5	8,280	12,793	9,858	9,662	858	Grass/ Soil
		8E003-2									
		8E003-3									
		8E003-4		218	1.4	10,007	12,317	11,311	11,326	473	Asphalt

Table 5-2.17 GPS Data Summary

EU	EXISTING BORING	NEW BORING	GWS ID	# of points	Avg Vel (Ft/sec)	Min cpm	Max cpm	Mean cpm	Median cpm	SD cpm	Surface Material
7	GWS-04	GWS-04	GWS-04	209	1.1	5,535	12,879	9,846	9,872	1,362	Grass/ Soil
	GWS-6	GWS-06	GWS-06	756	1.2	5,503	33,105	13,560	11,788	5,522	Grass/ Soil
		GWS-06-1									
		GWS-06-2									
7		GWS-06-3	GWS-06-3	205	1.8	8,831	21,843	10,183	9,830	1,616	
7	GWS-07	GWS-07	GWS-07	292	1.3	6,021	12,491	9,407	9,373	1,044	Grass/ Soil
7	TB802_01	TB802_01-1	TB802_01	570	1.5	8,278	16,259	10,639	10,008	1,685	Grass/ Soil
		TB802_01-2									
		TB802_01-3									
		TB802_01-4									
		TB802_01-5	TB802_01-5	115	1.8	8,667	13,748	10,530	10,309	1,098	
		TB802_01-6	TB802_01-6	111	1.8	8,934	11,867	10,094	9,974	637	
7	TB802A_01	TB802A_01-1	tb802A	588	1.7	8,285	13,042	9,819	9,757	650	Grass/ Soil
		TB802A_01-2									
		TB802A_01-3									
		TB802A_01-4									
8	3A005	3A005-1	3A023, 3A024	2,373	1.4	6,546	19,478	11,609	11,363	1,538	Grass/ Soil
		3A005-2									
		3A005-3									
		3A005-4									
8	3A006	3A006-1									
		3A006-2									
		3A006-3									
		3A006-4									
8	3A007	3A007-1	3A007	155	1.1	10,345	13,751	11,935	11,949	706	Grass/ Soil
		3A007-2									
		3A007-3									
8	3A017	3A017-1	3A017	473	1.4	6,191	18,558	12,108	12,031	2,322	Asphalt
		3A017-2									
		3A017-3									
		3A017-4									
		3A017-5	3A017-5	75	1.5	9,908	13,501	11,608	11,181	1,156	Grass/ Soil
				39	1.6	10,203	12,072	10,991	10,848	556	Asphalt
		3A017-6	3A017-6	96	1.3	11,257	13,437	12,538	12,646	571	Grass/ Soil
		3A017-7	3A017-7	118	1.4	9,754	12,968	11,614	11,797	850	Grass/ Soil
8	3A020	3A020-1									Grass/ Soil
		3A020-2									
		3A020-3									
		3A020-4									
		3A020-5	3A020-5	92	1.7	10,729	15,512	12,831	12,641	1,198	Grass/ Soil
8	3A023	3A023-1									Grass/ Soil
		3A023-2									
		3A023-3	3A023, 3A024	650	1.8	5,199	15,954	9,710	8,065	3,364	Asphalt
8	308	308-1	308-1	196	1.1	7,092	10,713	9,100	9,211	918	Grass/ Soil
		308-2									
8	3C008	3C008-1	3C008	230	1.3	6,245	11,370	8,686	9,033	1,497	Grass/ Soil
		3C008-2									
		3C008-3	3C008	108	1.3	7,323	8,382	7,754	7,745	268	Concrete
8	309	309-1	309-1	126	1.2	6,971	10,032	8,943	9,046	624	Grass/ Soil

Table 5-2.17 GPS Data Summary

EU	EXISTING BORING	NEW BORING	GWS ID	# of points	Avg Vel (Ft/sec)	Min cpm	Max cpm	Mean cpm	Median cpm	SD cpm	Surface Material
8	312	312-1	312	274	1.1	8,883	14,635	11,689	11,684	1,118	Grass/ Soil
		312-2	312, 3A013	681	1.6	8,276	15,491	11,606	11,521	1,237	Grass/ Soil
		312-3									
		312-4									
		312-5									
8	3A013	3A013-1									
		3A013-2									
8	314	314-1	314	278	1.5	5,132	14,497	8,388	8,665	1,651	Grass/ Soil
		314-2									
		314-3									
		314-4									
8	3A002	3A002-1	3A002	627	1.2	6,957	15,381	10,483	10,501	1,220	Grass/ Soil
		3A002-2									
		3A002-3									
		3A002-4									
8	3B003	3B003-1	3B003	215	1.3	6,346	13,568	10,044	10,270	1,374	Grass/ Soil
		3B003-2									
		3B003-3	3B003-3	129	1.4	6,687	12,708	9,827	10,146	1,428	
		3B003-4	3B003-4	71	1.7	4,850	7,825	6,232	6,175	587	
8	3B004	3B004-1	3B004	325	1.3	7,804	15,198	10,895	10,704	1,235	
		3B004-2									
		3B004-3									
8	3B011	3B011-1	3B011-1	61	1.4	8,998	15,626	11,986	11,812	1,630	Grass/ Soil
				53	1.2	5,997	10,046	7,376	7,026	1,021	Asphalt
		3B011-2	3B011-2	118	1.2	6,676	11,795	9,177	9,101	1,114	Grass/ Soil
		3B011-3	3b011-3	124	1.0	8,413	12,705	10,205	9,962	950	
		3B011-4	3B011-4	73	1.5	5,919	17,210	10,434	11,088	2,560	
		3B011-4	3B011-4	92	1.6	5,423	8,081	6,502	6,450	607	Asphalt
8	3B013	3B013-1	3B013	309	1.2	8,929	14,650	10,588	10,373	872	Grass/ Soil
		3B013-2									
		3B013-3									
		3B013-4									
8	3B015	3B015-1	3B015	444	1.1	10,321	12,187	11,076	11,038	360	Grass/ Soil
		3B015-2									
		3B015-3									
		3B015-4									
8	3C006	3C006-1	3C006	246	1.3	6,594	10,002	8,455	8,766	1,041	Grass/ Soil
		3C006-2									
		3C006-3		60	1.1	7,479	8,310	7,952	7,963	219	Concrete
		3C006-4	3C006-4	133	1.4	6,576	10,893	9,392	9,721	996	Grass/ Soil
8	3C007	3C007-1	3C007	46	1.0	7,040	8,388	7,705	7,653	326	Concrete
		3C007-2	3C007-2	197	1.1	6,345	10,517	8,741	9,381	1,364	Grass/ Soil
8	3C011	3C011-1	3C011	113	1.1	5,445	9,078	7,094	7,346	898	Grass/ Soil
8	3C014	3C014-1	3C014	651	1.2	6,428	14,568	9,932	9,759	1,275	Grass/ Soil
		3C014-2									
		3C014-3									
		3C014-4									
		3C014-5									
		3C014-6		125	1.1	6,333	9,367	7,062	6,881	647	Asphalt
8	3D001	3D001-1	3D001	327	1.3	7,810	19,289	11,747	10,728	2,520	Grass/ Soil
		3D001-2									
		3D001-3									
		3D001-4									
		3D004-1									

Table 5-2.17 GPS Data Summary

EU	EXISTING BORING	NEW BORING	GWS ID	# of points	Avg Vel (Ft/sec)	Min cpm	Max cpm	Mean cpm	Median cpm	SD cpm	Surface Material
8	3D004	3D004-2	3D004	616	1.0	8,098	20,373	12,017	10,981	2,912	Grass/ Soil
		3D004-3									
		3D004-4									
		3D004-5	3D004-5	110	1.4	8,807	18,435	10,974	10,710	1,645	
8	3D006	3D006-1	3D006	582	1.2	5,850	10,690	7,379	7,208	1,106	Grass/ Soil
		3D006-2									
		3D006-3									
		3D006-4		154	1.3	5,790	7,213	6,381	6,341	288	Asphalt
		3D006-5		130	1.0	6,969	8,552	7,706	7,701	353	Concrete
		3D006-6	3D006-6	182	1.2	5,832	11,551	8,810	8,824	1,456	Grass/ Soil
8	3D007	3D007-1	3D007	367	1.3	7,337	38,296	10,477	9,352	4,464	Grass/ Soil
		3D007-2									
		3D007-3									
8	GWS-10	GWS-10	GWS-10	178	0.9	6,518	11,121	8,283	8,272	749	Concrete
				292	0.8	5,111	16,685	11,854	12,331	2,542	Grass/ Soil
8	GWS-15	GWS-15	GWS-15	252	1.0	7,303	13,318	10,189	10,215	1,158	Concrete
				243	1.2	10,314	11,330	10,837	10,862	213	Grass/ Soil
4	GWS-16	GWS-16	GWS-16	60	1.4	10,186	12,070	11,096	11,038	493	Grass/ Soil
				157	1.0	6,379	9,293	7,784	7,647	617	Concrete
8	GWS-26	GWS-26	GWS-26	306	0.9	9,112	32,272	16,334	11,632	7,886	Grass/ Soil
8	SP-18	SP-18-1	SP-18	739	1.2	6,005	21,460	11,366	10,727	3,197	Grass/ Soil
		SP-18-2									
		SP-18-3									
		SP-18-4									
8	TB301_03 (and TB301_01)	TB301_01-1	TB301	269	1.3	7,474	11,833	9,157	9,067	642	Grass/ Soil
		TB301_01-2									
		TB301_01-3									
9	913	913-1	913	530	0.7	7,410	11,739	9,349	9,359	666	Grass/ Soil
		913-2									
		913-3									
10	TWP937	TWP937-1	TWP 937	602	1.7	9,152	19,009	11,740	10,925	2,096	Grass/ Soil
		TWP937-2									
		TWP937-3									
		TWP937-4									
11	2A003	2A003-1	2A003	246	1.4	4,721	11,238	6,685	6,379	1,188	Grass/ Soil
		2A003-2									
		2A003-3		33	1.4	4,374	5,987	5,193	5,150	409	Asphalt
		2A003-4	2A003-4	130	1.3	4,959	10,904	7,613	7,903	1,539	Grass/ Soil
		2A003-5	2A003-5	136	1.4	4,896	9,768	6,566	6,282	1,081	Grass/ Soil
11	2A006	2A006-1	2A006	256	1.6	7,720	14,900	11,321	11,285	1,369	Grass/ Soil
		2A006-2									
		2A006-3									
		2A006-4									
		2A006-5	2A006-5	88	0.8	7,908	13,947	9,921	9,229	1,474	Grass/ Soil
				78	1.0	5,478	9,437	6,709	6,425	947	Asphalt
		2A006-6	2A006-6	267	0.8	7,640	31,260	13,492	11,389	6,181	Grass/ Soil
11	826	826-1	826	334	1.4	6,866	12,266	9,953	10,156	1,166	Grass/ Soil
		826-2									
		826-3									
		826-4									

Table 5-2.17 GPS Data Summary

EU	EXISTING BORING	NEW BORING	GWS ID	# of points	Avg Vel (Ft/sec)	Min cpm	Max cpm	Mean cpm	Median cpm	SD cpm	Surface Material
11	827	827-1	827, 8H001	2,451	0.6	7,095	26,207	10,642	10,205	1,936	Grass/ Soil
		827-2									
		827-3									
		827-4									
		827-5									
11	8H001	8H001-1									
		8H001-2									
		8H001-3									
		8H001-4									
		8H001-5									
		8H001-6		579	1.3	5,514	13,791	10,554	10,877	1,798	Asphalt
11	8A004	8A004-1	8A004	376	1.5	6,121	20,865	13,842	13,552	2,445	Grass/ Soil
		8A004-2									
		8A004-3									
		8A004-4									
		8A004-5	8A004-5	123	1.6	5,780	11,929	9,127	9,862	1,784	Grass/ Soil
		8A004-6	8A004-6	92	1.6	6,256	12,041	9,359	9,692	1,429	Grass/ Soil
		8A004-7	8A004-7	112	1.6	5,506	14,362	11,205	12,247	2,626	Grass/ Soil
11	8A009	8A009-1	8A009	252	1.5	7,461	12,719	10,093	10,151	875	Grass/ Soil
		8A009-2									
		8A009-3									
		8A009-4									
11	8H002	8H002-1	8H002	400	1.5	7,969	21,979	12,337	11,928	1,925	Grass/ Soil
		8H002-2									
		8H002-3									
		8H002-4									
11	TB810_02	TB810_03-1	TB810	554	2.0	8,070	11,937	10,092	10,095	613	Grass/ Soil
		TB810_03-2									
		TB810_03-3									
		TB810_03-4									
11	TS812_04	TS812_04-1	GWS-11 group	1,237	1.1	5,151	80,578	14,749	11,309	12,664	Grass/ Soil
		TS812_04-2									
		TS812_04-3									
		TS812_04-4									
11	GWS-11	GWS-11									
		GWS-11-1									
11	830	830-1									
		830-2									
11	NA	SP-17									
11	NA	SP-9									
11	NA	GWS-12	GWS-12/13	366	1.1	5,964	20,494	13,392	12,858	3,384	Grass/ Soil
11	NA	GWS-13									
12	2A008	2A008-1	2A008	427	1.7	9,504	15,950	12,559	12,553	1,502	Grass/ Soil
		2A008-2									
		2A008-3									
		2A008-4		101	1.5	10,481	14,406	12,930	13,106	977	Asphalt
		2A008-5	2A008-5	146	1.4	7,711	14,673	11,320	11,170	1,416	Grass/ Soil
		2A008-6	2A008-6	99	1.5	10,090	14,225	12,138	12,480	1,237	
		2A008-7	2A008-7	142	1.1	11,752	16,037	14,177	14,312	822	
		2A008-8	2A008-8	132	1.8	9,785	13,615	12,063	12,294	934	
12	GWS-27	GWS-27	GWS-27	134	1.1	9,006	15,837	10,684	10,249	1,432	

Table 5-2.17 GPS Data Summary

EU	EXISTING BORING	NEW BORING	GWS ID	# of points	Avg Vel (Ft/sec)	Min cpm	Max cpm	Mean cpm	Median cpm	SD cpm	Surface Material
12	205	205-1	205	200	1.2	8,334	15,141	10,289	9,968	1,157	Grass/ Soil
		205-2									
		205-3									
		205-4		140	1.5	10,585	15,224	13,085	13,250	1,071	Asphalt
12	218	218-1	218	363	1.7	5,530	14,014	10,646	11,024	1,657	Grass/ Soil
		218-2									
		218-3									
		218-4									
12	219	219-1	219	322	1.9	8,567	14,250	11,687	11,810	858	Grass/ Soil
		219-2									
		219-3									
		219-4									
12	2B002	2B002-1	2B002-1	177	1.1	9,772	12,268	10,898	10,902	520	Grass/ Soil
		2B002-2	2B002-2	123	1.2	7,955	12,799	10,513	10,716	1,159	
		2B002-3	2B002-3	172	0.9	10,313	16,171	13,495	13,872	1,316	
		2B002-4	2B002-4	126	1.1	9,229	15,601	12,761	12,861	1,464	
12	2D012	2D012-1	2D012	146	1.3	8,984	17,914	13,224	13,180	2,125	Grass/ Soil
		2D012-2									
		2D012-3									
		2D012-4		83	1.2	9,199	17,770	14,889	15,559	2,180	Asphalt
12	2D013	2D013-1	2D013	216	1.4	8,558	18,179	12,877	12,602	2,396	Grass/ Soil
		2D013-2									
		2D013-3									
		2D013-4		63	1.3	11,029	16,327	14,186	14,653	1,361	Asphalt
13	203	203-1	203	500	1.2	6,504	12,078	8,934	9,026	1,139	Grass/ Soil
		203-2									
		203-3									
		203-4									
13	220	220-1	220	419	1.5	5,635	11,755	9,293	9,721	1,428	Grass/ Soil
		220-2									
		220-3									
		220-4		210	2.0	4,894	8,214	6,161	6,118	590	Asphalt
13	221	221-1	221	258	1.0	5,557	31,430	12,574	9,257	7,170	Grass/ Soil
		221-2									
		221-3		99	1.8	5,121	9,667	6,728	6,510	930	Asphalt
		221-4		209	1.3	5,057	17,541	6,593	5,994	1,706	Concrete
13	na	GWS-14	GWS-14	438	1.2	5,193	22,105	8,798	6,852	4,252	Grass/ Soil
14	2B014	2B014-1	2B014	583	0.9	8,209	17,902	9,921	9,771	1,156	Grass/ Soil
		2B014-2									
		2B014-3									
		2B014-4									
14	816	816-1	816	280	1.3	6,119	14,486	9,309	8,950	1,898	Grass/ Soil
		816-2									
		816-3									
		816-4									
14	8B001	8B001-1	8B001	363	1.5	7,095	16,492	10,583	9,842	2,096	Grass/ Soil
		8B001-2									
		8B001-3									
		8B001-4									
		8B001-5									
		8B001-6									
		8B001-7		263	1.7	7,100	16,962	10,361	9,848	2,125	Asphalt

Table 5-2.17 GPS Data Summary

EU	EXISTING BORING	NEW BORING	GWS ID	# of points	Avg Vel (Ft/sec)	Min cpm	Max cpm	Mean cpm	Median cpm	SD cpm	Surface Material
	MH06/0W11B	MH06-1	EU-10	349	1.2	4,347	10,991	7,657	7,193	1,696	Grass/ Soil
		MH06-2	MH6-S1	596	1.7	4,546	8,915	6,390	6,240	828	
		MH06-3	MH6-S2	955	1.3	5,681	12,449	9,621	9,861	1,215	
		MH06-4	MH6-S3	342	1.8	5,354	11,983	9,778	10,152	1,309	
		MH06-5	MH6-S4	1,061	1.8	8,325	12,297	9,951	9,903	623	
		MH06-6	MH6-S5	1,562	1.9	7,263	12,799	9,982	9,917	726	
		MH06-7	MH6-S7	736	1.9	5,699	12,056	8,803	9,092	1,257	
		MH06-8	MH6	412	2.1	5,825	10,402	7,753	7,558	1,031	
		MH06-9									
		MH06-10									
		MH06-11									
		MH06-12									
		MH06-13									
		MH06-14									
		MH06-15									
		MH06-16									
		MH06-17									
		MH06-18									
		MH06-19									
		MH06-20									
		MH06-21									
		MH06-22									
		MH06-23									
		MH06-24									
		MH06-25									
		MH06-26									
		MH06-27									
		MH06-28									
		MH06-29									
		MH06-30									
		MH06-31									
		MH06-32									
		MH06-33									
		MH06-34									
		MH06-35									
	MH6 Post Excavation	MH6 Post Excavation	MH6 Post-1	1,245	1.5	5,128	14,092	9,814	10,162	1,576	Grass/ Soil
			MH6 Post-2	119	1.4	5,066	11,609	7,870	8,044	1,657	
	Background	Background	Background	1,157	1.8	6,386	18,095	9,958	9,701	1,508	Grass/ Soil
				910	1.9	5,343	18,596	11,749	11,930	2,114	Asphalt

Appendix E-5-3

Gamma Survey Field Sheets

5

GPS Gamma Survey Log

Site	NFSS 2013 Investigation	Meter	2221
		SN #	147508
Comments		Probe	44-10
		SN#	149451
Survey Date	10/31/13	Cal	10/28/13

Area ID	Boring ID	Location Description	File Name	Tech	Processed & checked	Notes
test		R103106A		[redacted]		
		R103107A				
		Test				
		N103110A				
BKGD		Background grass				
		BKG2				
		BKASP1				
		BKA2				

GPS 2014 Gamma Survey Log

Ludlum 2221 SN#147508
Probe 44-10 SN# 149451
Cal. date 10/28/2013

Survey Date	EU	Existing Sample	File Name	Surveyor	Note	Processed & Checked
6/17/2014	11	2A003-5	2A0035	[redacted]		x
6/17/2014	11	2B003-4	230034	[redacted]		x
6/17/2014	11	GWS11-1	GWS111	[redacted]		x
6/17/2014	11	2A008-5	2A0085	[redacted]		x
6/17/2014	11	2A008-8	2A0088	[redacted]		x
6/17/2014	11	8A004-5	8A0045	[redacted]		x
6/17/2014	11	8A004-6	8A0046	[redacted]		x
6/17/2014	11	8A004-7	8A0047	[redacted]		x
6/17/2014	11	2A006-6	2A006 6	[redacted]	Elevated area northwest of flag	x
6/17/2014	11		2A006-6	[redacted]	No Data	x
6/17/2014	11	2A006-5	2A006-5G	[redacted]	Grass	x
6/17/2014	11		2A006-5A	[redacted]	Asphalt	x
6/18/2014	12	2A008-6	2A0086	[redacted]	Ditch to the east	x
6/18/2014	12	2A008-7	2A0087	[redacted]	Tall Weeds	x
6/18/2014	12	2B002-3	2B0023	[redacted]	Standing water in road	x
6/18/2014	12	2B002-4	2B0024	[redacted]	Standing water in road	x
6/18/2014	12	GWS-27	GWS-27	[redacted]		x
6/18/2014	14	8B001-5	8B001A	[redacted]	Asphalt for pt 5&7	x
6/18/2014	14	8B001-7	8B001Gall	[redacted]	Grass area for all 3 ditch on north edge	x
6/18/2014	14	8B001-6		[redacted]		x
6/18/2014	8	3D004-5	3D0045	[redacted]	survyed between fence and ditch	x
6/18/2014	8	GWS-26	GWS-26	[redacted]	moved pt 1 ft northeast to hot spot	x
6/18/2014	8	SP-18-1	SP18A	[redacted]	Surveyed together foundation to the east brush pile to the north	x
6/18/2014	8	SP-18-2		[redacted]		x
6/18/2014	8	SP-18-3		[redacted]		x
6/18/2014	8	SP-18-4		[redacted]		x
6/18/2014	8	3C014-5	3C01456	[redacted]	Surveyed together, large wood pile and pond to the south	x
6/18/2014	8	3C014-6		[redacted]		x
6/18/2014	8	3D006-5	3D00656	[redacted]	Moved off Concrete Surveyed together	x
6/18/2014	8	3D006-6		[redacted]		x
6/18/2014	8	3A017-5	3A0175	[redacted]	Grass	x
6/18/2014	8		3A0175A	[redacted]	Asphalt	x
6/18/2014	8	3A017-6	3A0176	[redacted]		x
6/18/2014	8	3A017-7	3A0177	[redacted]		x
6/19/2014	7	8D004-5	8D0046	[redacted]	Surveyed together water in the middle	x
6/19/2014	7	8D004-6		[redacted]		x
6/19/2014	7	8D004-7		[redacted]		x
6/19/2014	7	8D006-5	8D00657a	[redacted]	Survyed separate files for grass and asphalt	x
6/19/2014	7	8D006-6	8D0066	[redacted]		x
6/19/2014	7	8D006-7	8D00657g	[redacted]	Survyed separate files for grass and asphalt	x
6/19/2014	7	8D007-5	8D0075	[redacted]	No data	x
6/19/2014	7	GWS-06-1	GWS0612	[redacted]	Surveyed together	x
6/19/2014	7	GWS-06-2	GWS0612x	[redacted]		x
6/19/2014	7	GWS-06-2	GWS0612take2	[redacted]		x
6/19/2014	7	GWS-06-3	GWS063	[redacted]		x
6/19/2014	7	8D009-5	8D0095	[redacted]		x
6/19/2014	7	8D009-6	8D0096	[redacted]		x
6/19/2014	7	8D009-7	8D0097	[redacted]		x
6/19/2014	7	8D016-5	8d165	[redacted]		x

GPS 2014 Gamma Survey Log

Ludlum 2221 SN#147508
Probe 44-10 SN# 149451
Cal. date 10/28/2013

Survey Date	EU	Existing Sample	File Name	Surveyor	Note	Processed & Checked
6/19/2014	7	8D016-6	8d0166	[redacted]		x
6/19/2014	7	8D016-7	8d0167	[redacted]		x
6/19/2014	7	TB802_01-5	TB8020105	[redacted]		x
6/19/2014	7	TB802_01-6	TB802-16	[redacted]		x
6/19/2014	8	312-4	31245	[redacted]	Surveyed together lots of downed tree limbs and water	x
6/19/2014	8	312-5		[redacted]		x
6/19/2014	8	3A020-5	3A0205	[redacted]		x
6/19/2014	8	3B003-3	3B0033	[redacted]	backs up on to tree	x
6/19/2014	8	3B003-4	3B0034	[redacted]		x
6/19/2014	8	3B011-4	3B114a	[redacted]		x
6/19/2014	8	3B011-4	3B114g	[redacted]		x
6/20/2014	1	5A010-4	5A0104	[redacted]		x
6/20/2014	1	5A010-5	5A0105	[redacted]		x
6/20/2014	1	5A016-5	5A0165678	[redacted]	Surveyed Together	x
6/20/2014	1	5A016-6		[redacted]		x
6/20/2014	1	5A016-7		[redacted]		x
6/20/2014	1	5A016-8		[redacted]		x
6/20/2014	1	5A016-9	5A0169	[redacted]		x
6/20/2014	1	5A021-5	5A0215	[redacted]		x
6/20/2014	2	4A003-3	4A0033	[redacted]		x
6/20/2014	2	4A013-6	4A135g	[redacted]		x
6/20/2014	2	4A013-6	4A0135A	[redacted]		x
6/20/2014	2	4A013-7	4A0137	[redacted]		x
6/20/2014	2	8F003-5	8f00356	[redacted]	Surveyed Together	x
6/20/2014	2	8F003-6		[redacted]		x
6/20/2014	2	8F003-7		[redacted]		x
6/20/2014	2	8F003-8	8F0038	[redacted]		x
6/20/2014	4	GWS-25	GWS25	[redacted]		x
6/20/2014	6	6B005-5	6b0055g	[redacted]		x
6/20/2014	6	6B005-5	6b0055a	[redacted]		x
6/20/2014	6	6B005-6	6b0056	[redacted]		x
6/20/2014	6	6B005-7	6b0057g	[redacted]		x
6/20/2014	6	6B005-7	6b0057a	[redacted]		x
6/20/2014	8	3B011-3	3B0113	[redacted]		x
6/23/2014	8	3C0064	3C0064	[redacted]		x
6/23/2014	8	3d0066	3C0064MOVE	[redacted]		x
6/23/2014	8		3D0066OPT	[redacted]		x
6/23/2014	2	4A013-5	4A0136	[redacted]		x
6/23/2014	2	SP-14-1	SP141	[redacted]		x
6/23/2014	3	4B010-4	4B0104	[redacted]		x
6/23/2014	3	4B014-5	4B0145	[redacted]		x
6/23/2014	3	4B014-6	4B0146	[redacted]		x
6/23/2014	3	4B014-7	4B0147	[redacted]		x
6/23/2014	3	4B014-8	4B0148	[redacted]		x
6/23/2014	3	GWS-09-1	GWS091	[redacted]		x
6/23/2014	3	GWS-09-2	GWS092	[redacted]		x
6/23/2014	3	GWS-09-3	GWS093	[redacted]		x
6/23/2014	5	6A001-5	6Q0015	[redacted]		x
6/23/2014	5	6A001-6	6A016r062312A	[redacted]		x
6/23/2014	6	828-5	8285	[redacted]		x

GPS 2014 Gamma Survey Log

Ludlum 2221 SN#147508
Probe 44-10 SN# 149451
Cal. date 10/28/2013

Survey Date	EU	Existing Sample	File Name	Surveyor	Note	Processed & Checked
6/23/2014	6	GWS-18-1	gws18ALL	[redacted]		x
6/23/2014	6	GWS-18-2				x
6/23/2014	6	GWS-18-3				x
6/23/2014	6	GWS-18-4				x
6/23/2014	6	GWS-19-1	GWS191			x
6/23/2014	6	GWS-19-2				x
6/23/2014	6	GWS-19-3				x
6/23/2014	6	GWS-19-4				x

GPS Gamma Survey Log

Site	NFSS 2013 Investigation	Meter	2221
		SN #	147508
Comments		Probe	44-10
		SN#	149451
Survey Date	11/1/13	Cal	10/28/13

Area ID	Boring ID	Location Description	File Name	Tech	Processed & checked	Notes
BKGD		BKASP3	Background	[redacted]		1 Foot
↓		N110109A	BackGround			↓
EU6	multiple	EU Grass South				
↓	↓	EU6A5828				
		EU6B				
		EU6D				
		EU6828				
		EU6828A		↓		

GPS Gamma Survey Log

Site	NFSS 2013 Investigation	Meter	2241
		SN #	147568
Comments		Probe	44-10
		SN#	149457
Survey Date	11/4/13	Cal	10/28/13

Area ID	Boring ID	Location Description	File Name	Tech	Processed & checked	Notes
Test	N/A	Grass at Bldg	N110409A	[redacted]		
↓	|	↓	N110409B			
			Test C			
EU6	828	Mud/Grass	EU6D5			
EU6		Asphalt	EUA7			
↓		Grass.	EU68			

GPS Gamma Survey Log

Site	NFSS 2013 Investigation	Meter	2221
		SN #	147508
Comments		Probe	44-10
		SN#	147451
Survey Date	11/5/13	Cal	10/28/13

Area ID	Boring ID	Location Description	File Name	Tech	Processed & checked	Notes
near MH6	MH6	Area around MH6	MH6601	[redacted]	✓	
EU6			EU6 69		✓	
MH6		Manhole 6	MH6 62		✓	ground is
			63		✓	Soggy
			64		✓	no data
			65		✓	no data
			67		✓	no data
			MH6 Rd		✓	
			N110510A		✓	

GPS Gamma Survey Log

Site	NFSS 2013 Investigation	Meter	2241
		SN #	147508
Comments		Probe	44-10
		SN#	149451
Survey Date	11/6/13	Cal	10/28/13

Area ID	Boring ID	Location Description	File Name	Tech	Processed & checked	Notes
EU6		Between fences	EU6 G10	[redacted]	✓	Grass
		↓	EU6 G11			
	GWS18		EU6 GW1			wet
		track to location	EU6 GW10			wet
	GW19		EU6 GW 19			wet
	GWS19	Hot spot	Biased			
			N110611A			No data
EU5	4G002		EU5 4G002A			trees
	1		EU5 4G002G			Ditch
	6A001		EU5 6A001			trees
		road to location	N110614A			don't Plot w/ data
			N110613B			Biased

GPS Gamma Survey Log

Site	NFSS 2013 Investigation	Meter	2241
		SN #	147508
Comments		Probe	44-10
		SN#	149457
Survey Date	11/7/13	Cal	10/28/13

Area ID	Boring ID	Location Description	File Name	Tech	Processed & checked	Notes
GW		Additional data	EU6GW1963	[redacted]		Grass very wet
EU6	GWS20-	EGW - 21-24	EU6GW 206			Grass
			EU6W20D			Dirt road
			EU6GWQ6			Grass
			EUGW 20 PTSD			Dirt/road
		MH6	MH6C4			Grass wet
			MH6C5			
			MH6C7			

GPS Gamma Survey Log

Site	NFSS 2013 Investigation	Meter	2221
		SN #	147508
Comments		Probe	44-10
	ACS	SN#	149451
Survey Date	11/8/2013	Cal	10/28/13

Area ID	Boring ID	Location Description	File Name	Tech	Processed & checked	Notes
EU11	2	Boring ID	2A006G	[redacted]	✓	
EU12		in file #	2A008A			
EU12			2A008G			
EU11			8A004			
EU11			8A004G2			
EU13			203G			
			~~20~~ 221A			
			221C			missing data
			221G			
			221GR			
EU1			EU1~~5~~A016G	[redacted]		Partial Survey needs Clearing

GPS Gamma Survey Log

Site	NFSS 2013 Investigation	Meter	2221
		SN #	147508
Comments		Probe	44-10
		SN#	149451
Survey Date	11/11/13	Cal	10/28/13

Area ID	Boring ID	Location Description	File Name	Tech	Processed & checked	Notes
EU7			8006	[redacted]		all locations
			B1EU7			very wet
			EU78D007			
			EU7Bios			
			EU7GWS6			
			EU7TB02A			
			EU7TB802			
			EU7QW6B			
			EU7TB802A			
			EU78004			
			EU78D009			
			EU78003			
			EU78D016			
			D11A			

GPS Gamma Survey Log

Site	NFSS 2013 Investigation	Meter	2221
		SN #	147508
Comments		Probe	44-10
		SN#	149451
Survey Date	11/12/13	Cal	10/28/13

Area ID	Boring ID	Location Description	File Name	Tech	Processed & checked	Notes
			EU76W57	[redacted]	✓	
			EU8A4			
			EU8South 5			
			EU87C			
			4A013C			
			EU76W567			
			EU78B003A			
			EU78D003CD			
			EU78E003C			
			N11214A			
			3017A			
			EU8A			
			EU8A3			
			EU8C2			
			EU8C3			
			EU8C5			
			EU83A17C	✓	✓	

GPS Gamma Survey Log

Site	NFSS 2013 Investigation	Meter	2221
		SN #	147508
Comments		Probe	44-10
		SN#	149451
Survey Date	11/13/13	Cal	10/28/13

Area ID	Boring ID	Location Description	File Name	Tech	Processed & checked	Notes
			203Sup	[redacted]		
			221C2			
			TBB106			
			221R			
EU13	GWS-14	GWSPt NofZ21	GWS221			

GPS Gamma Survey Log

Site	NFSS 2013 Investigation	Meter	2221
		SN #	147508
Comments		Probe	44-10
		SN#	149451
Survey Date	11/14/13	Cal	10/28/13

Area ID	Boring ID	Location Description	File Name	Tech	Processed & checked	Notes
			EU15A0106 2'			
			EU15A0166 2			
			EU15A021C			
			N111410A			
			N111416B			
See Spreadsheet			N111410C			
			N111410D			
			~~TWP3~~ TWP.937C			
			5A010C			
			218CE			
			220A			
			220C4			
			220CN			
			220CS			
			218			
			220C			
			N111314A			

GPS Gamma Survey Log

Site	NFSS 2013 Investigation	Meter	2221
		SN #	147508
Comments		Probe	44-10
		SN#	149451
Survey Date	11/15/13	Cal	10/28/13

Area ID	Boring ID	Location Description	File Name	Tech	Processed & checked	Notes
			8276	[redacted]	✓	
			82761	↓	↓	
See Spreadsheet			EU1503			
		209	EU1504			
			EU81114			
			EU81114C2			
			N111515A	↓	↓	
			N111510A	✓	✓	no data

GPS Gamma Survey Log

Site	NFSS 2013 Investigation	Meter	2221
		SN #	147508
Comments		Probe	44-10
		SN#	149451
Survey Date	11/18/13	Cal	10/28/13

Area ID	Boring ID	Location Description	File Name	Tech	Processed & checked	Notes
			EU10913	[redacted]	✓	
			EU10TS	↓	↓	
See	109		EU28F003			
			EU28F01A			
			EU28R001			
			EU2GWS23A			
			EU2GWS23G			
			EU8GWS1			

GPS Gamma Survey Log

Site	NFSS 2013 Investigation	Meter	2221
		SN #	147508
Comments		Probe	44-10
		SN#	149451
Survey Date	11/19/13	Cal	10/28/13

Area ID	Boring ID	Location Description	File Name	Tech	Processed & checked	Notes
			827A	[redacted]	✓	
			827SupG			
			830			
See Spreadsheet			830R			
		409	8B008			
			8F006G			
			EU24G			
			GWS5			
			N111914A			

GPS Gamma Survey Log

Site	NFSS 2013 Investigation	Meter	2221
		SN #	147508
Comments		Probe	44-10
		SN#	149451
Survey Date	11/20/13	Cal	10/28/13

Area ID	Boring ID	Location Description	File Name	Tech	Processed & checked	Notes
See Spreadsheet			314	[redacted]	✓	
			314G			
			4B004			
	L09		4B009			
			4C002			
			EU31120C			
			EU81120			
			GWS8			
			N112013A			
			N112014A			
			N112014B			
			N112015A			
			N112015B			
			N112015C			
			TB4113C			

GPS Gamma Survey Log

Site	NFSS 2013 Investigation	Meter	2221
		SN #	147508
Comments		Probe	44-10
		SN#	149451
Survey Date	11/21/2013	Cal	10/28/13

Area ID	Boring ID	Location Description	File Name	Tech	Processed & checked	Notes
		4A013	4A013Rain	[redacted]	✓	
		4B001	4B001			
		826	826			
See spreadsheet	109	830	830Sup			
			8A009			
			E2E03 Sup			
			GWS13			

GPS Gamma Survey Log

Site	NFSS 2013 Investigation	Meter	2221
		SN #	147508
Comments		Probe	44-10
		SN#	149451
Survey Date	11/22/13	Cal	10/28/13

Area ID	Boring ID	Location Description	File Name	Tech	Processed & checked	Notes
EU11	2A003		2A003	[redacted]	✓	
			2A003A			
			2A00H			
			SP16			
		830	SP17			

GPS Gamma Survey Log

Site	NFSS 2013 Investigation	Meter	2221
		SN #	147508
Comments		Probe	44-10
		SN#	149451
Survey Date	12/9/13	Cal	10/28/13

Area ID	Boring ID	Location Description	File Name	[redacted]	Processed & checked	Notes
			308-1		✓	
			3B013C			
			3B015			
			3C0011-1			
			3C0014A			
			3C0014C			
			3C0014C2			
See Spreadsheet			3C006C			
			3C0071C			
			3C0072C			
			3C008C			
			3D007C			
			EU28F006Sup			
			EU4 Chem			
			EU8 309-1			
			EU8 3C006C			
			EU8 3C007C			
			EU83C008~~C~~ MCS 8C			
			EU83D006A			
			EU83D006C			
			EU83D0086C			
			GS16C			
			GW15			

GPS Gamma Survey Log

Site	NFSS 2013 Investigation	Meter	2221
		SN #	147508
Comments		Probe	44-10
		SN#	149451
Survey Date	12/9/13	Cal	10/28/13

Area ID	Boring ID	Location Description	File Name	[redacted]	Processed & checked	Notes
			GWS15 INV	[redacted]	✓	
			GWS16A	↓	↓	
			N120910A			
			TB301G			

GPS Gamma Survey Log

Site	NFSS 2013 Investigation	Meter	2221
		SN #	147508
Comments		Probe	44-10
		SN#	149451
Survey Date	12/10/13	Cal	10/28/13

Area ID	Boring ID	Location Description	File Name	Tech	Processed & checked	Notes
			205	[redacted]	✓	
			205A			
			205C			
			219			
			2B002-1			
			2B002-2			
			2B014C			
			2D12A			
			2D12C			
			2D13A			
			2B13C			
			3B003			
			3B004			
			3B011-1A			
			3B011-1C			
			3B011-2			
			3D001			
			3D004			
			3D004D			
			812			
			8B01A			
			8B01C			
			QWS15-2C			

See Spreadsheet

GPS Gamma Survey Log

Site	NFSS 2013 Investigation	Meter	2221
		SN #	147508
Comments		Probe	44-10
		SN#	149451
Survey Date	12/11/13	Cal	10/28/13

Area ID	Boring ID	Location Description	File Name	Tech	Processed & checked	Notes
			GWS 10C	[redacted]	✓	
			GWS10G			
			GWS17C			
See spreadsheet			GWS170T			
		LO9	PEx 1			
			Sup Fen			
			GWS176			

GPS Gamma Survey Log

Site	NFSS 2013 Investigation	Meter	2221
		SN #	147508
Comments		Probe	44-10
		SN#	149451
Survey Date	12/12/13	Cal	10/28/13

Area ID	Boring ID	Location Description	File Name	[redacted]	Processed & checked	Notes
			BCK4C-2		✓	
	See spreadsheet	209	BJDC4C-4			
			BK-4A-1			
			BKCAC-3			
			PEXS			

Appendix E-6-1

Soil Sample Radiation Data Table

Soil Sample Radiation Survey Data Table

			0 ft	0-.5 ft (cpm)				0.5-2.0ft (cpm)				2.0-3.0 ft (cpm)				3.0-4.0 ft (cpm)				4.0-5.0 ft (cpm)				3.0-5.0 ft (cpm)				5.0-7.0 ft (cpm)				Background cpm				
			44-10	44-9	43-93			44-9	43-93			44-9	43-93			44-9	43-93			44-9	43-93			44-9	43-93			44-9	43-93			44-10	44-9	43-93		
EU	NEW Boring	Date	cpm	cpm	α	β+α	β	cpm	α	β+α	β	cpm	α	β+α	β	cpm	α	β+α	β	cpm	α	β+α	β	cpm	α	β+α	β	cpm	α	β+α	β	cpm	cpm	α	β+α	β
1	503-1	11/20/13	8858	84	2	382	380	100	2	510	508	52	2	288	286																	6718	36	2	178	176
1	503-2	11/20/13	8800	54	0	282	282	52	2	316	314	62	0	330	330																	6718	36	2	178	176
1	503-3	11/20/13	8858	70	0	310	310	62	2	304	302	58	0	330	330																	6718	36	2	178	176
1	503-4	11/20/13	7484	48	0	316	316	54	0	300	300	70	0	268	268																	6718	36	2	178	176
1	504-1	11/19/13	10286	58	0	174	174	56	0	180	180	46	0	172	172																	7628	30	0	132	132
1	504-2	11/19/13	10486	48	0	204	204	54	0	208	208	42	0	180	180																	7628	30	0	132	132
1	504-3	11/19/13	9492	56	0	180	180	48	0	174	174	40	0	158	158																	7628	30	0	132	132
1	504-4	11/19/13	9294	48	2	184	182	62	2	234	232	52	0	188	188																	7628	30	0	132	132
1	5A010-1	11/20/13	14018	54	0	326	326	68	0	340	340	52	0	316	316																	6718	36	2	178	176
1	5A010-2	11/20/13	17106	56	2	308	306	68	0	342	342	56	0	322	322																	6718	36	2	178	176
1	5A010-3	11/20/13	9226	58	0	338	338	58	0	340	340	42	0	320	320																	6718	36	2	178	176
1	5A010-4	6/24/14	12824	64	4	230	226	62	2	222	220	58	2	222	220	54	0	136	136													8268	30	4	122	118
1	5A010-5	6/24/14	12638	56	2	170	168	80	8	196	188	68	2	186	184	56	4	196	192													8268	30	4	122	118
1	5A016-1	11/19/13	6404	52	0	190	190	50	0	202	202	62	0	236	236																	7628	30	0	132	132
1	5A016-2	11/19/13	12546	40	2	204	202	48	0	218	218	40	0	202	202																	7628	30	0	132	132
1	5A016-3	11/19/13	8010	56	0	238	238	54	0	236	236	66	0	240	240																	7628	30	0	132	132
1	5A016-4	11/19/13	8028	46	0	206	206	52	0	204	204	44	0	188	188																	7628	30	0	132	132
1	5A016-5	6/23/14	8842	44	8	238	230	56	6	208	202	84	6	164	158	52	0	178	178													7746	38	2	118	116
1	5A016-6	6/24/14	8986	78	6	188	182	58	4	174	170	54	0	172	172	54	2	184	182													8268	30	4	122	118
1	5A016-7	6/23/14	11046	40	2	174	172	44	4	198	194	56	6	226	220	50	0	182	182													7746	38	2	118	116
1	5A016-8	6/23/14	8850	56	0	188	188	70	2	222	220	66	2	204	202	64	0	210	210													7746	38	2	118	116
1	5A016-9	6/24/14	8496	60	2	166	164	66	0	238	238	40	4	192	188	54	2	176	174													8268	30	4	122	118
1	5A021-1	11/20/13	11486	64	2	356	354	52	2	282	280	68	0	372	372																	6718	36	2	178	176
1	5A021-2	11/20/13	9564	44	0	260	260	50	0	320	320	52	2	300	298																	6718	36	2	178	176
1	5A021-3	11/20/13	12684	38	0	302	302	40	2	320	318	68	0	400	400																	6718	36	2	178	176
1	5A021-4	11/20/13	10938	42	2	248	246	48	0	312	312	56	2	346	344																	6718	36	2	178	176
1	5A021-5	6/24/14	9752	46	2	166	164	50	0	230	230	78	4	200	196	54	0	202	202													8268	30	4	122	118
1	SP13	11/20/13	11292	138	0	540	540	150	0	652	652	50	0	292	292																	6718	36	2	178	176
2	404-1	11/25/13	9844	68	2	278	276	66	0	278	278	76	2	308	306																	5260	50	0	162	162
2	404-2	11/25/13	10678	58	0	258	258	50	0	238	238	62	0	276	276																	5260	50	0	162	162
2	404-3	11/25/13	10740	72	2	240	238	70	4	298	294	74	2	274	272																	5260	50	0	162	162
2	4A003-1	11/26/13	9824	44	0	240	240	48	0	340	340	50	4	314	310																	5998	26	0	130	130
2	4A003-2	11/26/13	9750	52	4	318	314	64	2	314	312	68	0	304	304																	5998	26	0	130	130
2	4A003-3	6/26/14	9404	76	4	208	204	54	2	190	188	64	0	210	210	52	0	190	190													6406	36	2	118	116
2	4A007-1	11/25/13	8102	40	0	224	224	54	2	316	314	50	0	254	254																	8758	40	0	200	200
2	4A007-2	11/25/13	10508	48	0	284	284	62	4	400	396	36	2	284	282																	8758	40	0	200	200
2	4A013-1	12/2/13	19106	74	2	408	406	86	2	462	460	40	0	300	300																	10464	40	2	232	230
2	4A013-2	12/2/13	10424	58	0	370	370	54	0	348	348	66	0	380	380																	10464	40	2	232	230
2	4A013-3	12/2/13	12032	76	0	510	510	54	0	304	304	64	2	380	378																	10464	40	2	232	230
2	4A013-4	12/2/13	10870	66	2	372	370	50	0	338	338	64	2	354	352																	10464	40	2	232	230
2	4A013-5	6/27/14	11000	64	10	256	246	60	2	192	190	54	4	228	224																	10692	36	8	176	168
2	4A013-6	6/27/14	11698	82	0	258	258	48	0	154	154	46	2	214	212																	10692	36	8	176	168

Soil Sample Radiation Survey Data Table

			0 ft	0-.5 ft (cpm)				0.5-2.0ft (cpm)				2.0-3.0 ft (cpm)				3.0-4.0 ft (cpm)				4.0-5.0 ft (cpm)				3.0-5.0 ft (cpm)				5.0-7.0 ft (cpm)				Background cpm				
			44-10	44-9	43-93			44-9	43-93			44-9	43-93			44-9	43-93			44-9	43-93			44-9	43-93			44-9	43-93			44-10	44-9	43-93		
EU	NEW Boring	Date	cpm	cpm	α	β+α	β	cpm	α	β+α	β	cpm	α	β+α	β	cpm	α	β+α	β	cpm	α	β+α	β	cpm	α	β+α	β	cpm	α	β+α	β	cpm	cpm	α	β+α	β
2	4A013-7	Not Sampled																																		
2	4A014-1	11/26/13	10420	26	0	258	258	68	4	244	240	0	0	0	0																	5998	26	0	130	130
2	4B001-1	11/26/13	10216	40	2	202	200	44	0	220	220	30	2	230	228																	5998	26	0	130	130
2	8F001-1	11/22/13	8520	58	2	258	256	56	2	234	232	60	2	248	246																	7118	50	0	134	134
2	8F001-2	11/22/13	9034	42	0	278	278	52	2	302	300	44	2	242	240																	7118	50	0	134	134
2	8F001-3	11/22/13	8082	74	0	252	252	60	0	270	270	50	0	260	260																	7118	50	0	134	134
2	8F003-1	11/19/13	5434	50	2	188	186	46	0	174	174	48	0	202	202																	5482	48	2	94	92
2	8F003-2	11/19/13	7150	42	0	140	140	44	0	156	156	66	0	236	236																	5484	48	2	94	92
2	8F003-3	11/19/13	7554	46	0	178	178	46	0	180	180	56	2	200	198																	5484	48	2	94	92
2	8F003-4	11/19/13	6966	32	0	142	142	52	0	248	248	54	0	212	212																	5484	48	2	94	92
2	8F003-5	6/24/14	8422	46	2	154	152	48	2	144	142	46	2	190	188	68	0	186	186													7170	50	0	130	130
2	8F003-6	6/24/14	7974	38	4	180	176	50	0	152	152	54	2	194	192	68	2	190	188													7170	50	0	130	130
2	8F003-7	6/24/14	7588	48	0	174	174	70	0	154	154	42	2	186	184	70	2	166	164													7170	50	0	130	130
2	8F003-8	6/24/14	7506	38	8	154	146	46	0	186	186	52	4	174	170	64	2	168	166													7170	50	0	130	130
2	8F005-1	Not Sampled in Ditch																																		
2	8F005-2	Not Sampled in Ditch																																		
2	8F005-3	Not Sampled in Ditch																																		
2	8F006-1	11/25/13	12418	58	0	278	278	44	2	332	330	60	2	316	314																	8758	40	0	200	200
2	8F006-2	11/25/13	12816	40	0	202	202	48	0	330	330	66	0	344	344																	8758	40	0	200	200
2	8F006-3	11/25/13	10340	58	2	294	292	48	0	302	302	62	0	300	300																	8758	40	0	200	200
2	8F006-4	11/25/13	10198	48	2	342	340	62	2	308	306	58	0	302	302																	8758	40	0	200	200
2	8F006-5	12/9/13	12808	64	2	294	292	72	2	334	332	56	0	242	242																	8560	40	2	206	204
2	8F006-6	12/9/13	13072	76	2	278	276	82	0	260	260	54	0	296	296																	8560	40	2	206	204
2	GWS-1	Not Sampled Rock																																		
2	GWS-2	11/25/13	11854	62	0	332	332	66	6	378	372	66	2	344	342																	10526	46	0	226	226
2	GWS-3	11/25/13	13222	52	0	286	286	50	0	352	352	54	2	334	332																	10526	46	0	226	226
2	SP-14-1	6/27/14	9576	70	2	182	180	60	0	196	196	60	0	172	172	52	0	166	166													10692	36	8	176	168
2	SP16	11/25/13	21948	52	0	240	240	132	2	434	432	36	2	296	294																	8758	40	0	200	200
3	4B009-1	11/27/13	44986	66	0	346	346	62	0	336	336	56	0	312	312																	8874	44	0	208	208
3	4B009-2	11/27/13	9392	60	0	326	326	68	0	308	308	68	0	300	300																	8874	44	0	208	208
3	4B009-3	11/27/13	9838	60	0	300	300	66	4	322	318	56	2	340	338																	8874	44	0	208	208
3	4B009-4	12/2/13	10410	52	2	294	292	64	2	356	354	58	0	352	352																	10464	40	2	232	230
3	4B010-1	11/27/13	14732	64	4	418	414	62	0	336	336	62	0	326	326																	8874	44	0	208	208
3	4B010-2	11/27/13	10056	64	2	372	370	56	0	276	276	70	0	306	306																	8874	44	0	208	208
3	4B010-3	11/27/13	9696	36	0	276	276	62	0	334	334	64	2	356	354																	8874	44	0	208	208
3	4B010-4	6/30/14	9160	50	0	216	216	62	0	218	218	48	0	194	194	34	2	162	160													8808	56	0	146	146
3	4B014-1	11/26/13	10452	40	0	256	256	50	0	244	244	50	0	254	254																	5998	26	0	130	130
3	4B014-2	11/26/13	6976	46	4	196	192	34	0	178	178	32	0	180	180																	5998	26	0	130	130
3	4B014-3	11/27/13	6492	34	2	276	274	48	0	300	300	74	0	336	336																	8874	44	0	208	208
3	4B014-4	11/26/13	11022	64	0	254	254	74	0	290	290	54	2	254	252																	5998	26	0	130	130
3	4B014-5	6/27/14	9716	68	0	218	218	36	2	168	166	52	0	138	138	58	0	186	186													10692	36	8	176	168
3	4B014-6	6/27/14	19106	66	0	222	222	54	0	216	216	64	0	158	158	52	0	178	178													10692	36	8	176	168

Soil Sample Radiation Survey Data Table

			0 ft	0-.5 ft (cpm)				0.5-2.0ft (cpm)				2.0-3.0 ft (cpm)				3.0-4.0 ft (cpm)				4.0-5.0 ft (cpm)				3.0-5.0 ft (cpm)				5.0-7.0 ft (cpm)				Background cpm				
			44-10	44-9	43-93			44-9	43-93			44-9	43-93			44-9	43-93			44-9	43-93			44-9	43-93			44-9	43-93			44-10	44-9	43-93		
EU	NEW Boring	Date	cpm	cpm	α	β+α	β	cpm	α	β+α	β	cpm	α	β+α	β	cpm	α	β+α	β	cpm	α	β+α	β	cpm	α	β+α	β	cpm	α	β+α	β	cpm	cpm	α	β+α	β
3	4B014-7	6/27/14	10460	62	0	202	202	70	0	202	202	44	0	186	186																	10692	36	8	176	168
3	4B014-8	6/30/14	7252	48	0	158	158	64	2	204	202	54	0	208	208	40	2	144	142													8808	56	0	146	146
3	4B017-1	11/26/13	10516	60	4	276	272	42	0	276	276	46	4	272	268																	5998	26	0	130	130
3	4B017-2	11/26/13	10646	40	0	288	288	50	0	308	308	32	0	242	242																	5998	26	0	130	130
3	4B017-3	11/26/13	6382	58	2	232	230	26	0	182	182	36	0	194	194																	5998	26	0	130	130
3	4B021-1	11/27/13	10804	62	0	320	320	66	0	344	344	60	0	314	314																	8876	44	0	208	208
3	4B021-2	11/27/13	8714	58	4	308	304	62	0	336	336	54	0	336	336																	8874	44	0	208	208
3	4B021-3	11/27/13	10352	60	0	328	328	52	0	316	316	52	0	322	322																	8874	44	0	208	208
3	4B021-4	11/27/13	9570	60	0	326	326	72	0	362	362	66	2	342	340																	8874	44	0	208	208
3	GWS-09-1	6/30/14	9492	74	4	192	188	74	0	212	212	66	0	196	196	64	0	184	184													8808	56	0	146	146
3	GWS-09-2	6/30/14	19686	50	0	210	210	72	4	308	304	66	0	208	208	36	0	152	152													8808	56	0	146	146
3	GWS-09-3	6/30/14	10232	60	0	204	204	48	2	190	188	80	0	186	186	62	0	248	248													8808	56	0	146	146
3	GWS-8	11/26/13	13114	34	4	254	250	72	0	264	264	50	2	230	228																	5998	26	0	130	130
3	GWS-9	11/27/13	30358	62	2	342	340	162	0	874	874	62	0	338	338																	8874	44	0	208	208
3	SP14	11/26/13	21690	44	4	316	312	62	4	302	298	52	0	282	282																	5998	26	0	130	130
3	SP15	11/27/13	43420	70	0	340	340	62	0	340	340	66	2	352	350																	8874	44	0	208	208
3	TB411_03-1	12/2/13	9802	64	2	360	358	42	2	296	294	54	2	318	316																	10464	40	2	232	230
3	TB411_03-2	12/2/13	11052	42	0	280	280	50	0	312	312	64	2	344	342																	10464	40	2	232	230
3	TB411_03-3	12/2/13	11052	58	0	342	342	48	0	326	326	48	0	324	324																	10464	40	2	232	230
3	TB411_03-4	12/2/13	10236	42	0	276	276	68	0	374	374	72	0	418	418																	10464	40	2	232	230
4	4C002-1	12/9/13	13572	56	2	284	282	48	0	264	264	56	2	290	288																	8560	40	2	206	204
4	4C002-2	12/9/13	10914	66	2	252	250	70	2	298	296	48	2	288	286																	8560	40	2	206	204
4	4C002-3	12/9/13	15116	56	0	272	272	72	0	306	306	48	2	306	304																	8560	40	2	206	204
4	4C002-4	12/9/13	10470	54	4	276	272	78	0	338	338	56	0	274	274																	8560	40	2	206	204
4	GWS-16	Not Sampled Asphalt																																		
4	GWS-17	Not Sampled Concrete																																		
4	GWS-25	Not Sampled																																		
4	TB408_02-1	12/9/13	4462	54	0	218	218	66	4	276	272	58	2	230	228																	8560	40	2	206	204
5	4G002-1	11/8/13	8450	56	0	146	146	56	2	182	180	72	0	140	140																	8624	38	4	160	156
5	4G002-2	11/8/13	7060	52	2	164	162	38	2	270	268	60	0	284	284																	8624	38	0	182	182
5	4G002-3	11/8/13	7144	20	0	160	160	58	2	182	180	30	0	210	210																	8624	38	0	182	182
5	4G002-4	11/8/13	7766	58	2	206	204	58	2	176	174	46	2	150	148																	8624	38	4	160	156
5	6A001-1	11/7/13	52406	136	10	922	912	60	8	654	646	68	2	240	238																	7288	34	0	172	172
5	6A001-2	11/7/13	8646	54	2	268	266	68	4	292	288	66	0	308	308																	7288	34	0	172	172
5	6A001-3	11/7/13	7166	60	8	246	238	62	2	282	280	68	2	332	330																	7288	34	0	172	172
5	6A001-4	11/7/13	8800	60	2	270	268	48	2	292	290	28	0	324	324																	7288	34	0	172	172
5	6A001-5	6/30/14	8136	54	2	192	190	50	0	170	170	70	2	186	184	46	0	206	206													8808	56	0	146	146
5	6A001-6	6/30/14	9104	70	4	238	234	72	6	180	174	44	0	186	186	46	2	184	182													8808	56	0	146	146
6	606-1	11/6/13	9668	58	2	278	276	58	6	278	272	60	6	280	274																	9522	50	6	176	170
6	606-2	11/6/13	8570	76	2	238	236	56	10	300	290	66	2	264	262																	9522	50	6	176	170
6	606-3	11/5/13	9942	66	2	188	186	82	0	200	200	78	4	150	146																	7688	68	4	124	120
6	606-4	11/6/13	9130	80	6	316	310	80	0	276	276	66	2	258	256																	9522	50	6	176	170

			0 ft	0-.5 ft (cpm)				0.5-2.0ft (cpm)				2.0-3.0 ft (cpm)				3.0-4.0 ft (cpm)				4.0-5.0 ft (cpm)				3.0-5.0 ft (cpm)				5.0-7.0 ft (cpm)				Background cpm				
			44-10	44-9	43-93			44-9	43-93			44-9	43-93			44-9	43-93			44-9	43-93			44-9	43-93			44-9	43-93			44-10	44-9	43-93		
EU	NEW Boring	Date	cpm	cpm	α	β+α	β	cpm	α	β+α	β	cpm	α	β+α	β	cpm	α	β+α	β	cpm	α	β+α	β	cpm	α	β+α	β	cpm	α	β+α	β	cpm	cpm	α	β+α	β
6	6B005-1	11/6/13	14270	80	12	446	434	132	12	1446	1434	68	12	370	358																	9522	50	6	176	170
6	6B005-2	11/6/13	15870	50	18	390	372	58	2	374	372	52	4	304	300																	9522	50	6	176	170
6	6B005-3	11/6/13	15794	66	4	400	396	62	4	394	390	50	4	332	328																	9522	50	6	176	170
6	6B005-4	11/6/13	8042	50	10	300	290	54	0	334	334	66	10	322	312																	9522	50	6	176	170
6	6B005-5	7/1/14	9298	48	8	226	218	74	2	182	180	80	2	164	162	42	4	208	204													7248	50	2	190	188
6	6B005-6	7/1/14	9448	40	2	186	184	68	0	200	200	74	0	196	196	72	0	168	168													7248	50	2	190	188
6	6B005-7	7/1/14	12134	64	4	216	212	66	0	204	204	62	0	174	174	60	0	152	152													7248	50	2	190	188
6	828-1	11/6/13	8114	50	2	208	206	58	4	224	220	62	0	224	224																	9522	50	2	128	126
6	828-2	11/5/13	8064	58	2	146	144	48	2	164	162	38	0	198	198																	7688	68	4	124	120
6	828-3	11/5/13	7928	32	2	196	194	54	2	164	162	48	0	164	164																	7688	68	4	124	120
6	828-4	11/5/13	8610	52	6	172	166	76	4	190	186	58	2	164	162																	7688	68	4	124	120
6	828-5	7/2/14	9810	82	6	230	224	46	0	170	170	68	0	158	158	50	0	158	158													6582	40	0	160	160
6	829-1	11/6/13	12734	60	2	252	250	48	2	234	232	50	6	240	234																	9522	50	6	176	170
6	829-2	11/6/13	9748	58	2	240	238	78	6	230	224	56	0	264	264																	9522	50	6	176	170
6	829-3	11/5/13	9942	46	2	200	198	60	4	162	158	40	8	166	158																	7688	68	4	124	120
6	829-4	11/6/13	8840	72	0	248	248	84	2	274	272	90	2	352	350																	9522	50	6	176	170
6	EU061-1	11/6/13	6194	68	0	354	354	66	4	286	282	70	8	338	330																	9522	50	6	176	170
6	EU061-2	11/6/13	8152	54	6	312	306	48	4	318	314	54	0	340	340																	9522	50	6	176	170
6	EU061-3	11/6/13	8690	50	0	284	284	58	4	298	294	70	2	308	306																	9522	50	6	176	170
6	EU061-4	11/6/13	8514	90	0	296	296	68	4	326	322	50	2	312	310																	9522	50	6	176	170
6	GWS-18	11/7/13	12056	58	0	296	296	52	2	384	382	50	0	372	372																	7288	34	0	172	172
6	GWS-18-1	6/30/14	9392	70	2	226	224	42	0	202	202	62	0	208	208	74	0	206	206													8808	56	0	146	146
6	GWS-18-2	6/30/14	8700	64	2	194	192	64	2	226	224	70	0	174	174	54	2	194	192													8808	56	0	146	146
6	GWS-18-3	6/30/14	9288	42	0	202	202	52	0	206	206	62	0	192	192	74	2	206	204													8808	56	0	146	146
6	GWS-18-4	6/30/14	9838	42	0	228	228	50	0	204	204	68	2	214	212	76	0	208	208													10698	38	0	164	164
6	GWS-19	11/7/13	31468	84	14	418	404	176	66	764	698	128	46	860	814	80	22	488	466	70	8	380	372									7288	34	0	172	172
6	GWS-19-1	7/1/14	9760	64	6	246	240	88	0	212	212	62	0	188	188	60	0	186	186													7248	50	2	190	188
6	GWS-19-2	7/1/14	10994	74	4	250	246	68	0	234	234	70	2	248	246	54	0	174	174													7248	50	2	190	188
6	GWS-19-3	7/1/14	9070	80	0	226	226	58	2	236	234	68	2	224	222	60	0	200	200													7248	50	2	190	188
6	GWS-19-4	7/1/14	9430	68	2	260	258	70	2	226	224	54	2	206	204	60	2	228	226													7248	50	2	190	188
6	GWS-20	11/6/13	9358	60	2	338	336	64	6	322	316	48	2	236	234																	9522	50	6	176	170
6	GWS-21	11/7/13	13496	56	0	340	340	38	0	340	340	54	0	298	298																	7288	34	0	172	172
6	GWS-22	11/7/13	14512	56	0	288	288	66	2	250	248	56	2	280	278																	7288	34	0	172	172
6	GWS-23	11/7/13	11976	64	0	366	366	52	0	344	344	58	0	324	324																	7288	34	0	172	172
6	GWS-24	11/7/13	13580	82	0	294	294	76	4	256	252	60	0	242	242																	7288	34	0	172	172
6	SP1	11/8/13	60322	126	4	1230	1226	226	6	1098	1092	94	6	410	404	62	2	284	282													8624	38	0	182	182
7	8D003-1	11/15/13	9788	34	2	226	224	60	2	264	262	56	0	300	300																	7876	34	0	176	176
7	8D003-2	11/15/13	11330	40	0	266	266	52	4	268	264	46	0	290	290																	7876	34	0	176	176
7	8D003-3	11/15/13	9854	60	0	270	270	38	0	286	286	36	2	278	276																	7876	34	0	176	176
7	8D003-4	11/15/13	11210	58	4	262	258	74	0	314	314	74	4	308	304																	7876	34	0	176	176
7	8D004-1	11/18/13	11514	56	0	172	172	66	0	170	170	52	0	202	202																	7620	52	0	120	120
7	8D004-2	11/18/13	8560	66	2	200	198	58	0	226	226	42	0	158	158																	7620	52	0	120	120

			0 ft	0-.5 ft (cpm)				0.5-2.0ft (cpm)				2.0-3.0 ft (cpm)				3.0-4.0 ft (cpm)				4.0-5.0 ft (cpm)				3.0-5.0 ft (cpm)				5.0-7.0 ft (cpm)				Background cpm				
			44-10	44-9	43-93			44-9	43-93			44-9	43-93			44-9	43-93			44-9	43-93			44-9	43-93			44-9	43-93			44-10	44-9	43-93		
EU	NEW Boring	Date	cpm	cpm	α	β+α	β	cpm	α	β+α	β	cpm	α	β+α	β	cpm	α	β+α	β	cpm	α	β+α	β	cpm	α	β+α	β	cpm	α	β+α	β	cpm	cpm	α	β+α	β
7	8D004-3	11/18/13	9548	68	2	198	196	72	0	216	216	56	0	244	244																	7620	52	0	120	120
7	8D004-4	11/18/13	9870	60	0	174	174	56	0	170	170	56	0	176	176																	7620	52	0	120	120
7	8D004-5	6/25/14	9682	60	12	200	188	66	0	208	208	58	0	230	230	52	0	182	182													6748	20	0	130	130
7	8D004-6	6/25/14	10802	62	2	184	182	52	0	178	178	54	2	224	222	62	2	182	180													6748	20	0	130	130
7	8D004-7	6/25/14	9848	72	0	192	192	56	4	190	186	74	0	214	214	34	0	180	180													6748	20	0	130	130
7	8D006-1	11/18/13	12610	58	2	164	162	50	2	208	206	30	0	216	216																	6540	52	2	124	122
7	8D006-2	11/15/13	10692	30	0	262	262	72	0	300	300	52	2	340	338																	7876	34	0	176	176
7	8D006-3	11/15/13	9008	50	2	224	222	74	0	294	294	56	2	338	336																	7876	34	0	176	176
7	8D006-4	11/15/13	10396	52	2	274	272	34	2	300	298	76	2	312	310																	7876	34	0	176	176
7	8D006-5	6/24/14	11598	76	2	232	230	54	2	210	208	52	4	252	248	54	0	208	208													7170	50	0	130	130
7	8D006-6	6/24/14	8622	52	0	174	174	56	0	172	172	56	0	174	174	52	2	200	198													7170	50	0	130	130
7	8D006-7	6/24/14	9670	64	0	178	178	54	0	170	170	72	0	184	184	68	0	172	172													7170	50	0	130	130
7	8D007-1	11/18/13	8510	46	0	204	204	48	2	218	216	48	4	188	184																	7620	52	0	120	120
7	8D007-2	11/18/13	9492	68	2	178	176	60	6	196	190	72	0	178	178																	7620	52	0	120	120
7	8D007-3	11/18/13	17052	60	4	196	192	56	0	200	200	60	4	192	188																	7620	52	0	120	120
7	8D007-4	11/18/13	9848	48	0	212	212	82	0	220	220	50	4	176	172																	7620	52	0	120	120
7	8D007-5	6/25/14	12042	66	0	252	252	74	2	176	174	56	0	196	196	52	2	176	174													6748	20	0	130	130
7	8D009-1	11/14/13	9000	54	2	152	150	62	0	170	170	66	4	206	202																	5944	28	2	106	104
7	8D009-2	11/14/13	16296	44	0	180	180	80	2	242	240	70	2	210	208																	5944	28	2	106	104
7	8D009-3	11/14/13	9110	70	0	180	180	80	2	238	236	96	2	260	258																	5944	28	2	106	104
7	8D009-3	11/14/13	9778	46	4	208	204	72	0	260	260	84	0	264	264	106	0	436	436	56	0	238	238									5944	28	2	106	104
7	8D009-4	11/14/13	10576	72	2	170	168	28	0	146	146	54	2	206	204																	5944	28	2	106	104
7	8D009-5	6/25/14	10302	52	0	212	212	66	0	192	192	90	4	328	324									114	2	386	384	50	2	202	200	6748	20	0	130	130
7	8D009-6	6/25/14	9702	46	0	204	204	54	0	250	250	64	4	204	200									114	8	312	304	54	2	278	276	6748	20	0	130	130
7	8D009-7	6/25/14	9310	52	0	216	216	62	0	246	246	92	0	222	222									46	2	182	180	46	0	162	162	6748	20	0	130	130
7	8D016-1	11/15/13	8458	70	0	308	308	64	0	316	316	58	0	286	286																	7876	34	0	176	176
7	8D016-2	11/15/13	11980	34	0	308	308	50	0	304	304	86	4	456	452	60	2	272	270	0	0	0	0									7876	34	0	176	176
7	8D016-3	11/15/13	10350	60	0	270	270	54	0	326	326	100	2	586	584	138	8	870	862	90	0	288	288									7876	34	0	176	176
7	8D016-4	11/15/13	14846	46	0	310	310	86	0	374	374	112	2	516	514	82	4	464	460	64	2	406	404									7876	34	0	176	176
7	8D016-5	6/26/14	9042	64	2	194	192	88	0	224	224	72	0	202	202									54	0	162	162	56	4	216	212	6406	36	2	118	116
7	8D016-6	6/26/14	9150	52	0	202	202	58	0	220	220	90	0	216	216									58	0	160	160	84	4	208	204	6406	36	2	118	116
7	8D016-7	6/26/14	11190	58	0	216	216	68	2	250	248	154	4	564	560									122	4	444	440	74	2	232	230	6406	36	2	118	116
7	8D016-8	7/2/14	10012	82	2	234	232	48	2	244	242	68	4	156	152									50	0	204	204	70	2	170	168	8658	40	0	160	160
7	8D016-9	7/2/14	10082	78	0	236	236	40	2	202	200	106	4	186	182									48	0	192	192	54	2	230	228	8658	40	0	160	160
7	8E003-1	11/19/13	8530	38	0	178	178	54	2	192	190	54	2	236	234																	8632	40	0	110	110
7	8E003-2	11/19/13	10640	48	0	220	220	60	2	194	192	66	2	158	156																	8632	40	0	110	110
7	8E003-3	11/19/13	8466	58	0	196	196	72	0	184	184	58	0	196	196																	8632	40	0	110	110
7	8E003-4	11/18/13	9206	60	2	218	216	66	0	192	192	40	2	204	202																	7620	52	0	120	120
7	GWS-06-1	6/25/14	9024	50	4	188	184	62	0	200	200	66	4	210	206	48	2	208	206													6748	20	0	130	130
7	GWS-06-2	6/25/14	11476	56	2	170	168	48	0	168	168	54	0	192	192	68	0	190	190													6748	20	0	130	130
7	GWS-06-3	6/25/14	9340	66	2	228	226	68	0	206	206	58	2	192	190	54	0	194	194													6748	20	0	130	130
7	GWS-4	11/19/13	10394	62	0	202	202	50	2	206	204	64	0	218	218																	8632	40	0	110	110

			0 ft	0-.5 ft (cpm)				0.5-2.0ft (cpm)				2.0-3.0 ft (cpm)				3.0-4.0 ft (cpm)				4.0-5.0 ft (cpm)				3.0-5.0 ft (cpm)				5.0-7.0 ft (cpm)				Background cpm				
			44-10	44-9	43-93			44-9	43-93			44-9	43-93			44-9	43-93			44-9	43-93			44-9	43-93			44-9	43-93			44-10	44-9	43-93		
EU	NEW Boring	Date	cpm	cpm	α	β+α	β	cpm	α	β+α	β	cpm	α	β+α	β	cpm	α	β+α	β	cpm	α	β+α	β	cpm	α	β+α	β	cpm	α	β+α	β	cpm	cpm	α	β+α	β
7	GWS-6	11/14/13	17970	96	6	382	376	64	0	210	210	46	0	174	174																	5944	28	2	106	104
7	GWS-7	11/14/13	9110	52	2	176	174	30	0	164	164	58	0	170	170																	4152	18	0	96	96
7	TB802_01-5	6/26/14	12760	52	0	208	208	82	2	324	322	104	2	526	524									102	4	456	452	68	2	294	292	6406	36	2	118	116
7	TB802_01-6	6/26/14	11764	68	2	224	222	122	8	878	870	140	4	604	600									136	2	402	400	76	2	210	208	6406	36	2	118	116
7	TB802-01	11/14/13	8686	42	0	224	224	62	2	228	226	78	6	328	322	72	4	352	348	82	2	198	196									5944	28	2	106	104
7	TB802-02	11/14/13	9056	72	4	186	182	58	4	264	260	50	2	188	186																	5944	28	2	106	104
7	TB802-03	11/14/13	9342	50	2	172	170	52	0	188	188	58	0	194	194																	5944	28	2	106	104
7	TB802-04	11/14/13	8360	66	0	166	166	64	0	180	180	56	0	182	182																	5944	28	2	106	104
7	TB802A_01-1	11/14/13	8246	60	2	246	244	64	0	246	246	48	2	260	258																	5944	28	2	106	104
7	TB802A_01-2	11/14/13	9388	40	2	200	198	42	0	176	176	58	2	186	184																	5944	28	2	106	104
7	TB802A_01-3	11/14/13	10228	52	4	228	224	48	0	212	212	92	6	282	276	44	2	214	212	0	0	0	0									5944	28	2	106	104
7	TB802A_01-4	11/14/13	9346	42	2	170	168	66	4	206	202	66	0	200	200																	5944	28	2	106	104
8	308-1	12/10/13	9706	56	0	222	222	56	0	246	246	60	0	248	248																	5086	36	2	156	154
8	308-2	12/10/13	8272	62	0	218	218	32	0	262	262	42	0	274	274																	5086	36	2	156	154
8	309-1	12/10/13	10330	46	0	220	220	62	0	204	204	52	2	244	242																	5086	36	2	156	154
8	312-1	12/2/13	9260	40	0	296	296	76	0	330	330	64	0	276	276																	6114	38	0	182	182
8	312-2	12/2/13	11596	70	2	264	262	44	0	256	256	54	0	290	290																	6114	38	0	182	182
8	312-3	12/2/13	10778	46	0	226	226	56	0	262	262	42	2	240	238																	6114	38	0	182	182
8	312-4	6/20/14	11264	64	0	328	328	48	2	308	306	50	0	252	252	80	6	300	294													7972	34	0	204	204
8	312-5	6/20/14	13166	84	0	268	268	62	4	246	242	66	0	274	274	46	2	238	236													7972	34	0	204	204
8	314-1	12/9/13	7668	66	2	276	274	44	2	326	324	78	6	280	274																	8560	40	2	206	204
8	314-2	12/9/13	6724	56	4	262	258	42	2	236	234	72	6	256	250																	8560	40	2	206	204
8	314-3	12/9/13	9472	56	2	312	310	54	0	300	300	68	2	246	244																	8560	40	2	206	204
8	314-4	12/9/13	6410	52	4	272	268	74	0	274	274	74	0	328	328																	8560	40	2	206	204
8	3A002-1	11/22/13	4818	30	0	244	244	38	0	194	194	42	2	270	268																	5580	46	0	156	156
8	3A002-2	11/22/13	11002	32	0	286	286	50	0	248	248	38	2	242	240																	5580	46	0	156	156
8	3A002-3	11/22/13	10778	34	2	280	278	42	0	252	252	52	2	290	288																	5580	46	0	156	156
8	3A002-4	11/22/13	10076	46	2	314	312	38	4	240	236	38	0	240	240																	5580	46	0	156	156
8	3A005-1	11/22/13	12996	46	0	266	266	66	0	290	290	38	0	260	260																	5580	46	0	156	156
8	3A005-2	11/22/13	10892	56	0	294	294	80	2	254	252	66	0	266	266																	5580	46	0	156	156
8	3A005-3	11/22/13	14314	66	0	300	300	48	0	252	252	66	0	274	274																	5580	46	0	156	156
8	3A005-4	11/21/13	6316	66	0	266	266	60	0	302	302	68	0	300	300																	11548	42	2	212	210
8	3A006-1	11/21/13	11770	40	0	308	308	54	0	340	340	46	2	282	280																	11548	42	2	212	210
8	3A006-2	11/21/13	13244	50	2	324	322	74	0	410	410	64	0	354	354																	11548	42	2	212	210
8	3A006-3	11/21/13	12302	72	0	392	392	64	0	360	360	48	0	330	330																	11548	42	2	212	210
8	3A006-4	11/21/13	12118	52	0	334	334	58	0	350	350	50	0	330	330																	11548	42	2	212	210
8	3A007-1	11/21/13	11656	54	2	334	332	46	2	302	300	54	2	312	310																	11548	42	2	212	210
8	3A007-2	11/21/13	11736	50	0	284	284	52	2	300	298	60	0	320	320																	11548	42	2	212	210
8	3A007-3	11/21/13	12490	70	2	308	306	66	2	320	318	48	0	306	306																	11548	42	2	212	210
8	3A013-1	12/2/13	10556	44	0	240	240	64	2	260	258	54	0	262	262																	6114	38	0	182	182
8	3A013-2	12/2/13	11468	44	0	216	216	46	0	260	260	58	2	316	314																	6114	38	0	182	182
8	3A017-1	11/21/13	10848	42	0	250	250	56	2	262	260	66	0	280	280																	11548	42	2	212	210

Soil Sample Radiation Survey Data Table

			0 ft	0-.5 ft (cpm)				0.5-2.0ft (cpm)				2.0-3.0 ft (cpm)				3.0-4.0 ft (cpm)				4.0-5.0 ft (cpm)				3.0-5.0 ft (cpm)				5.0-7.0 ft (cpm)				Background cpm				
			44-10	44-9	43-93			44-9	43-93			44-9	43-93			44-9	43-93			44-9	43-93			44-9	43-93			44-9	43-93			44-10	44-9	43-93		
EU	NEW Boring	Date	cpm	cpm	α	β+α	β	cpm	α	β+α	β	cpm	α	β+α	β	cpm	α	β+α	β	cpm	α	β+α	β	cpm	α	β+α	β	cpm	α	β+α	β	cpm	cpm	α	β+α	β
8	3A017-2	11/21/13	13492	42	0	284	284	56	0	334	334	60	0	326	326																	11548	42	2	212	210
8	3A017-3	11/21/13	18182	62	0	340	340	62	2	336	334	60	0	342	342																	11548	42	2	212	210
8	3A017-4	11/21/13	10558	70	0	368	368	62	2	342	340	68	0	336	336																	11548	42	2	212	210
8	3A017-5	6/20/14	12620	82	2	292	290	82	2	300	298	68	0	254	254	52	2	256	254													7972	34	0	204	204
8	3A017-6	6/20/14	11916	86	2	302	300	66	0	236	236	62	0	264	264	52	0	264	264													7972	34	0	204	204
8	3A017-7	6/20/14	12552	66	4	306	302	60	6	286	280	50	0	294	294	72	4	250	246													7972	34	0	204	204
8	3A020-1	11/20/13	11218	62	2	282	280	62	2	312	310	72	0	344	344																	10150	62	2	180	178
8	3A020-2	Not Sampled																																		
8	3A020-3	11/21/13	10456	50	2	280	278	58	0	336	336	60	0	380	380																	11548	42	2	212	210
8	3A020-4	11/21/13	12976	46	4	328	324	68	0	352	352	52	0	316	316																	11548	42	2	212	210
8	3A020-5	6/20/14	13138	82	4	318	314	56	0	282	282	56	2	272	270	62	2	272	270													7972	34	0	204	204
8	3A023-1	11/21/13	11572	48	0	260	260	62	0	374	374	60	0	356	356																	11548	42	2	212	210
8	3A023-2	11/21/13	10382	66	2	370	368	50	0	312	312	60	0	360	360																	11548	42	2	212	210
8	3A023-3	11/21/13	9826	68	0	348	348	62	0	352	352	68	0	356	356																	11548	42	2	212	210
8	3B003-1	12/12/13	9576	50	0	176	176	52	0	236	236	50	0	256	256																	5278	28	0	170	170
8	3B003-2	12/12/13	11066	34	2	220	218	62	0	262	262	64	4	214	210																	5278	28	0	170	170
8	3B003-3	6/23/14	10370	70	12	224	212	72	4	176	172	68	0	150	150	54	0	178	178													7972	34	0	204	204
8	3B003-4	6/23/14	7346	66	4	180	176	52	2	200	198	52	0	148	148	48	2	158	156													7816	38	0	106	106
8	3B004-1	12/11/13	10382	54	2	254	252	56	0	276	276	58	0	254	254																	6556	40	0	186	186
8	3B004-2	12/11/13	10144	42	6	296	290	58	0	306	306	46	0	314	314																	6556	40	0	186	186
8	3B004-3	12/11/13	10448	52	2	278	276	52	0	284	284	52	2	298	296																	6556	40	0	186	186
8	3B011-1	12/12/13	9982	54	0	272	272	52	2	236	234	64	0	232	232																	5278	28	0	170	170
8	3B011-2	12/12/13	8006	34	0	190	190	50	2	266	264	46	0	218	218																	5278	28	0	170	170
8	3B011-3	6/20/14	9664	54	4	224	220	46	2	174	172	42	2	210	208	56	2	176	174													7972	34	0	204	204
8	3B011-4	6/20/14	7236	82	2	324	322	60	0	226	226	40	2	312	310	48	2	246	244													7972	34	0	204	204
8	3B013-1	12/12/13	10228	48	6	222	216	48	0	272	272	58	2	242	240																	5278	28	0	170	170
8	3B013-2	12/12/13	8454	42	0	214	214	58	0	268	268	36	0	310	310																	5278	28	0	170	170
8	3B013-3	12/12/13	7892	42	0	206	206	54	2	236	234	54	2	266	264																	5278	28	0	170	170
8	3B013-4	12/12/13	9610	46	0	264	264	46	0	248	248	36	0	208	208																	5278	28	0	170	170
8	3B015-1	12/13/13	10750	50	2	298	296	68	0	254	254	58	0	314	314																	7366	38	2	154	152
8	3B015-2	12/13/13	10658	38	6	260	254	70	4	316	312	42	2	324	322																	7366	38	2	154	152
8	3B015-3	12/13/13	9992	54	0	220	220	62	2	306	304	60	2	292	290																	7366	38	2	154	152
8	3B015-4	12/13/13	11206	48	2	238	236	62	2	276	274	50	2	208	206																	7366	38	2	154	152
8	3C006-1	12/10/13	8860	44	0	166	166	56	2	270	268	46	0	228	228																	5086	36	2	156	154
8	3C006-2	12/10/13	6028	58	0	214	214	52	2	238	236	46	0	208	208																	5086	36	2	156	154
8	3C006-3	12/10/13	8758	44	2	206	204	48	0	228	228	42	0	292	292																	5086	36	2	156	154
8	3C006-4	6/23/14	9800	78	2	192	190	56	0	230	230	36	0	182	182	56	0	136	136													7816	38	0	106	106
8	3C007-1	12/10/13	5768	48	0	194	194	28	0	200	200	36	2	292	290																	5086	36	2	156	154
8	3C007-2	12/10/13	9704	58	0	212	212	66	2	266	264	52	2	278	276																	5086	36	2	156	154
8	3C008-1	12/10/13	5404	46	0	184	184	58	0	232	232	44	2	258	256																	5086	36	2	156	154
8	3C008-2	12/10/13	9906	50	0	206	206	66	2	234	232	34	2	296	294																	5086	36	2	156	154
8	3C008-3	12/10/13	8784	72	4	274	270	54	0	248	248	68	2	252	250																	5086	36	2	156	154

			0 ft	0-.5 ft (cpm)				0.5-2.0ft (cpm)				2.0-3.0 ft (cpm)				3.0-4.0 ft (cpm)				4.0-5.0 ft (cpm)				3.0-5.0 ft (cpm)				5.0-7.0 ft (cpm)				Background cpm				
			44-10	44-9	43-93			44-9	43-93			44-9	43-93			44-9	43-93			44-9	43-93			44-9	43-93			44-9	43-93			44-10	44-9	43-93		
EU	NEW Boring	Date	cpm	cpm	α	β+α	β	cpm	α	β+α	β	cpm	α	β+α	β	cpm	α	β+α	β	cpm	α	β+α	β	cpm	α	β+α	β	cpm	α	β+α	β	cpm	cpm	α	β+α	β
8	3C011-1	12/11/13	6176	48	0	202	202	40	0	220	220	30	2	196	194																	5718	60	0	112	112
8	3C014-1	12/11/13	6698	36	2	188	186	44	2	240	238	40	0	230	230																	5718	60	0	112	112
8	3C014-2	12/11/13	9422	52	0	240	240	54	0	264	264	42	0	204	204																	5718	60	0	112	112
8	3C014-3	12/11/13	9874	46	4	224	220	40	2	246	244	44	0	250	250																	5718	60	0	112	112
8	3C014-4	12/11/13	8288	30	2	180	178	68	0	260	260	66	0	274	274																	5718	60	0	112	112
8	3C014-5	6/23/14	7904	70	4	166	162	40	0	148	148	46	0	144	144	40	0	150	150													7816	38	0	106	106
8	3C014-6	6/23/14	10396	46	4	220	216	62	0	228	228	46	2	212	210	56	0	190	190													7816	38	0	106	106
8	3D001-1	12/17/13	9456	70	0	260	260	70	2	282	280	60	0	218	218																	6076	44	0	152	152
8	3D001-2	12/17/13	11496	48	0	222	222	54	2	218	216	60	0	254	254																	6076	44	0	152	152
8	3D001-3	12/17/13	11334	50	0	246	246	30	2	186	184	46	0	278	278																	6076	44	0	152	152
8	3D001-4	12/17/13	9476	50	2	220	218	38	0	214	214	54	2	262	260																	6076	44	0	152	152
8	3D004-1	12/17/13	9862	42	0	222	222	38	0	204	204	64	0	264	264																	6076	44	0	152	152
8	3D004-2	12/17/13	17250	72	0	222	222	46	0	268	268	48	0	266	266																	6076	44	0	152	152
8	3D004-3	12/17/13	8460	48	4	228	224	52	0	234	234	62	0	258	258																	6076	44	0	152	152
8	3D004-4	12/17/13	8148	46	0	176	176	70	2	186	184	0	0	0	0																	6076	44	0	152	152
8	3D004-5	6/23/14	10426	56	12	232	220	62	4	236	232	54	0	180	180	56	2	222	220													7746	38	2	118	116
8	3D006-1	12/11/13	5204	38	4	208	204	56	0	200	200	40	2	232	230																	5718	60	0	112	112
8	3D006-2	12/11/13	6296	48	0	196	196	42	0	166	166	54	2	274	272																	5718	60	0	112	112
8	3D006-3	12/11/13	6852	38	0	202	202	46	0	232	232	64	2	254	252																	5718	60	0	112	112
8	3D006-4	12/11/13	6252	40	0	242	242	54	0	264	264	46	0	214	214																	5718	60	0	112	112
8	3D006-5	6/23/14	6850	66	2	176	174	58	0	154	154	48	2	166	164	50	0	162	162													7816	38	0	106	106
8	3D006-6	6/23/14	8746	56	0	192	192	54	0	146	146	50	2	198	196	48	2	154	152													7816	38	0	106	106
8	3D007-1	12/10/13	8480	78	0	252	252	58	2	248	246	52	2	306	304																	5086	36	2	156	154
8	3D007-2	12/10/13	9334	34	0	216	216	68	0	256	256	48	0	266	266																	5086	36	2	156	154
8	3D007-3	12/10/13	8530	50	0	216	216	48	0	174	174	60	2	288	286																	5086	36	2	156	154
8	GWS-10	Not Sampled Concrete																																		
8	GWS-15	12/13/13	16664	32	0	264	264	26	0	230	230	64	0	298	298																	8310	28	2	172	170
8	GWS-26	6/20/14	34290	582	0	2900	2900	346	2	870	868	50	0	258	258	74	0	254	254													7972	34	0	204	204
8	GWS-5	11/25/13	8998	46	0	282	282	48	0	304	304	42	0	274	274																	8758	40	0	200	200
8	SP18	12/13/13	23990	68	4	350	346	66	0	282	282	56	2	298	296																	8310	28	2	172	170
8	SP-18-1	6/19/14	12524	78	6	298	292	86	4	264	260	46	0	250	250	74	2	266	264	66	2	242	240	66	4	280	276					9198	46	0	224	224
8	SP-18-2	6/19/14	6940	62	0	268	268	46	0	226	226	74	0	242	242	62	0	250	250	36	0	208	208	66	2	288	286					9198	46	0	224	224
8	SP-18-3	6/19/14	9054	76	2	278	276	58	0	240	240	60	0	250	250	38	0	210	210	46	0	250	250									9198	46	0	224	224
8	SP-18-4	6/20/14	9308	58	4	296	292	62	2	246	244	46	0	286	286	56	0	246	246	58	2	200	198									7972	34	0	204	204
8	TB301_01-1	12/12/13	8454	42	2	250	248	48	0	266	266	50	2	208	206																	5278	28	0	170	170
8	TB301_01-2	12/12/13	8558	74	0	246	246	50	0	240	240	78	0	238	238																	5278	28	0	170	170
8	TB301_01-3	12/12/13	7782	56	0	228	228	58	2	254	252	62	0	230	230																	5278	28	0	170	170
9	913-1	11/18/13	9886	62	0	204	204	64	0	186	186	44	4	228	224																	6540	52	2	124	122
9	913-2	11/18/13	9692	62	0	158	158	52	0	214	214	46	2	204	202																	6540	52	2	124	122
9	913-3	11/18/13	8614	56	2	164	162	56	0	182	182	54	2	146	144																	6540	52	2	124	122
10	MH06-10	11/11/13	10394	66	0	278	278	74	2	324	322	98	2	442	440	78	2	334	332	80	4	272	268									8480	50	2	116	114
10	MH06-18	11/12/13	9698	60	0	178	178	70	0	172	172	62	0	184	184																	9062	60	0	100	100

			0 ft	0-.5 ft (cpm)				0.5-2.0ft (cpm)				2.0-3.0 ft (cpm)				3.0-4.0 ft (cpm)				4.0-5.0 ft (cpm)				3.0-5.0 ft (cpm)				5.0-7.0 ft (cpm)				Background cpm				
			44-10	44-9	43-93			44-9	43-93			44-9	43-93			44-9	43-93			44-9	43-93			44-9	43-93			44-9	43-93			44-10	44-9	43-93		
EU	NEW Boring	Date	cpm	cpm	α	β+α	β	cpm	α	β+α	β	cpm	α	β+α	β	cpm	α	β+α	β	cpm	α	β+α	β	cpm	α	β+α	β	cpm	α	β+α	β	cpm	cpm	α	β+α	β
10	MH06-25	11/12/13	9288	44	0	172	172	44	2	176	174	60	0	156	156																	9062	60	0	100	100
10	TWP937-1	11/18/13	9028	82	2	148	146	48	2	160	158	60	2	156	154																	5432	40	2	106	104
10	TWP937-2	11/18/13	10112	54	0	170	170	46	0	204	204	56	0	208	208																	5432	40	2	106	104
10	TWP937-3	11/18/13	10188	56	0	158	158	62	2	184	182	32	2	218	216																	5432	40	2	106	104
10	TWP937-4	11/18/13	9924	28	0	218	218	54	2	192	190	68	2	174	172																	5432	40	2	106	104
11	2A003-1	12/4/13	6264	36	0	226	226	44	2	272	270	58	4	358	354																	4282	18	0	128	128
11	2A003-2	12/4/13	7434	40	2	276	274	32	0	224	224	48	2	298	296																	4282	18	0	128	128
11	2A003-3	12/4/13	6634	36	2	234	232	56	2	328	326	48	2	310	308																	4282	18	0	128	128
11	2A003-4	6/18/14	13366	74	2	202	200	52	2	178	176	58	2	196	194																	6144	36	0	150	150
11	2A003-5	6/18/14	11574	48	4	168	164	62	2	228	226	66	2	230	228																	6144	36	0	150	150
11	2A006-1	11/13/13	8116	50	0	116	116	40	0	162	162	36	0	162	162																	4794	28	0	100	100
11	2A006-2	11/13/13	12668	56	0	150	150	40	2	144	142	52	0	132	132																	4794	28	0	100	100
11	2A006-3	11/13/13	10406	58	0	118	118	64	0	174	174	68	0	172	172																	4794	28	0	100	100
11	2A006-4	11/13/13	11288	42	0	172	172	54	0	164	164	48	0	172	172																	4794	28	0	100	100
11	2A006-5	6/17/14	10530	92	4	286	282	50	0	268	268	50	0	254	254																	7624	44	0	174	174
11	2A006-6	6/17/14	21870	92	4	436	432	80	0	322	322	54	4	266	262																	7624	44	0	174	174
11	2A008-5	6/18/14	12310	68	0	342	342	40	4	226	222	66	0	230	230																	6144	36	0	150	150
11	2A008-8	6/18/14	11750	58	2	236	234	50	0	210	210	60	2	220	218																	6144	36	0	150	150
11	826-1	12/6/13	7804	64	2	240	238	46	0	202	202	72	0	306	306																	7492	32	0	170	170
11	826-2	12/6/13	10326	46	0	240	240	72	0	304	304	50	0	316	316																	7492	32	0	170	170
11	826-3	12/6/13	8322	70	0	234	234	52	0	242	242	64	0	336	336																	7492	32	0	170	170
11	826-4	12/6/13	11180	62	0	278	278	60	0	336	336	68	0	316	316																	7492	32	0	170	170
11	827-1	12/5/13	10938	52	0	280	280	60	0	302	302	0	0	0	0																	6364	44	0	142	142
11	827-2	12/4/13	8930	58	2	292	290	52	0	336	336	58	2	316	314																	6752	26	0	176	176
11	827-3	12/5/13	9514	58	0	296	296	64	2	262	260	70	0	280	280																	6364	44	0	142	142
11	827-4	12/5/13	10676	52	2	232	230	58	2	292	290	42	0	238	238																	6364	44	0	142	142
11	827-5	12/5/13	8706	62	0	240	240	46	2	336	334	54	0	248	248																	6364	44	0	142	142
11	830-1	12/5/13	7024	38	2	238	236	42	2	224	222	50	0	314	314																	6364	44	0	142	142
11	830-2	12/5/13	9640	34	2	270	268	38	0	318	318	56	0	282	282																	6364	44	0	142	142
11	8A004-1	11/13/13	13914	54	2	158	156	88	0	170	170	40	0	186	186																	4794	28	0	100	100
11	8A004-2	11/13/13	13342	44	0	166	166	52	0	192	192	50	0	190	190																	4794	28	0	100	100
11	8A004-3	11/13/13	13788	64	0	134	134	66	0	184	184	72	0	196	196																	4794	28	0	100	100
11	8A004-4	11/13/13	13526	64	2	172	170	50	2	186	184	60	2	178	176																	4794	28	0	100	100
11	8A004-5	6/18/14	10832	60	0	262	262	82	2	218	216	56	0	262	262																	6144	36	0	150	150
11	8A004-6	6/18/14	10686	52	0	276	276	66	2	218	216	44	0	180	180																	6144	36	0	150	150
11	8A004-7	6/18/14	13006	90	0	232	232	76	2	212	210	46	2	250	248																	6144	36	0	150	150
11	8A009-1	12/6/13	10066	58	2	258	256	58	2	298	296	58	0	300	300																	7492	32	0	170	170
11	8A009-2	12/6/13	9920	60	0	296	296	60	0	264	264	38	0	328	328																	7492	32	0	170	170
11	8A009-3	12/6/13	9558	54	0	268	268	56	0	282	282	84	2	312	310																	7492	32	0	170	170
11	8A009-4	12/6/13	8190	58	0	236	236	76	2	316	314	40	0	342	342																	7492	32	0	170	170
11	8H001-1	12/4/13	9104	48	0	258	258	82	0	386	386	54	2	326	324																	6752	26	0	176	176
11	8H001-2	12/5/13	11640	50	0	268	268	0	0	0	0	0	0	0	0																	6364	44	0	142	142

			0 ft	0-.5 ft (cpm)				0.5-2.0ft (cpm)				2.0-3.0 ft (cpm)				3.0-4.0 ft (cpm)				4.0-5.0 ft (cpm)				3.0-5.0 ft (cpm)				5.0-7.0 ft (cpm)				Background cpm				
			44-10	44-9	43-93			44-9	43-93			44-9	43-93			44-9	43-93			44-9	43-93			44-9	43-93			44-9	43-93			44-10	44-9	43-93		
EU	NEW Boring	Date	cpm	cpm	α	β+α	β	cpm	α	β+α	β	cpm	α	β+α	β	cpm	α	β+α	β	cpm	α	β+α	β	cpm	α	β+α	β	cpm	α	β+α	β	cpm	cpm	α	β+α	β
11	8H001-3	12/4/13	10234	40	0	318	318	30	0	252	252	60	0	294	294																	6752	26	0	176	176
11	8H001-4	12/5/13	8756	28	0	230	230	0	0	0	0	0	0	0	0																	6364	44	0	142	142
11	8H001-5	12/5/13	10746	50	2	270	268	66	2	300	298	56	0	286	286																	6364	44	0	142	142
11	8H001-6	12/5/13	11538	58	2	218	216	62	0	282	282	60	0	270	270																	6364	44	0	142	142
11	8H002-1	12/4/13	12306	58	0	312	312	68	2	336	334	90	2	394	392																	12250	54	2	212	210
11	8H002-2	12/4/13	10540	58	0	272	272	82	2	380	378	60	0	354	354																	12250	54	2	212	210
11	8H002-3	12/4/13	9568	52	2	258	256	38	0	200	200	58	0	284	284																	12250	54	2	212	210
11	8H002-4	12/4/13	11024	70	2	364	362	82	0	406	406	46	2	234	232																	12250	54	2	212	210
11	GWS-11	12/5/13	19896	64	0	290	290	56	0	234	234	46	2	260	258																	6364	44	0	142	142
11	GWS-11-1	6/19/14	10204	100	2	272	270	56	0	172	172	66	0	212	212																	9198	46	0	224	224
11	GWS-12	12/5/13	13930	68	4	338	334	80	0	352	352	68	2	360	358																	12260	52	4	242	238
11	GWS-13	12/5/13	13218	90	4	412	408	76	2	298	296	92	0	324	324																	12260	52	4	242	238
11	MH06-1	11/11/13	10580	64	10	250	240	84	12	236	224	76	4	264	260																	8480	42	0	132	132
11	MH06-11	11/11/13	8254	32	0	126	126	42	2	124	122	62	0	200	200	86	2	248	246	64	2	216	214									8480	50	2	116	114
11	MH06-12	11/12/13	9176	42	0	180	180	76	2	212	210	66	0	206	206																	9062	60	0	100	100
11	MH06-13	11/12/13	9416	68	0	210	210	52	0	234	234	82	2	232	230																	9062	60	0	100	100
11	MH06-14	11/12/13	7646	48	4	146	142	54	2	162	160	50	0	208	208																	9062	60	0	100	100
11	MH06-15	11/12/13	9870	64	0	126	126	44	0	184	184	50	0	180	180																	9062	60	0	100	100
11	MH06-16	11/12/13	10182	68	4	166	162	56	2	206	204	66	0	172	172																	9062	60	0	100	100
11	MH06-17	11/12/13	9914	54	0	144	144	44	2	184	182	52	0	150	150																	9062	60	0	100	100
11	MH06-19	11/12/13	5890	48	0	76	76	36	0	136	136	74	0	196	196																	9062	60	0	100	100
11	MH06-2	11/11/13	11730	102	6	222	216	126	4	398	394	90	6	412	406	110	10	408	398	74	2	290	288									8480	50	2	116	114
11	MH06-20	11/12/13	9444	48	2	142	140	46	0	162	162	40	0	172	172																	9062	60	0	100	100
11	MH06-21	11/12/13	10104	64	0	146	146	68	0	186	186	70	0	186	186																	9062	60	0	100	100
11	MH06-22	11/12/13	9990	64	0	150	150	64	0	172	172	48	0	168	168																	9062	60	0	100	100
11	MH06-23	11/12/13	9518	50	0	132	132	76	2	182	180	58	0	170	170																	9062	60	0	100	100
11	MH06-24	11/12/13	9254	38	2	144	142	54	0	168	168	60	0	182	182																	9062	60	0	100	100
11	MH06-26	11/12/13	6284	50	0	112	112	70	4	210	206	60	2	260	258	96	0	244	244	48	0	142	142									9062	60	0	100	100
11	MH06-27	11/12/13	9850	58	0	158	158	62	0	176	176	60	2	186	184																	9062	60	0	100	100
11	MH06-28	11/12/13	9088	46	0	114	114	42	2	198	196	60	0	182	182																	9062	60	0	100	100
11	MH06-29	11/12/13	9714	56	0	152	152	72	0	236	236	78	0	198	198																	9062	60	0	100	100
11	MH06-3	11/11/13	6810	46	0	130	130	74	2	250	248	60	2	258	256	86	4	236	232	36	2	202	200									8480	50	2	116	114
11	MH06-30	11/12/13	8000	40	0	150	150	90	0	250	250	66	2	230	228	60	0	180	180													9062	60	0	100	100
11	MH06-31	11/13/13	8052	50	0	130	130	62	0	186	186	56	0	178	178																	4794	28	0	100	100
11	MH06-32	11/13/13	8550	48	0	148	148	60	0	194	194	50	0	182	182																	4794	28	0	100	100
11	MH06-33	11/13/13	7292	38	2	158	156	48	0	202	202	52	0	168	168																	4794	28	0	100	100
11	MH06-34	11/13/13	9846	44	2	148	146	54	0	172	172	64	2	182	180																	4794	28	0	100	100
11	MH06-35	11/13/13	9460	40	0	122	122	44	0	140	140	62	0	164	164																	4794	28	0	100	100
11	MH06-4	11/11/13	9638	78	2	212	210	66	4	208	204	68	0	214	214																	8480	50	2	116	114
11	MH06-5	11/11/13	7948	76	2	178	176	44	0	202	202	64	2	206	204																	8480	50	2	116	114
11	MH06-6	11/11/13	9626	60	2	234	232	56	0	170	170	60	2	204	202																	8480	50	2	116	114
11	MH06-7	11/11/13	9304	66	0	202	202	56	2	188	186	52	2	168	166																	8480	50	2	116	114

			0 ft	0-.5 ft (cpm)				0.5-2.0ft (cpm)				2.0-3.0 ft (cpm)				3.0-4.0 ft (cpm)				4.0-5.0 ft (cpm)				3.0-5.0 ft (cpm)				5.0-7.0 ft (cpm)				Background cpm				
			44-10	44-9	43-93			44-9	43-93			44-9	43-93			44-9	43-93			44-9	43-93			44-9	43-93			44-9	43-93			44-10	44-9	43-93		
EU	NEW Boring	Date	cpm	cpm	α	β+α	β	cpm	α	β+α	β	cpm	α	β+α	β	cpm	α	β+α	β	cpm	α	β+α	β	cpm	α	β+α	β	cpm	α	β+α	β	cpm	cpm	α	β+α	β
11	MH06-8	11/11/13	8792	60	0	192	192	88	0	206	206	52	0	188	188																	8480	50	2	116	114
11	MH06-9	11/11/13	8542	50	0	182	182	56	0	180	180	38	0	208	208																	8480	50	2	116	114
11	SP17	12/5/13	12430	68	0	254	254	56	2	308	306	56	0	286	286																	6364	44	0	142	142
11	SP9	11/13/13	21280	66	0	138	138	82	4	294	290	96	0	220	220	48	0	214	214													4794	28	0	100	100
11	TB810_03-1	11/13/13	8558	36	2	160	158	56	0	180	180	48	0	182	182																	4794	28	0	100	100
11	TB810_03-2	11/13/13	9992	46	0	176	176	40	0	186	186	52	0	192	192																	4794	28	0	100	100
11	TB810_03-3	11/13/13	9278	46	0	120	120	60	0	170	170	48	0	180	180																	4794	28	0	100	100
11	TB810_03-4	11/14/13	8648	58	0	172	172	66	0	176	176	62	0	180	180																	4842	32	2	106	104
11	TS812_04-1	12/5/13	10766	56	0	302	302	54	0	306	306	54	0	304	304																	6364	44	0	142	142
11	TS812_04-2	12/5/13	8532	54	0	314	314	54	0	228	228	76	2	284	282																	6364	44	0	142	142
11	TS812_04-3	12/5/13	6506	48	4	258	254	46	4	276	272	78	6	336	330																	6364	44	0	142	142
11	TS812_04-4	12/5/13	5840	40	0	240	240	72	0	312	312	66	2	272	270																	6364	44	0	142	142
12	205-1	12/16/13	8582	44	2	250	248	50	6	300	294	54	0	280	280																	8606	34	0	178	178
12	205-2	12/16/13	13792	46	0	296	296	56	0	270	270	60	0	270	270																	8606	34	0	178	178
12	205-3	12/16/13	11112	52	0	260	260	50	2	384	382	54	0	282	282																	8606	34	0	178	178
12	205-4	12/16/13	11188	56	0	224	224	58	2	304	302	42	0	236	236																	8606	34	0	178	178
12	218-1	12/3/13	9918	50	0	312	312	60	2	336	334	68	0	346	346																	5638	38	2	152	150
12	218-2	12/3/13	10640	56	0	324	324	66	0	358	358	48	0	310	310																	5638	38	2	152	150
12	218-3	12/3/13	11292	38	0	280	280	48	0	302	302	54	0	362	362																	5638	38	2	152	150
12	218-4	12/3/13	11570	42	0	272	272	54	0	332	332	74	2	402	400																	5638	38	2	152	150
12	219-1	12/13/13	10472	56	0	232	232	54	2	236	234	42	0	244	244																	6028	56	0	156	156
12	219-2	12/13/13	10948	52	0	228	228	56	0	226	226	56	0	230	230																	6028	56	0	156	156
12	219-3	12/13/13	11076	52	0	244	244	50	0	276	276	56	0	248	248																	6028	56	0	156	156
12	219-4	12/13/13	11276	64	0	206	206	76	0	258	258	62	2	222	220																	6028	56	0	156	156
12	220-3	12/3/13	9750	48	2	346	344	70	0	418	418	60	0	380	380																	5638	38	2	152	150
12	2A008-1	12/3/13	9162	66	0	340	340	74	2	392	390	72	0	380	380																	10620	48	0	198	198
12	2A008-2	12/3/13	14516	52	0	316	316	48	0	298	298	62	2	344	342																	10620	48	0	198	198
12	2A008-3	12/3/13	11938	68	0	342	342	68	2	336	334	84	0	398	398	58	0	320	320													10620	48	0	198	198
12	2A008-4	12/3/13	14602	66	0	356	356	66	0	364	364	70	2	352	350																	10620	48	0	198	198
12	2A008-6	6/18/14	14142	62	2	250	248	54	0	226	226	58	0	274	274																	6144	36	0	150	150
12	2A008-7	6/18/14	14452	52	0	244	244	42	0	220	220	46	0	226	226																	6144	36	0	150	150
12	2B002-1	12/16/13	9156	50	0	228	228	60	2	314	312	72	0	244	244																	8606	34	0	178	178
12	2B002-2	12/16/13	8872	52	0	236	236	60	0	298	298	54	0	250	250																	8606	34	0	178	178
12	2B002-3	6/18/14	13282	62	0	252	252	58	4	226	222	50	0	246	246																	6144	36	0	150	150
12	2B002-4	6/18/14	10588	48	0	228	228	62	0	242	242	170	2	258	256																	6144	36	0	150	150
12	2D012-1	12/17/13	9946	54	0	264	264	48	2	336	334	76	0	302	302																	10088	66	4	216	212
12	2D012-2	12/17/13	10254	50	0	296	296	62	6	384	378	68	0	304	304																	10088	66	4	216	212
12	2D012-3	Not Sampled																																		
12	2D012-4	12/17/13	15722	68	0	336	336	66	0	338	338	76	0	398	398																	10088	66	4	216	212
12	2D013-1	12/17/13	16710	116	4	384	380	70	0	410	410	0	0	0	0																	10088	66	4	216	212
12	2D013-2	12/17/13	10542	44	0	260	260	48	0	268	268	50	0	294	294																	10088	66	4	216	212
12	2D013-3	Not Sampled																																		

			0 ft	0-.5 ft (cpm)				0.5-2.0ft (cpm)				2.0-3.0 ft (cpm)				3.0-4.0 ft (cpm)				4.0-5.0 ft (cpm)				3.0-5.0 ft (cpm)				5.0-7.0 ft (cpm)				Background cpm				
			44-10	44-9	43-93			44-9	43-93			44-9	43-93			44-9	43-93			44-9	43-93			44-9	43-93			44-9	43-93			44-10	44-9	43-93		
EU	NEW Boring	Date	cpm	cpm	α	β+α	β	cpm	α	β+α	β	cpm	α	β+α	β	cpm	α	β+α	β	cpm	α	β+α	β	cpm	α	β+α	β	cpm	α	β+α	β	cpm	cpm	α	β+α	β
12	2D013-4	12/17/13	12126	76	0	280	280	56	2	322	320	74	0	274	274																	10088	66	4	216	212
12	GWS-27	6/18/14	10286	64	2	258	256	40	2	200	198	70	2	266	264																	6144	36	0	150	150
13	203-1	12/4/13	10694	36	0	232	232	74	0	336	336	62	0	304	304																	5996	30	0	154	154
13	203-2	12/4/13	9854	36	2	238	236	66	4	342	338	64	0	320	320																	5996	30	0	154	154
13	203-3	12/4/13	10322	46	2	252	250	44	0	250	250	54	2	258	256																	5996	30	0	154	154
13	203-4	12/4/13	9816	50	0	264	264	64	2	334	332	60	0	306	306																	5996	30	0	154	154
13	220-1	12/3/13	11080	48	0	294	294	36	2	276	274	54	0	320	320																	5638	38	2	152	150
13	220-2	12/3/13	10550	40	2	286	284	48	2	308	306	76	0	368	368																	5638	38	2	152	150
13	220-4	12/3/13	5842	44	0	300	300	74	2	436	434	72	0	398	398																	5638	38	2	152	150
13	221-1	12/3/13	6574	32	0	204	204	40	0	324	324	40	0	308	308																	4736	24	0	178	178
13	221-2	12/3/13	4614	40	0	324	324	54	0	336	336	54	2	324	322																	4736	24	0	178	178
13	221-3	12/3/13	9234	26	0	292	292	64	2	384	382	36	2	304	302																	4736	24	0	178	178
13	221-4	12/3/13	10096	56	0	328	328	56	0	312	312	64	4	348	344																	4736	24	0	178	178
13	GWS-14	12/3/13	5268	40	2	294	292	26	0	228	228	54	0	326	326																	4736	24	0	178	178
14	2B014-1	12/18/13	8490	38	0	286	286	52	4	240	236	0	0	0	0																	6654	44	0	192	192
14	2B014-2	12/18/13	9730	44	0	0	0	50	0	0	0	86	0	0	0																	6654	44	0	192	192
14	2B014-3	12/18/13	7794	50	0	220	220	64	0	284	284	58	2	286	284																	6654	44	0	192	192
14	2B014-4	12/18/13	9056	60	4	306	302	36	10	266	256	0	0	0	0																	6654	44	0	192	192
14	816-1	12/16/13	10310	62	0	256	256	38	0	370	370	60	0	308	308																	6060	48	4	208	204
14	816-2	12/16/13	10292	62	0	326	326	64	0	274	274	46	2	256	254																	6060	48	4	208	204
14	816-3	12/16/13	6252	48	0	268	268	66	0	228	228	64	4	328	324																	6060	48	4	208	204
14	816-4	12/16/13	7442	46	2	286	284	46	0	290	290	54	0	288	288																	6060	48	4	208	204
14	8B001-1	12/16/13	10802	60	0	256	256	58	0	264	264	56	0	272	272																	6060	48	4	208	204
14	8B001-2	12/16/13	13846	56	0	238	238	56	2	410	408	50	0	332	332																	6060	48	4	208	204
14	8B001-3	12/16/13	15344	74	2	270	268	84	0	292	292	72	0	296	296																	6060	48	4	208	204
14	8B001-4	12/16/13	8056	38	0	292	292	68	2	294	292	86	2	348	346																	6060	48	4	208	204
14	8B001-5	6/19/14	16656	46	0	288	288	78	2	306	304	64	2	258	256	82	6	268	262	44	2	234	232									9198	46	0	224	224
14	8B001-6	6/19/14	9318	58	0	290	290	44	0	284	284	56	0	302	302	64	0	254	254	48	2	218	216									10570	46	0	224	224
14	8B001-7	6/19/14	8584	52	2	274	272	84	0	248	248	64	0	292	292	74	0	330	330	52	0	274	274									10570	46	0	224	224

Appendix E-6-2

Soil Sample Radiation Field Sheets

NFSS Soil Sample Scan 3ft

Date 110513 **Technici** [redacted]

Meter Type Ludlum 2221 **PROBE** Ludlum 44-10

METER S/N 148443 **PROBE S/N** 150422 **Count time** 30 SEC

Meter Type M12 **PROBE** Ludlum 44-9

METER S/N 102868 **PROBE S/N** 01512 **Count time** 30 SEC

Meter Type Ludlum 2360 **PROBE** Ludlum 43-93

METER S/N 276943 **PROBE S/N** 197430 **Count time** 30 SEC

EU	Boring ID	Depth (ft)	44-10 Counts	44-9 Counts	43-93 alpha	43-93 both	43-93 beta	Notes
Background			3844	34	2	60	62	
6	606.3	Surface	4971					
		0-0.5		33	1	94	95	
		0.5-2.0		41	0	100	100	
		2.0-3.0		39	2	75	73	
6	829.3	Surface	4971					
		0-0.5		23	1	100	99	
		0.5-2.0		30	2	81	79	
		2.0-3.0		20	4	83	79	
6	828.2	Surface	4032					
		0-0.5		29	1	73	72	
		0.5-2.0		24	1	82	81	
		2.0-3.0		19	0	99	99	
6	828.3	Surface	3964					
		0-0.5		16	1	98	97	
		0.5-2.0		27	1	82	81	
		2.0-3.0		24	0	82	82	
6	828.4	Surface	4305					
		0-0.5		26	3	86	83	
		0.5-2.0		38	2	95	93	
		2.0-3.0		29	1	82	81	
		Surface						
		0-0.5						
		0.5-2.0						
		2.0-3.0						
		Surface						
		0-0.5						
		0.5-2.0						
		2.0-3.0						

NFSS Soil Sample Scan 3ft

Date 110613 **Technician** [redacted]

Meter Type Ludlum 2221 **PROBE** Ludlum 44-10

METER S/N 148443 **PROBE S/N** 150422 **Count time** 30 SEC

Meter Type M12 **PROBE** Ludlum 44-9

METER S/N 102868 **PROBE S/N** 15129 **Count time** 30 SEC

Meter Type Ludlum 2360 **PROBE** Ludlum 43-93

METER S/N 220246 ~~276943~~ DA **PROBE S/N** ~~197430~~ 199826 DA **Count time** 30 SEC

NEW BACKGROUND 3 88 85 (11/6/13

EU	Boring ID	Depth (ft)	44-10 Counts	44-9 Counts	43-93 alpha	43-93 both	43-93 beta	Notes
Background			4761	25	1	64	63	—
6	828-1	Surface	4057					
		0-0.5		25	2	85	83	SEE
		0.5-2.0		29	0	~~610~~ DA	~~610~~ DA	BELOW
		2.0-3.0		31	1	~~343~~ DA	~~342~~ DA	↓
6	829.2	Surface	4874					
		0-0.5		29	1	120 ~~202~~ DA	119 ~~202~~ DA	
		0.5-2.0		39	3	115	112	
		2.0-3.0		28	0	132	132	
6	829.1	Surface	6367					
		0-0.5		30	1	126	125	
		0.5-2.0		24	1	117	116	
		2.0-3.0		25	3	120	117	
6	829-4	Surface	4420					
		0-0.5		36	0	124	124	
		0.5-2.0		42	~~0~~ 1	~~95~~ 137	~~135~~ 136	
		2.0-3.0		45	1	176	175	
6	606.2	Surface	4285					
		0-0.5		38	1	119	118	
		0.5-2.0		28	5	150	145	
		2.0-3.0		33	1	132	131	
6	606-1	Surface	4834					
		0-0.5		29	1	139	138	
		0.5-2.0		29	3	139	136	
		2.0-3.0		30	3	140	137	
6	606.4	Surface	4565 ~~4715~~ DA					
		0-0.5		40	3	158	155	
		0.5-2.0		40	0	138	138	
		2.0-3.0		33	1	129	128	

2360 FAILED WILL BE COUNTED ON NEW METER

Recan 10/7/13

828-1	0-0.5	1	104	103
	0.5-2.0	2	112	110
	2.0-3.0	0	112	112

NFSS Soil Sample Scan 3ft

Date	110614 PA 13	Technicia	[redacted]
Meter Type	Ludlum 2221	PROBE	Ludlum 44-10
METER S/N		PROBE S/N	Count time
Meter Type		PROBE	Ludlum 44-9
METER S/N		PROBE S/N	Count time
Meter Type	Ludlum 2360	PROBE	Ludlum 43-93
METER S/N		PROBE S/N	Count time

EU	Boring ID	Depth (ft)	44-10 Counts	44-9 Counts	43-93 alpha	43-93 both	43-93 beta	Notes
Background								
6	EU061-3	Surface	4345					
		0-0.5		25	0	142	142	
		0.5-2.0		29	2	149	147	
		2.0-3.0		35	1	154	153	
6	EU061-4	Surface	4257					
		0-0.5		45	0	148	148	
		0.5-2.0		34	2	163	161	
		2.0-3.0		25	1	156	155	
6	EU061-1	Surface	3986					
		0-0.5		34	0	166	166	
		0.5-2.0		33	2	143	141	
		2.0-3.0		35	4	169	165	
6	EU061-2	Surface	4076					
		0-0.5		27	3	156	153	
		0.5-2.0		24	2	159	157	
		2.0-3.0	7935	27	0	170	170	
6	6B005-2	Surface	~~9706~~					INCORRECT LOC.
		0-0.5		25	9	195	186	
		0.5-2.0		29	1	187	186	
		2.0-3.0		26	2	152	150	
6	6B005-3	Surface	7897					
		0-0.5		33	2	200	198	
		0.5-2.0		31	2	197	195	
		2.0-3.0		25	2	166	164	
6	6B005-1	Surface	7135					
		0-0.5		40	6	223	217	
		0.5-2.0		66	6	723	717	SLAG MATERIAL
		2.0-3.0		34	6	185	179	

SEE PAGE 1

NFSS Soil Sample Scan 3ft

Date 110613 **Technicia** [redacted]

Meter Type Ludlum 2221 **PROBE** Ludlum 44-10

METER S/N 148443 **PROBE S/N** 150422 **Count tim** 30 seconds

Meter Type Model 12 **PROBE** Ludlum 44-9

METER S/N 102868 **PROBE S/N** 15129 **Count tim** 30 seconds

Meter Type Ludlum 2360 **PROBE** Ludlum 43-93

METER S/N 276943 **PROBE S/N** 197430 **Count tim** 30 seconds

EU	Boring ID	Depth (ft)	44-10 Counts	44-9 Counts	43-93 alpha	43-93 both	43-93 beta	Notes
Background								
6	6B005-04	Surface	4021					
		0-0.5		25	5	150	145	
		0.5-2.0		27	0	167	167	
		2.0-3.0		33	5	161	156	
6	PA ~~6~~ GWS-20	Surface	4679					
		0-0.5		30	1	169	168	
		0.5-2.0		32	3	161	158	
		2.0-3.0		24	1	118	117	
		Surface						
		0-0.5						
		0.5-2.0						
		2.0-3.0						
		Surface						
		0-0.5						
		0.5-2.0						
		2.0-3.0						
		Surface						
		0-0.5						
		0.5-2.0						
		2.0-3.0						
		Surface						
		0-0.5						
		0.5-2.0						
		2.0-3.0						
		Surface						
		0-0.5						
		0.5-2.0						
		2.0-3.0						

SEE PAGE 1

NFSS Soil Sample Scan 5ft

Date	110713	Technician	[redacted]		
Meter Type	Ludlum 2221	PROBE	Ludlum 44-10		
METER S/N	148443	PROBE S/N	150422	Count time	30 SEC
Meter Type	M12	PROBE	Ludlum 44-9		
METER S/N	102868	PROBE S/N	015129	Count time	30 SEC
Meter Type	Ludlum 2360	PROBE	Ludlum 43-93		
METER S/N	~~BU~~ 220246	PROBE S/N	199826	Count time	30 SEC

Eu	Boring ID	Depth (ft)	44-10 Counts	44-9 Counts	43-93 alpha	43-93 both	43-93 beta	Notes
Background			3644	17	0	86	86	
6	GW19	Surface	157321					
		0-0.5		42	7	209	202	
		0.5-2.0		88	33	382	349	
		2.0-3.0		64	23	430	407	
		3.0-4.0		40	11	244	233	
		4.0-5.0		35	4	190	186	
6	GW18	Surface	6028					
		0-0.5		29	0	148	148	
		0.5-2.0		26	1	192	191	
		2.0-3.0		25	0	186	186	
		3.0-4.0						
		4.0-5.0						
6	6A001-3	Surface	3583					
		0-0.5		30	4	123	119	
		0.5-2.0		31	1	141	140	
		2.0-3.0		34	1	166	165	
		3.0-4.0						
		4.0-5.0						
6	6A001-4	Surface	4400					
		0-0.5		30	01	~~109~~ 135	~~109~~ 134	
		0.5-2.0		24	1	146	145	
		2.0-3.0		14	0	162	162	
		3.0-4.0						
		4.0-5.0						
6	6A001-1	Surface	26203					
		0-0.5		68	5	461	456	
		0.5-2.0		30	4	327	323	
		2.0-3.0		34	1	120	119	
		3.0-4.0						
		4.0-5.0						

@GW19 SAMPLE COLLECTED AT SP6 NOT GW19 PIN FLAG
BIASED SAMPLE DUE TO GW5 / DISCUSSED [redacted]

NFSS Soil Sample Scan 5ft

Date	110713	**Technician**	[redacted]		
Meter Type	Ludlum 2221	**PROBE**	Ludlum 44-10		
METER S/N		**PROBE S/N**		**Count time**	
Meter Type		**PROBE**	Ludlum 44-9		
METER S/N		**PROBE S/N**		**Count time**	
Meter Type	Ludlum 2360	**PROBE**	Ludlum 43-93		
METER S/N		**PROBE S/N**		**Count time**	

Eu	Boring ID	Depth (ft)	44-10 Counts	44-9 Counts	43-93 alpha	43-93 both	43-93 beta	Notes
Background			3644	17	0	86	86	
6	6A001-~~1~~ 2 PA	Surface	4323					
		0-0.5		27	1	134	133	
		0.5-2.0		34	2	146	144	
		2.0-3.0		33	0	154	154	
		3.0-4.0						
		4.0-5.0						
6	GWS21	Surface	PA ~~6744~~ 6748					
		0-0.5		28	0	170	170	
		0.5-2.0		19	0	170	170	
		2.0-3.0		27	0	149	149	
		3.0-4.0						
		4.0-5.0						
6	GWS22	Surface	7257					
		0-0.5		PA ~~2~~ 28	0	144	144	
		0.5-2.0		PA ~~19~~ 33	1	125	124	
		2.0-3.0		PA ~~27~~ 28	PA ~~0~~ 1	PA ~~149~~ 140	PA ~~149~~ 139	
		3.0-4.0						
		4.0-5.0						
6	GWS23	Surface	5988					
		0-0.5		32	0	183	183	
		0.5-2.0		26	0	172	172	
		2.0-3.0		29	0	162	162	
		3.0-4.0						
		4.0-5.0						
6	GWS24	Surface	6790					
		0-0.5		41	0	147	147	
		0.5-2.0		38	2	128	126	
		2.0-3.0		30	0	121	121	
		3.0-4.0						
		4.0-5.0						

NFSS Soil Sample Scan 5ft

Date	110813	Technician	[redacted]		
Meter Type	Ludlum 2221	PROBE	Ludlum 44-10		
METER S/N	148443	PROBE S/N	150422	Count time	30 SEC
Meter Type	~~2360~~ M12	PROBE	Ludlum 44-9		
METER S/N	102868	PROBE S/N	015129	Count time	30SEC
Meter Type	Ludlum 2360	PROBE	Ludlum 43-93		
METER S/N	220246	PROBE S/N	199826	Count time	30 SEC
	276943		197430		30SEC

Eu	Boring ID	Depth (ft)	44-10 Counts	44-9 Counts	43-93 alpha	43-93 both	43-93 beta	Notes
Background			4312	19	0	91	91	
6	SP1	Surface	30161					*
		0-0.5		63	2	615	613	
		0.5-2.0		113	3	549	546	
		2.0-3.0		47	3	205	202	
		3.0-4.0		31	1	142	141	
		4.0-5.0				PA		
5	4G002-2	Surface	3530		1	82	81	
		0-0.5		26	~~1~~ PA	~~434~~ PA	~~433~~ PA	
		0.5-2.0		19	1	135	134	
		2.0-3.0		30	0	142	142	
		3.0-4.0				PA		
		4.0-5.0						
5	4G002-03	Surface	3572					
		0-0.5		10	0	80	80	
		0.5-2.0		29	1	91	90	
		2.0-3.0		15	0	105	105	
		3.0-4.0						
		4.0-5.0				PA		
5	4G002-04	Surface	3883	BKGD	2	80	78	2360
		0-0.5		29	1	103	102	S/N 276943
		0.5-2.0		29	1	88	87	
		2.0-3.0		23	1	75	74	
		3.0-4.0						
		4.0-5.0						
5	4G002-01	Surface	4225					
		0-0.5		28	0	73	73	
		0.5-2.0		28	1	91	90	
		2.0-3.0		36	0	70	70	
		3.0-4.0		~~18~~ PA		PA		
		4.0-5.0		PA				

* SP1 HIGHEST READING ON ROAD SURFACE. SAMPLE POINT IS 1' SOUTH OF ASPHALT READING FOR 30SEC CT IS 46815

+ SAMPLES SP1 4G002-2, 4G002-3, 4G002-1 SURVEYED USING 2360 S/N 220246.

NFSS Soil Sample Scan 5ft

Date	11·11·13	Technician	[redacted]	
Meter Type	Ludlum 2221	PROBE	Ludlum 44-10	
METER S/N	148443	PROBE S/N	150422	Count time 30SEC
Meter Type	M12	PROBE	Ludlum 44-9	
METER S/N	102868	PROBE S/N	015129	Count time 30SEC
Meter Type	Ludlum 2360	PROBE	Ludlum 43-93	
METER S/N	276943	PROBE S/N	197430	Count time 30SEC

Eu	Boring ID	Depth (ft)	44-10 Counts	44-9 Counts	43-93 alpha	43-93 both	43-93 beta	Notes
Background			4240	25	1	58	57	
11	MH06·9	Surface	4271					
		0-0.5		25	0	91	91	
		0.5-2.0		28	0	90	90	
		2.0-3.0		19	0	104	104	
		3.0-4.0				A		
		4.0-5.0				P		
11	MH·06·8	Surface	4396					
		0-0.5		30	0	96	96	
		0.5-2.0		44	0	103	103	
		2.0-3.0		26	0	94	94	
		3.0-4.0				A		
		4.0-5.0				P		
11	MH06·7	Surface	4652					
		0-0.5		33	0	101	101	
		0.5-2.0		28	1	94	93	
		2.0-3.0		26	1	84	83	
		3.0-4.0				A		
		4.0-5.0				P		
11	MH06·06	Surface	4813					~~OK~~ PA LITERAIN STARTING
		0-0.5		30	~~11~~ PA	117	116	
		0.5-2.0		28	0	85	85	
		2.0-3.0		30	1	102	101	
		3.0-4.0				A		
		4.0-5.0				P		
11	MH06·05	Surface	3974					
		0-0.5		38	1	89	88	
		0.5-2.0		22	0	101	101	
		2.0-3.0		32	1	103	103	
		3.0-4.0				A		
		4.0-5.0				P		

NFSS Soil Sample Scan 5ft

Date	11.11.13	Technician	[redacted]		
Meter Type	Ludlum 2221	PROBE	Ludlum 44-10		
METER S/N		PROBE S/N		Count time	30 SEC
Meter Type		PROBE	Ludlum 44-9		
METER S/N		PROBE S/N		Count time	30 SEC
Meter Type	Ludlum 2360	PROBE	Ludlum 43-93		
METER S/N		PROBE S/N		Count time	30 SEC

Eu	Boring ID	Depth (ft)	44-10 Counts	44-9 Counts	43-93 alpha	43-93 both	43-93 beta	Notes
Background			4240	25	1	58	57	
11	MH06-05 04 PA	Surface	4819					
		0-0.5		39	1	106	105	*
		0.5-2.0		33	2	104	102	
		2.0-3.0		34	0	107	107	
		3.0-4.0						
		4.0-5.0						
11	MH06-~~04~~ PA ~~02~~ PA 03 PA	Surface	~~5290~~ PA 3905					
		0-0.5		23	0	65	65	
		0.5-2.0		37	1	125	124	
		2.0-3.0		30	1	129	128	
		3.0-4.0		43	2	118	116	
		4.0-5.0		18	1	101	100	
11	MH06.02	Surface	5865					
		0-0.5		31	3	111	108	
		0.5-2.0		63	2	199	197	
		2.0-3.0		45	3	206	203	
		3.0-4.0		53	PA 5	204	199	
		4.0-5.0		37	1	145	144	
11	PA ~~5406~~ MH06.01	Surface	5290	BKGD 21	0	66	66	*MOVED INTO CONEX
		0-0.5		32	5	125	120	
		0.5-2.0		42	6	118	112	
		2.0-3.0		38	2	132	130	
		3.0-4.0						
		4.0-5.0						
11	MH06 01 ~~07~~ PA RECOUNT	Surface	—					
		0-0.5		33	5	124	119	
		0.5-2.0		41	7	119	112	
		2.0-3.0		37	1	120	119	
		3.0-4.0						
		4.0-5.0						

* DRILL RIG BEGAN SINKING IN @ MH06-05. AREAS SURVEYED 2221/44-10. ALL READINGS <11,500

NFSS Soil Sample Scan 5ft

Date	11.11.13	**Technician**	[redacted]
Meter Type	Ludlum 2221	**PROBE**	Ludlum 44-10
METER S/N		**PROBE S/N**	**Count time**
Meter Type		**PROBE**	Ludlum 44-9
METER S/N		**PROBE S/N**	**Count time**
Meter Type	Ludlum 2360	**PROBE**	Ludlum 43-93
METER S/N		**PROBE S/N**	**Count time**

Eu	Boring ID	Depth (ft)	44-10 Counts	44-9 Counts	43-93 alpha	43-93 both	43-93 beta	Notes
Background								
11	MH06-10	Surface	5197					
		0-0.5		33	0	139	139	
		0.5-2.0		37	1	162	161	
		2.0-3.0		49	1	221	220	
		3.0-4.0		39	1	167	166	
		4.0-5.0		40	2	136	134	
11	MH06-11	Surface	4127					
		0-0.5		16	0	63	63	
		0.5-2.0		21	1	62	61	
		2.0-3.0		31	0	100	100	
		3.0-4.0		43	1	124	123	
		4.0-5.0		32	1	108	107	
		Surface						
		0-0.5						
		0.5-2.0						
		2.0-3.0						
		3.0-4.0						
		4.0-5.0						
		Surface						
		0-0.5						
		0.5-2.0						
		2.0-3.0						
		3.0-4.0						
		4.0-5.0						
		Surface						
		0-0.5						
		0.5-2.0						
		2.0-3.0						
		3.0-4.0						
		4.0-5.0						

[redacted]

NFSS Soil Sample Scan 5ft

Date	11/12/13	Technician	[redacted]		
Meter Type	Ludlum 2221	PROBE	Ludlum 44-10		
METER S/N	148443	PROBE S/N	150422	Count time	30 SEC
Meter Type	M12	PROBE	Ludlum 44-9		
METER S/N	102868	PROBE S/N	015129	Count time	30 SEC
Meter Type	Ludlum 2360	PROBE	Ludlum 43-93		
METER S/N	276943	PROBE S/N	197430	Count time	30 SEC

Eu	Boring ID	Depth (ft)	44-10 Counts	44-9 Counts	43-93 alpha	43-93 both	43-93 beta	Notes
Background			4531	30	0	50	50	
11	MH06-12	Surface	4588					
		0-0.5		21	0	90	90	
		0.5-2.0		38	1	106	105	
		2.0-3.0		33	0	103	103	
		3.0-4.0				A		
		4.0-5.0				P		
11	MH06-13	Surface	4708					
		0-0.5		34	0	105	105	
		0.5-2.0		26	0	117	117	
		2.0-3.0		41	1	116	116	
		3.0-4.0				A		
		4.0-5.0				P		
11	MH06-14	Surface	3823					
		0-0.5		24	2	73	71	
		0.5-2.0		27	1	81	80	
		2.0-3.0		25	0	104	104	
		3.0-4.0				A		
		4.0-5.0				P		
11	MH06-15	Surface	4935					
		0-0.5		32	0	63	65	
		0.5-2.0		22	0	92	92	
		2.0-3.0		25	0	90	90	
		3.0-4.0				A		
		4.0-5.0				P		
11	MH06-16	Surface	5091					
		0-0.5		34	2	83	81	
		0.5-2.0		28	1	103	102	
		2.0-3.0		33	0	86	86	
		3.0-4.0				A		
		4.0-5.0				P		

NFSS Soil Sample Scan 5ft

Date	11/12/13	**Technician**	[redacted]	
Meter Type	Ludlum 2221	**PROBE**	Ludlum 44-10	
METER S/N	148443	**PROBE S/N**	150422	**Count time** 30 SEC
Meter Type	M12	**PROBE**	Ludlum 44-9	
METER S/N	102868	**PROBE S/N**	015129	**Count time** 30 SEC
Meter Type	Ludlum 2360	**PROBE**	Ludlum 43-93	
METER S/N	269413	**PROBE S/N**	197430	**Count time** 30 SEC

Eu	Boring ID	Depth (ft)	44-10 Counts	44-9 Counts	43-93 alpha	43-93 both	43-93 beta	Notes
Background			4531	30	0	50	50	
11	MH06-17	Surface	4957					
		0-0.5		27	0	72	72	
		0.5-2.0		22	1	92	91	
		2.0-3.0		26	0	75	75	
		3.0-4.0				A		
		4.0-5.0				P		
11	MH06-~~27~~ 24 DA	Surface	4627					
		0-0.5		19	1	72	71	
		0.5-2.0		27	0	84	84	
		2.0-3.0		30	0	91	91	
		3.0-4.0				A		
		4.0-5.0				P		
11	MH06-23	Surface	4759					
		0-0.5		25	0	66	66	
		0.5-2.0		38	1	90	91	
		2.0-3.0		29	0	85	85	
		3.0-4.0				A		
		4.0-5.0				P		
11	MH06-22	Surface	4995					
		0-0.5		32	0	75	75	
		0.5-2.0		32	0	86	86	
		2.0-3.0		24	0	84	84	
		3.0-4.0				A		
		4.0-5.0			P			
11	MH06-21	Surface	5052					
		0-0.5		32	0	73	73	
		0.5-2.0		34	0	93	93	
		2.0-3.0		35	0	93	93	
		3.0-4.0						
		4.0-5.0						

NFSS Soil Sample Scan 5ft

Date	11/12/13	Technician	[redacted]	
Meter Type	Ludlum 2221	PROBE	Ludlum 44-10	
METER S/N	148443	PROBE S/N	150422	Count time 30 SEC
Meter Type	M12	PROBE	Ludlum 44-9	
METER S/N	102868	PROBE S/N	015129	Count time 30 SEC
Meter Type	Ludlum 2360	PROBE	Ludlum 43-93	
METER S/N	276943	PROBE S/N	197430	Count time 30 SEC

Eu	Boring ID	Depth (ft)	44-10 Counts	44-9 Counts	43-93 alpha	43-93 both	43-93 beta	Notes
Background			4531	30	0	50	50	
11	MH06-20	Surface	4722					
		0-0.5		24	1	71	70	
		0.5-2.0		23	0	81	81	
		2.0-3.0		20	0	86	86	
		3.0-4.0				A		
		4.0-5.0				P		
11	MH06-19	Surface	2945					
		0-0.5		24	0	38	38	
		0.5-2.0		18	0	68	68	
		2.0-3.0		37	0	98	98	
		3.0-4.0				A		
		4.0-5.0	PA			P		
11	MH06-18	Surface	~~4~~ 4849					
		0-0.5		30	0	89	89	
		0.5-2.0		35	0	86	86	
		2.0-3.0		31	0	92	92	
		3.0-4.0				A		
		4.0-5.0				P		
11	MH06-25	Surface	4644					
		0-0.5		22	0	86	86	
		0.5-2.0		22	1	88	87	
		2.0-3.0		30	0	78	78	
		3.0-4.0				A		
		4.0-5.0				P		
11	MH06-26	Surface	3142					
		0-0.5		25	0	56	56	
		0.5-2.0		35	2	105	105	
		2.0-3.0		30	1	130	129	
		3.0-4.0		48	0	122	122	
		4.0-5.0		24	0	71	71	*

* REFUSAL @ 4'. MINIMAL RECOVERY. 4-5' INTERVAL NOT SAMPLED DUE TO DECREASE COUNTS. PA

NFSS Soil Sample Scan 5ft

Date	11/12/13	Technician	[redacted]		
Meter Type	Ludlum 2221	PROBE	Ludlum 44-10		
METER S/N	148443	PROBE S/N	150422	Count time	30SEC
Meter Type	M12	PROBE	Ludlum 44-9		
METER S/N	102868	PROBE S/N	015129	Count time	30SEC
Meter Type	Ludlum 2360	PROBE	Ludlum 43-93		
METER S/N	276943	PROBE S/N	197430	Count time	30SEC

Eu	Boring ID	Depth (ft)	44-10 Counts	44-9 Counts	43-93 alpha	43-93 both	43-93 beta	Notes
Background			4537	30	0	50	50	
11	MH06-27	Surface	4925					
		0-0.5		29	0	79	79	
		0.5-2.0		31	0	88	88	
		2.0-3.0		30	1	93	92	
		3.0-4.0				PA		
		4.0-5.0						
11	MH06-28	Surface	~~4560~~ PA 4314					REFUSAL.
		0-0.5		23	0	57	57	RELOCATED 2' EAST
		0.5-2.0		21	1	99	98	
		2.0-3.0		30	0	91	91	
		3.0-4.0				A		
		4.0-5.0				P		
11	MH06-29	Surface	4857					
		0-0.5		28	0	76	76	
		0.5-2.0		36	0	118	118	
		2.0-3.0		39	0	99	99	
		3.0-4.0				A		
		4.0-5.0				P		
11	MH06-~~24~~ PA 30	Surface	4000					
		0-0.5		20	0	75	75	
		0.5-2.0		45	0	125	125	
		2.0-3.0		33	1	115	114	
		3.0-4.0		30	0	90	90	
		4.0-5.0						
		Surface						
		0-0.5			A			
		0.5-2.0						
		2.0-3.0		P				
		3.0-4.0						
		4.0-5.0						

NFSS Soil Sample Scan 5ft

Date	11/13/13	**Technician**	[redacted]	
Meter Type	Ludlum 2221	**PROBE**	Ludlum 44-10	
METER S/N	148443	**PROBE S/N**	150422	**Count time** 30 seconds
Meter Type	Model 12	**PROBE**	Ludlum 44-9	
METER S/N	102868	**PROBE S/N**	15129	**Count time** 30 seconds
Meter Type	Ludlum 2360	**PROBE**	Ludlum 43-93	
METER S/N	2769413	**PROBE S/N**	197430	**Count time** 30 seconds

Eu	Boring ID	Depth (ft)	44-10 Counts	44-9 Counts	43-93 alpha	43-93 both	43-93 beta	Notes
Background			2397	14	0	50	50	
11	MH06-31	Surface	4026					
		0-0.5		25	0	65	65	
		0.5-2.0		31	0	93	93	
		2.0-3.0		28	0	89	89	
		3.0-4.0				A		
		4.0-5.0			P			
11	MH06-35	Surface	4730					
		0-0.5		20	0	61	61	
		0.5-2.0		22	0	70	70	
		2.0-3.0		31	0	82	82	
		3.0-4.0				A		
		4.0-5.0				P		
11	MH06-34	Surface	4923					
		0-0.5		22	1	74	73	
		0.5-2.0		27	0	86	86	
		2.0-3.0		32	1	91	91	
		3.0-4.0				A		
		4.0-5.0			P			
11	MH06-33	Surface	3646					
		0-0.5		19	1	79	78	
		0.5-2.0		24	0	101	101	
		2.0-3.0		26	0	84	84	
		3.0-4.0				A		
		4.0-5.0			P			
11	MH06-32	Surface	4275					
		0-0.5		24	0	74	74	
		0.5-2.0		30	0	97	97	
		2.0-3.0		25	0	91	91	
		3.0-4.0						
		4.0-5.0						

NFSS Soil Sample Scan 5ft

Date	11/13/13	**Technician**	[redacted]	
Meter Type	Ludlum 2221	**PROBE**	Ludlum 44-10	
METER S/N	148443	**PROBE S/N**	150422	**Count time** 30 seconds
Meter Type	Model 12	**PROBE**	Ludlum 44-9	
METER S/N	102868	**PROBE S/N**	15129	**Count time** 30 seconds
Meter Type	Ludlum 2360	**PROBE**	Ludlum 43-93	
METER S/N	276943	**PROBE S/N**	197430	**Count time** 30 seconds

Eu	Boring ID	Depth (ft)	44-10 Counts	44-9 Counts	43-93 alpha	43-93 both	43-93 beta	Notes
Background			2397	14	0	50	50	
11	2A006-04	Surface	~~5670~~ PA					
		0-0.5	5644	21	0	86	86	*
		0.5-2.0		27	0	82	82	RELOCATED
		2.0-3.0		24	0	86	86	DUE TO 0% RECOVERY
		3.0-4.0						
		4.0-5.0						
11	2A006-03	Surface	~~5812~~					RELOCATE
		0-0.5	5203	29	0	59	59	4' SOUTH DUE
		0.5-2.0		32	0	87	87	TO SLOPE
		2.0-3.0		34	0	86	86	
		3.0-4.0						
		4.0-5.0						
11	2A006-01	Surface	~~4662~~					REFUSAL @ 2'
		0-0.5	4058	25	0	58	58	MOVE 4' EAST OF
		0.5-2.0		20	0	81	81	ORIGINAL SPOT
		2.0-3.0		18	0	81	81	
		3.0-4.0						
		4.0-5.0						
11	2A006-02	Surface	6334					
		0-0.5		28	0	75	75	*
		0.5-2.0		20	1	72	71	
		2.0-3.0		33	0	66	66	
		~~3.0-4.0~~	RECOUNT 2	26				
		~~4.0-5.0~~						
11	SP9	Surface	10640					REFUSAL @ 2'
		0-0.5		33	0	69	69	NOT MOVING
		~~0.5-2.0~~	1.0	41	2	147	145	**
		PA ~~2.0-3.0~~	1.0-1.5	48	0	110	110	
		PA ~~3.0-4.0~~	1.5-2.0	24	0	107	107	
		~~4.0-5.0~~						

* POINTS 2A006-02 AND -04 OFFSET 5' WEST OF ORIGINAL POINTS DUE TO SLOPE OF DITCH

** HIGHEST BORE HOLE READING AT ~1' BELOW SURFACE 46K CPM

NFSS Soil Sample Scan 5ft

Date	11/13/13	Technician	[redacted]	
Meter Type	Ludlum 2221	PROBE	Ludlum 44-10	
METER S/N	148443	PROBE S/N	150422	Count time 30 seconds
Meter Type	Model 12	PROBE	Ludlum 44-9	
METER S/N	102868	PROBE S/N	15129	Count time 30 seconds
Meter Type	Ludlum 2360	PROBE	Ludlum 43-93	
METER S/N	276943	PROBE S/N	197430	Count time 30 seconds

Eu	Boring ID	Depth (ft)	44-10 Counts	44-9 Counts	43-93 alpha	43-93 both	43-93 beta	Notes
Background			2397	14	0	50	50	
11	8A004-4	Surface	6763					
		0-0.5		PA 2732	1	86	85	
		0.5-2.0		25	1	93	92	
		2.0-3.0		30	1	89	88	
		3.0-4.0						
		4.0-5.0						
11	8A004-1	Surface	6957					
		0-0.5		27	1	79	78	
		0.5-2.0		44	0	85	85	
		2.0-3.0		20	0	93	93	
		3.0-4.0				A		
		4.0-5.0				P		
11	8A004-3	Surface	6894					
		0-0.5		32	0	67	67	
		0.5-2.0		33	PA ~~1~~ 0	92	92	
		2.0-3.0		36	0	98	98	
		3.0-4.0						
		4.0-5.0						
11	8A004-2	Surface	6671					
		0-0.5		22	0	83	83	
		0.5-2.0		26	0	96	96	
		2.0-3.0		25	0	95	95	
		3.0-4.0				A		
		4.0-5.0	PA			P		
11	TB810_031	Surface	~~4279~~ 4279					
		0-0.5		18	1	80	79	
		0.5-2.0		28	0	90	90	
		2.0-3.0		24	0	91	91	
		3.0-4.0						
		4.0-5.0						

NFSS Soil Sample Scan 5ft

Date	11/13/13	**Technician**	[redacted]	
Meter Type	Ludlum 2221	**PROBE**	Ludlum 44-10	
METER S/N	148443	**PROBE S/N**	150422	**Count time** 30 seconds
Meter Type	Model 12	**PROBE**	Ludlum 44-9	
METER S/N	102868	**PROBE S/N**	15129	**Count time** 30 seconds
Meter Type	Ludlum 2360	**PROBE**	Ludlum 43-93	
METER S/N	276943	**PROBE S/N**	197430	**Count time** 30 seconds

Eu	Boring ID	Depth (ft)	44-10 Counts	44-9 Counts	43-93 alpha	43-93 both	43-93 beta	Notes
Background			2397	14	0	50	50	
11	TB810_032	Surface	4996					
		0-0.5		~~8~~ 23	0	88	88	
		0.5-2.0		20	0	93	93	
		2.0-3.0		26	0	96	96	
		3.0-4.0				A		
		4.0-5.0				P		
11	TB810_033	Surface	4639					
		0-0.5		23	0	60	60	
		0.5-2.0		30	0	85	85	
		2.0-3.0		24	0	90	90	
		3.0-4.0				A		
		4.0-5.0				P		
11	TB810_034	Surface	4998					BORE HOLE
		0-0.5						NOT STARTED
		0.5-2.0				A		
		2.0-3.0			P			
		3.0-4.0						
		4.0-5.0						
		Surface						
		0-0.5						
		0.5-2.0						
		2.0-3.0						
		3.0-4.0						
		4.0-5.0			A			
		Surface		P				
		0-0.5						
		0.5-2.0						
		2.0-3.0						
		3.0-4.0						
		4.0-5.0						

Borehole Gamma Log

PROJECT NFSS

Borehole ID# SP 9 **Date** 11 13 13

Drilled Depth 2' **Liner Height**

Technician [redacted]

Meter Type 2221 PROBE 44.10

METER S/N 148443 PROBE S/N 150422

Measured depth to bottom (ft) 2'

Depth (ft)	Count (cpm)	Sam X	Notes	Depth (ft)	Count (cpm)	Sam X	Notes
0	9442		REFUSAL @				
6"	19668	X	2' ROAD				
12"	46167	X	BASE MAT.				
18"	17579	X	BIASED PT				
24"	11182	X					

NFSS Soil Sample Scan 5ft

Date	11/14/13	**Technician**	[redacted]		
Meter Type	Ludlum 2221	**PROBE**	Ludlum 44-10		
METER S/N	148443	**PROBE S/N**	150422	**Count time**	30 seconds
Meter Type	Model 12	**PROBE**	Ludlum 44-9		
METER S/N	102868	**PROBE S/N**	15129	**Count time**	30 seconds
Meter Type	Ludlum 2360	**PROBE**	Ludlum 43-93		
METER S/N	276943	**PROBE S/N**	197430	**Count time**	30 seconds

Eu	Boring ID	Depth (ft)	44-10 Counts	44-9 Counts	43-93 alpha	43-93 both	43-93 beta	Notes
Background			2421	16	1	53	52	
11	TB810-24	Surface	4324					
		0-0.5		29	0	86	86	
		0.5-2.0		33	0	88	88	
		2.0-3.0		31	0	90	90	
		3.0-4.0				A		
		4.0-5.0				P		
7	GWS-7	Surface	4555	~~28~~ 51	0	48	48	NEW LOCATION
		0-0.5	BKGD 2076	26	1	88	87	
		0.5-2.0		15	0	82	82	
		2.0-3.0		29	0	85	85	
		3.0-4.0						
		4.0-5.0						
7	TB802A-01-01	Surface	4123	14	1	53	52	NEW LOCATION
		0-0.5	BKGD 2972	30	1	123	122	
		0.5-2.0		32	0	123	123	
		2.0-3.0		24	1	130	129	
		3.0-4.0				A		
		4.0-5.0				P		
7	TB802A-01-02	Surface	4694					
		0-0.5		20	1	100	99	
		0.5-2.0		21	0	88	88	
		2.0-3.0		29	1	93	92	
		3.0-4.0				A		
		4.0-5.0				P		
7	TB802A-01-03	Surface	5114					
		0-0.5		20	2	~~112~~ 114	112	
		0.5-2.0		24	0	106	106	
		2.0-3.0		46	3	141	138	
		3.0-4.0		22	1	107	106	
		4.0-5.0				A P		

NFSS Soil Sample Scan 5ft

Date	11/14/13	Technician	[redacted]		
Meter Type	Ludlum 2221	PROBE	Ludlum 44-10		
METER S/N	148443	PROBE S/N	150422	Count time	30 seconds
Meter Type	Model 12	PROBE	Ludlum 44-9		
METER S/N	102868	PROBE S/N	15129	Count time	30 seconds
Meter Type	Ludlum 2360	PROBE	Ludlum 43-93		
METER S/N	276943	PROBE S/N	197430	Count time	30 seconds

Eu	Boring ID	Depth (ft)	44-10 Counts	44-9 Counts	43-93 alpha	43-93 both	43-93 beta	Notes
Background			2972	14	1	53	52	
7	TB802A-01 -04	Surface	4673					
		0-0.5		21	1	85	84	
		0.5-2.0		33	2	103	101	
		2.0-3.0		33	0	100	100	
		3.0-4.0						
		4.0-5.0						
7	TB802-01	Surface	4343					
		0-0.5		21	0	112	112	
		0.5-2.0		31	1	114	113	
		2.0-3.0		39	3	164	161	DECAYING WOOD
		3.0-4.0		36	2	176	174	MATERIAL IN LAYER
		4.0-5.0		41	1	99	98	STANDING WATER
7	TB802-02	Surface	4518					
		0-0.5		36	2	93	91	
		0.5-2.0		PA ~~19~~ 29	2	132	130	
		2.0-3.0		25	1	94	93	
		3.0-4.0				PA		
		4.0-5.0				PA		
7	TB802-03	Surface	4671					
		0-0.5		25	1	86	85	
		0.5-2.0		26	0	94	94	
		2.0-3.0		29	0	97	97	
		3.0-4.0						
		4.0-5.0						
7	TB802-04	Surface	~~4445~~ PA					REFUSAL @ 2'
		0-0.5	4180	33	0	83	83	MOVE 2' WEST
		0.5-2.0		32	0	90	90	
		2.0-3.0		28	0	91	91	
		3.0-4.0				PA		
		4.0-5.0						

NFSS Soil Sample Scan 5ft

Date	11/14/13	**Technician**	[redacted]		
Meter Type	Ludlum 2221	**PROBE**	Ludlum 44-10		
METER S/N	148443	**PROBE S/N**	150422	**Count time**	30 seconds
Meter Type	Model 12	**PROBE**	Ludlum 44-9		
METER S/N	102868	**PROBE S/N**	15129	**Count time**	30 seconds
Meter Type	Ludlum 2360	**PROBE**	Ludlum 43-93		
METER S/N	276943	**PROBE S/N**	197430	**Count time**	30 seconds

Eu	Boring ID	Depth (ft)	44-10 Counts	44-9 Counts	43-93 alpha	43-93 both	43-93 beta	Notes
Background			2972	14	1	53	52	
7	GW56	Surface	18985					
		0-0.5		48	3	191	188	
		0.5-2.0		32	0	105	105	
		2.0-3.0		23	0	87	87	
		3.0-4.0				PA		
		4.0-5.0						
7	8DC09.01	Surface	4500					
		0-0.5		27	1	76	75	
		0.5-2.0		31	0	85	85	
		2.0-3.0		33	2	103	101	
		3.0-4.0				PA		
		4.0-5.0						
7	8DC09.02	Surface	8148					
		0-0.5		22	0	90	90	
		0.5-2.0		40	1	120	121	
		2.0-3.0		35	1	105	104	
		3.0-4.0						
		4.0-5.0				PA		
7	8DC09.3	Surface	~~4958~~ 4555					REFUSAL @ 3'
		0-0.5		35	0	90	90	ELEVATED READINGS
		0.5-2.0		40	1	119	119	2-3' INTERVAL OFFSET 2' SOUTH
		2.0-3.0		48	1	130	129	450% RECOVERY, OFFSET 2' NORTH OF ORIGINAL
		3.0-4.0						
		4.0-5.0				PA		OFFSET 2' N ORIGINAL NOT SAMPLED
7	8DC09-3 2' OFFSET N	Surface	4889					
		0-0.5		23	2	104	102	
		0.5-2.0		36	0	130	130	
		2.0-3.0		42	0	132	132	
		3.0-4.0		53	0	218	218	
		4.0-5.0		28	0	119	119	

NFSS Soil Sample Scan 5ft

Date	11/14/13	**Technician**	[redacted]	
Meter Type	Ludlum 2221	**PROBE**	Ludlum 44-10	
METER S/N	148443	**PROBE S/N**	150422	**Count time** 30 seconds
Meter Type	Model 12	**PROBE**	Ludlum 44-9	
METER S/N	102868	**PROBE S/N**	15129	**Count time** 30 seconds
Meter Type	Ludlum 2360	**PROBE**	Ludlum 43-93	
METER S/N	276943	**PROBE S/N**	197430	**Count time** 30 seconds

Eu	Boring ID	Depth (ft)	44-10 Counts	44-9 Counts	43-93 alpha	43-93 both	43-93 beta	Notes
Background			2972	14	1	53	52	
7	80C09-4	Surface	5289					
		0-0.5		36	1	85	84	
		0.5-2.0		14	0	73	73	
		2.0-3.0		27	1	103	102	
		3.0-4.0						
		4.0-5.0						
		Surface						
		0-0.5						
		0.5-2.0						
		2.0-3.0						
		3.0-4.0						
		4.0-5.0						
		Surface						
		0-0.5						
		0.5-2.0						
		2.0-3.0						
		3.0-4.0						
		4.0-5.0						
		Surface						
		0-0.5						
		0.5-2.0						
		2.0-3.0						
		3.0-4.0						
		4.0-5.0						
		Surface						
		0-0.5						
		0.5-2.0						
		2.0-3.0						
		3.0-4.0						
		4.0-5.0						

NFSS Soil Sample Scan 5ft

Date	11/15/13	**Technician**	[redacted]
Meter Type	Ludlum 2221	**PROBE**	Ludlum 44-10
METER S/N	148443	**PROBE S/N**	150422	**Count time** 30 seconds
Meter Type	Model 12	**PROBE**	Ludlum 44-9
METER S/N	102868	**PROBE S/N**	15129	**Count time** 30 seconds
Meter Type	Ludlum 2360	**PROBE**	Ludlum 43-93
METER S/N	220246	**PROBE S/N**	199826	**Count time** 30 seconds

Eu	Boring ID	Depth (ft)	44-10 Counts	44-9 Counts	43-93 alpha	43-93 both	43-93 beta	Notes
Background			3938	17	0	88	88	
7	~~8D0106-1~~ PA 8D016-1	Surface	4229					
		0-0.5		35	0	154	~~158~~ 154	
		0.5-2.0		32	0	158	158	
		2.0-3.0		29	0	143	143	
		3.0-4.0				A		
		4.0-5.0						
7	~~8D0106-2~~ PA 8D016-2	Surface	5990					
		0-0.5		17	0	154	154	
		0.5-2.0		25	0	152	152	
		2.0-3.0		43	2	228	226	ORGANIC LAYER
		3.0-4.0		30	1	136	135	
		4.0-5.0				A		
7	~~8D0106-3~~ PA 8D016-3	Surface	5175					
		0-0.5		30	0	135	135	
		0.5-2.0		27	0	163	163	ORGANIC MATERIAL THROUGHOUT
		2.0-3.0		50	1	293	292	
		3.0-4.0		69	4	435	435	
		4.0-5.0		45	0	144	144	
7	~~8D0106-4~~ PA 8D016-4	Surface	7423					
		0-0.5		23	0	155	155	
		0.5-2.0		43	0	187	187	
		2.0-3.0		56	1	258	257	ORGANIC MAT.
		3.0-4.0		41	2	232	230	
		4.0-5.0		32	1	203	202	SOME ORGANIC
7	8D006-1	Surface	6035					
		0-0.5						
		0.5-2.0						
		2.0-3.0		NO		CORED		
		3.0-4.0				PA		
		4.0-5.0						

NFSS Soil Sample Scan 5ft

Date	11/15/13	**Technician**	[redacted]		
Meter Type	Ludlum 2221	**PROBE**	Ludlum 44-10		
METER S/N	148443	**PROBE S/N**	150422	**Count time**	30 seconds
Meter Type	Model 12	**PROBE**	Ludlum 44-9		
METER S/N	102868	**PROBE S/N**	15129	**Count time**	30 seconds
Meter Type	Ludlum 2360	**PROBE**	Ludlum 43-93		
METER S/N	220246	**PROBE S/N**	199826	**Count time**	30 seconds

Eu	Boring ID	Depth (ft)	44-10 Counts	44-9 Counts	43-93 alpha	43-93 both	43-93 beta	Notes
Background			3938	17	0	88	88	
7	8D006-2	Surface	5346					
		0-0.5		15	0	131	131	
		0.5-2.0		36	0	150	150	
		2.0-3.0		26	1	170	169	
		3.0-4.0				A		
		4.0-5.0			P			
7	8D006-3	Surface	4504					
		0-0.5		25	1	112	111	
		0.5-2.0		37	0	147	147	
		2.0-3.0		28	1	169	168	
		3.0-4.0				A		
		4.0-5.0				P		
7	8D006-4	Surface	5198					
		0-0.5		26	1	137	136	
		0.5-2.0		17	1	150	149	
		2.0-3.0		38	1	156	155	
		3.0-4.0		21		A		
		4.0-5.0				P		
7	8D003-1	Surface	4894					
		0-0.5		17	1	113	112	
		0.5-2.0		30	1	132	131	
		2.0-3.0		28	0	150	150	
		3.0-4.0				A		
		4.0-5.0			P			
7	8D003-2	Surface	5665					
		0-0.5		20	0	133	133	
		0.5-2.0		26	0	134	132	
		2.0-3.0		25	0	145	145	
		3.0-4.0				A		
		4.0-5.0			P			

NFSS Soil Sample Scan 5ft

Date	11/15/13	**Technician**	[redacted]		
Meter Type	Ludlum 2221	**PROBE**	Ludlum 44-10		
METER S/N	148443	**PROBE S/N**	150422	**Count time**	30 seconds
Meter Type	Model 12	**PROBE**	Ludlum 44-9		
METER S/N	102868	**PROBE S/N**	15129	**Count time**	30 seconds
Meter Type	Ludlum 2360	**PROBE**	Ludlum 43-93		
METER S/N		**PROBE S/N**		**Count time**	30 seconds

Eu	Boring ID	Depth (ft)	44-10 Counts	44-9 Counts	43-93 alpha	43-93 both	43-93 beta	Notes
Background			3938	17	0	88	88	
7	~~8D003-3~~ PA 8D003-3	Surface	4927					
		0-0.5		30	0	135	135	
		0.5-2.0		191	0	143	143	
		2.0-3.0		18	1	139	138	
		3.0-4.0						
		4.0-5.0						
7	8D003-4	Surface	5605					
		0-0.5		29	2	131	129	
		0.5-2.0		37	0	159	159	
		2.0-3.0		39	2	154	154	
		3.0-4.0						
		4.0-5.0				PA		
		Surface						
		0-0.5						
		0.5-2.0						
		2.0-3.0						
		3.0-4.0						
		4.0-5.0						
		Surface						
		0-0.5		A				
		0.5-2.0		P				
		2.0-3.0						
		3.0-4.0						
		4.0-5.0						
		Surface						
		0-0.5						
		0.5-2.0						
		2.0-3.0						
		3.0-4.0						
		4.0-5.0						

NFSS Soil Sample Scan 5ft

Date	11/18/13	**Technician**	[redacted]		
Meter Type	Ludlum 2221	**PROBE**	Ludlum 44-10		
METER S/N	148443	**PROBE S/N**	150422	**Count time**	30 seconds
Meter Type	Model 12	**PROBE**	Ludlum 44-9		
METER S/N	102868	**PROBE S/N**	15129	**Count time**	30 seconds
Meter Type	Ludlum 2360	**PROBE**	Ludlum 43-93		
METER S/N	276943	**PROBE S/N**	197430	**Count time**	30 seconds

Eu	Boring ID	Depth (ft)	44-10 Counts	44-9 Counts	43-93 alpha	43-93 both	43-93 beta	Notes
Background			3810	26	0	60	60	~~SAMPLE~~ PA 15
7	8D004-1	Surface	5757					SAMPLE 15
		0-0.5		28	0	86	86	WET: NO
		0.5-2.0		33	0	85	85	STANDING WATER
		2.0-3.0		26	0	101	101	
		3.0-4.0						
		4.0-5.0				P A		
7	8D004-2	Surface	4280					
		0-0.5		33	1	100	99	
		0.5-2.0		29	0	113	113	
		2.0-3.0		21	0	79	79	
		3.0-4.0						
		4.0-5.0						
7	8D004-3	Surface	4774					
		0-0.5		34	1	99	98	
		0.5-2.0		36	0	108	108	
		2.0-3.0		28	0	122	122	
		3.0-4.0						
		4.0-5.0						
7	8D004-4	Surface	4935					
		0-0.5		30	0	87	87	
		0.5-2.0		28	0	85	85	
		2.0-3.0		28	0	88	88	
		3.0-4.0						
		4.0-5.0						
7	8E003-4	Surface	4603					
		0-0.5		30	1	109	108	
		0.5-2.0		33	0	96	96	
		2.0-3.0		20	1	102	101	
		3.0-4.0						
		4.0-5.0						

NFSS Soil Sample Scan 5ft

Date	11/18/13	**Technicia**	[redacted]
Meter Type	Ludlum 2221	**PROBE**	Ludlum 44-10
METER S/N	148443	**PROBE S/N**	150422
Count time	30 seconds		
Meter Type	Model 12	**PROBE**	Ludlum 44-9
METER S/N	102868	**PROBE S/N**	15129
Count time	30 seconds		
Meter Type	Ludlum 2360	**PROBE**	Ludlum 43-93
METER S/N	276943	**PROBE S/N**	197430
Count time	30 seconds		

Eu	Boring ID	Depth (ft)	44-10 Counts	44-9 Counts	43-93 alpha	43-93 both	43-93 beta	Notes
Background			3810	26	0	60	60	
7	8D007.1	Surface	4255					
		0-0.5		23	0	102	102	
		0.5-2.0		24	1	109	108	
		2.0-3.0		24	2	94	92	
		3.0-4.0						
		4.0-5.0						
7	8D007.2	Surface	4746					
		0-0.5		34	1	89	88	
		0.5-2.0		30	3	98	95	
		2.0-3.0		36	0	89	89	
		3.0-4.0						
		4.0-5.0						
7	8D007.3	Surface	8526					SPLIT SAMPLE
		0-0.5		30	2	98	96	FOR USACE
		0.5-2.0		28	0	100	100	RELOCATED
		2.0-3.0		30	2	96	94	BY ARI VIA
		3.0-4.0						GWS
		4.0-5.0						*
7	8D007.4	Surface	4924					
		0-0.5		24	0	106	106	
		0.5-2.0		41	0	110	110	
		2.0-3.0		25	2	88	86	
		3.0-4.0						
		~~4.0-5.0~~ BKGD	[illegible]	20	1	53	52	NEW LOCATION
10	~~2WP~~ PA TWP.937-1	Surface	4514	[illegible]				
		0-0.5		49	1	74	73	
		0.5-2.0		24	1	80	79	
		2.0-3.0		30	1	78	77	
		3.0-4.0						
		4.0-5.0						

* ELEVATED READINGS EXPECTED. NO ANOMOLIES DETECTED. BORE HOLE READING

0" 17301 6" 28700 12" 24090 18" 20920 24" 17200

NFSS Soil Sample Scan 5ft

Date	11/18/13	**Technician**	[redacted]		
Meter Type	Ludlum 2221	**PROBE**	Ludlum 44-10		
METER S/N	148443	**PROBE S/N**	150422	**Count time**	30 seconds
Meter Type	Model 12	**PROBE**	Ludlum 44-9		
METER S/N	102868	**PROBE S/N**	15129	**Count time**	30 seconds
Meter Type	Ludlum 2360	**PROBE**	Ludlum 43-93		
METER S/N	276943	**PROBE S/N**	197430	**Count time**	30 seconds

Eu	Boring ID	Depth (ft)	44-10 Counts	44-9 Counts	43-93 alpha	43-93 both	43-93 beta	Notes
Background			2716	20	1	53	52	
10	TWP937.2	Surface	5056					
		0-0.5		27	0	85	85	
		0.5-2.0		23	0	102	102	
		2.0-3.0		28	0	104	104	
		3.0-4.0				PA		
		4.0-5.0						
10	TWP937.3	Surface	5094					
		0-0.5		28	0	79	79	
		0.5-2.0		31	1	92	91	
		2.0-3.0		16	1	108	108	
		3.0-4.0				A		
		4.0-5.0			P			
10	TWP937.4	Surface	4962					
		0-0.5		14	0	109	109	
		0.5-2.0		27	1	96	95	
		2.0-3.0		34	1	87	86	
		3.0-4.0				PA		
		PA ~~4.0-5.0~~	~~[illegible]~~	26	~~PA~~ 1	~~PA~~ 62	61	NEW LOCATION
9	913-1	Surface	4943					
		0-0.5		31	0	102	102	
		0.5-2.0		32	0	93	93	
		2.0-3.0		22	2	114	112	
		3.0-4.0						
		4.0-5.0				PA		
9	913-2	Surface	4846					RELOCATED
		0-0.5		31	0	79	79	5' SOUTH
		0.5-2.0		26	0	107	107	ORIGINAL PT
		2.0-3.0		23	1	102	101	ON CULVERT
		3.0-4.0				PA		PIPE.
		4.0-5.0						

NFSS Soil Sample Scan 5ft

Date	11/18/13	Technician	[redacted]		
Meter Type	Ludlum 2221	PROBE	Ludlum 44-10		
METER S/N	148443	PROBE S/N	150422	Count time	30 seconds
Meter Type	Model 12	PROBE	Ludlum 44-9		
METER S/N	102868	PROBE S/N	15129	Count time	30 seconds
Meter Type	Ludlum 2360	PROBE	Ludlum 43-93		
METER S/N	276943	PROBE S/N	197430	Count time	30 seconds

Eu	Boring ID	Depth (ft)	44-10 Counts	44-9 Counts	43-93 alpha	43-93 both	43-93 beta	Notes
Background			3270	26	1	62	61	
9	913-3	Surface	4307					
		0-0.5		28	1	82	81	VERTICAL SAND
		0.5-2.0		28	0	91	91	LENSE IN 0.5'-3'
		2.0-3.0		27	1	73	72	INTERVALS
		3.0-4.0						
		~~4.0-5.0~~		21	0	44	44	NEW LOCATION
7	80006-1	Surface						
		0-0.5		29	1	82	81	
		0.5-2.0		25	1	104	103	
		2.0-3.0		15	0	108	108	
		3.0-4.0						
		4.0-5.0						
		Surface						
		0-0.5						
		0.5-2.0						
		2.0-3.0						
		3.0-4.0						
		4.0-5.0						
		Surface						
		0-0.5						
		0.5-2.0						
		2.0-3.0						
		3.0-4.0						
		4.0-5.0						
		Surface						
		0-0.5						
		0.5-2.0						
		2.0-3.0						
		3.0-4.0						
		4.0-5.0						

NFSS Soil Sample Scan 5ft

Date	11/19/13	Technici	[redacted]		
Meter Type	Ludlum 2221	PROBE	Ludlum 44-10		
ETER S/N	148443	PROBE S/N	150422	Count time	30 seconds
Meter Type	Model 12	PROBE	Ludlum 44-9		
METER S/N	102868	PROBE S/N	15129	Count time	30 seconds
Meter Type	Ludlum 2360	PROBE	Ludlum 43-93		
METER S/N	276943	PROBE S/N	197430	Count time	30 seconds

Eu	Boring ID	Depth (ft)	44-10 Counts	44-9 Counts	43-93 alpha	43-93 both	43-93 beta	Notes
Background			4316	20	0	55	55	
7	8E003-1	Surface	4265					
		0-0.5		19	0	89	89	
		0.5-2.0		27	1	96	95	
		2.0-3.0		27	1	118	117	
		3.0-4.0				P A		
		4.0-5.0						
7	8E003-2	Surface	5320					
		0-0.5		24	0	110	110	
		0.5-2.0		30	1	97	96	SOME SLAG IN LAYER
		2.0-3.0		33	1	79	78	
		3.0-4.0						
		4.0-5.0				P A		
7	8E003-3	Surface	4233					
		0-0.5		29	0	98	98	
		0.5-2.0		36	0	92	92	
		2.0-3.0		29	0	98	98	
		3.0-4.0						
		4.0-5.0				P A		
7	GW54	Surface	5197					
		0-0.5		31	0	101	101	
		0.5-2.0		25	0	102	105	
		2.0-3.0		32	0	109	109	
		3.0-4.0				A		
		B 4.0-5.0	[illegible]	24	1	P 47	46	
2	8F003-1	Surface	2711					NEW LOCATION
		0-0.5		25	1	94	93	
		0.5-2.0		23	0	87	87	
		2.0-3.0		24	0	101	101	
		3.0-4.0						
		4.0-5.0						

NFSS Soil Sample Scan 5ft

Date	11/14/13	**Technician**	[redacted]	
Meter Type	Ludlum 2221	**PROBE**	Ludlum 44-10	
METER S/N	148443	**PROBE S/N**	150422	**Count time** 30 seconds
Meter Type	Model 12	**PROBE**	Ludlum 44-9	
METER S/N	102868	**PROBE S/N**	15129	**Count time** 30 seconds
Meter Type	Ludlum 2360	**PROBE**	Ludlum 43-93	
METER S/N	276943	**PROBE S/N**	197430	**Count time** 30 seconds

Eu	Boring ID	Depth (ft)	44-10 Counts	44-9 Counts	43-93 alpha	43-93 both	43-93 beta	Notes
Background			2741	24	1	PA ~~27~~ 47	PA ~~26~~ 46	
2	8F003-2	Surface	3575					
		0-0.5		21	0	70	70	
		0.5-2.0		22	0	78	78	
		2.0-3.0		33	0	118	118	
		3.0-4.0				A		
		4.0-5.0				P		
2	8F003-3	Surface	3777					
		0-0.5		23	0	89	89	
		0.5-2.0		23	0	90	90	
		2.0-3.0		28	PA ~~2~~ 1	100	99	
		3.0-4.0				A		
		4.0-5.0				P		
2	8F003-4	Surface	3483					
		0-0.5		16	0	71	71	
		0.5-2.0		26	0	124	124	
		2.0-3.0		27	0	106	106	
		3.0-4.0				A		
		4.0-5.0		15	0	66	66	NEW LOCATION
1	504-1	Surface	5143					
		0-0.5		29	0	87	87	
		0.5-2.0		28	0	90	90	
		2.0-3.0		~~23~~ 33 PA	0	86	86	
		3.0-4.0				A		
		4.0-5.0				P		
1	504-2	Surface	5243					
		0-0.5		24	0	102	102	
		0.5-2.0		27	0	104	104	
		2.0-3.0		21	0	90	90	
		3.0-4.0						
		4.0-5.0						

NFSS Soil Sample Scan 5ft

Date	111913	Technician	[redacted]	
Meter Type	Ludlum 2221	PROBE	Ludlum 44-10	
METER S/N	148443	PROBE S/N	150422	Count time 30 seconds
Meter Type	Model 12	PROBE	Ludlum 44-9	
METER S/N	102868	PROBE S/N	15129	Count time 30 seconds
Meter Type	Ludlum 2360	PROBE	Ludlum 43-93	
METER S/N	276943	PROBE S/N	197430	Count time 30 seconds

Eu	Boring ID	Depth (ft)	44-10 Counts	44-9 Counts	43-93 alpha	43-93 both	43-93 beta	Notes
Background			3814	15	0	66	66	
1	504-3	Surface	4746					
		0-0.5		28	0	90	90	
		0.5-2.0		24	0	87	87	
		2.0-3.0		20	0	79	79	
		3.0-4.0				A		
		4.0-5.0				P		
1	504-4	Surface	4647					
		0-0.5		24	1	92	91	
		0.5-2.0		31	1	117	116	
		2.0-3.0		26	0	94	94	
		3.0-4.0				A		
		4.0-5.0				P		
1	5A016-1	Surface	3202					
		0-0.5		26	0	95	95	
		0.5-2.0		25	0	107	107	
		2.0-3.0		31	0	118	118	
		3.0-4.0				A		
		4.0-5.0				P		
1	5A016-2	Surface	6273					
		0-0.5		20	1	102	101	
		0.5-2.0		24	0	109	109	
		2.0-3.0		20	0	101	101	
		3.0-4.0				A		
		4.0-5.0				P		
1	5A016-3	Surface	4005					
		0-0.5		28	0	119	119	
		0.5-2.0		27	0	118	118	
		2.0-3.0		33	0	120	120	
		3.0-4.0						
		4.0-5.0						

NFSS Soil Sample Scan 5ft

Date	111913	**Technician**	[redacted]		
Meter Type	Ludlum 2221	**PROBE**	Ludlum 44-10		
METER S/N	148443	**PROBE S/N**	150422	**Count time**	30 seconds
Meter Type	Model 12	**PROBE**	Ludlum 44-9		
METER S/N	102868	**PROBE S/N**	15129	**Count time**	30 seconds
Meter Type	Ludlum 2360	**PROBE**	Ludlum 43-93		
METER S/N	276943	**PROBE S/N**	197430	**Count time**	30 seconds

Eu	Boring ID	Depth (ft)	44-10 Counts	44-9 Counts	43-93 alpha	43-93 both	43-93 beta	Notes
Background			3814	15	0	66	66	
1	5A016-4	Surface	4014					
		0-0.5		23	0	103	103	
		0.5-2.0		26	0	102	102	
		2.0-3.0		22	0	94	94	
		3.0-4.0				A		
		4.0-5.0			P			
		Surface						
		0-0.5						
		0.5-2.0						
		2.0-3.0						
		3.0-4.0						
		4.0-5.0						
		Surface						
		0-0.5						
		0.5-2.0						
		2.0-3.0						
		3.0-4.0		P	A			
		4.0-5.0						
		Surface						
		0-0.5						
		0.5-2.0						
		2.0-3.0						
		3.0-4.0						
		4.0-5.0						
		Surface						
		0-0.5						
		0.5-2.0						
		2.0-3.0						
		3.0-4.0						
		4.0-5.0						

NFSS Soil Sample Scan 5ft

Date	11/20/13	**Technician**	[redacted]		
Meter Type	Ludlum 2221	**PROBE**	Ludlum 44-10		
METER S/N	148443	**PROBE S/N**	150422	**Count time**	30 seconds
Meter Type	Model 12	**PROBE**	Ludlum 44-9		
METER S/N	102868	**PROBE S/N**	15129	**Count time**	30 seconds
Meter Type	Ludlum 2360	**PROBE**	Ludlum 43-93		
METER S/N	220246	**PROBE S/N**	199826	**Count time**	30 seconds

Eu	Boring ID	Depth (ft)	44-10 Counts	44-9 Counts	43-93 alpha	43-93 both	43-93 beta	Notes
Background			3359	18	1	89	88	
1	503-1	Surface	4429					
		0-0.5		42	1	191	190	
		0.5-2.0		50	1	255	254	
		2.0-3.0		26	1	144	143	
		3.0-4.0				A		
		4.0-5.0				P		
1	SP13	Surface	52046					
		0-0.5		69	0	270	270	
		0.5-2.0		75	0	326	326	SPLIT SAMPLE USACE
		2.0-3.0		25	0	146	146	
		3.0-4.0				A		
		4.0-5.0				P		
1	503-2	Surface	4400					
		0-0.5		27	0	141	141	
		0.5-2.0		26	1	158	157	
		2.0-3.0		31	0	165	165	
		3.0-4.0						
		4.0-5.0						
1	503-3	Surface	4429					
		0-0.5		35	0	155	155	
		0.5-2.0		31	1	152	151	
		2.0-3.0		29	0	165	165	
		3.0-4.0				A		
		4.0-5.0				P		
1	503-4	Surface	3742					
		0-0.5		24	0	158	158	
		0.5-2.0		27	0	150	150	ORGANIC & ROCK LENSES
		2.0-3.0		35	0	134	134	
		3.0-4.0				A		
		4.0-5.0				P		

NFSS Soil Sample Scan 5ft

Date	11/20/13	**Technician**	[redacted]		
Meter Type	Ludlum 2221	**PROBE**	Ludlum 44-10		
METER S/N	148443	**PROBE S/N**	150422	**Count time**	30 seconds
Meter Type	Model 12	**PROBE**	Ludlum 44-9		
METER S/N	102868	**PROBE S/N**	15129	**Count time**	30 seconds
Meter Type	Ludlum 2360	**PROBE**	Ludlum 43-93		
METER S/N	220246	**PROBE S/N**	199826	**Count time**	30 seconds

Eu	Boring ID	Depth (ft)	44-10 Counts	44-9 Counts	43-93 alpha	43-93 both	43-93 beta	Notes
Background			3359	18	1	89	88	
1	5A021-1	Surface	5743					
		0-0.5		32	1	178	177	
		0.5-2.0		26	1	141	140	SLAG IN UPPER PORTION
		2.0-3.0		34	0	186	186	
		3.0-4.0				DN		
		4.0-5.0		4787				
1	5A021-2	Surface	~~5422~~					CLEARANCE
		0-0.5		22	0	130	130	OVERHEAD
		0.5-2.0		25	0	160	160	DELICATE
		2.0-3.0		26	1	150	149	NORTH
		3.0-4.0				A		4782 2x2
		4.0-5.0				P		ORGANIC IN 0.5-2.0
1	5A021-3	Surface	6342					
		0-0.5		~~PA34~~ 19	0	151	151	
		0.5-2.0		20	1	160	159	SPLIT SAMPLE
		2.0-3.0		34	0	200	200	
		3.0-4.0				A		
		4.0-5.0				P		
1	5A021-4	Surface	5469					
		0-0.5		21	1	124	123	
		0.5-2.0		24	0	156	156	
		2.0-3.0		28	1	173	172	
		3.0-4.0						
		4.0-5.0						
1	5A010-1	Surface	7009					
		0-0.5		27	0	163	163	
		0.5-2.0		34	0	170	170	SLAG PRESENT
		2.0-3.0		26	0	158	158	
		3.0-4.0						
		4.0-5.0						

[redacted]

NFSS Soil Sam[redacted]

Date	11/20/13	Technici[redacted]		
Meter Type	Ludlum 2221	PROBE	Ludlum 44-10	
METER S/N	148443	PROBE S/N	150422	Count time 30 seconds
Meter Type	Model 12	PROBE	Ludlum 44-9	
METER S/N	102868	PROBE S/N	15129	Count time 30 seconds
Meter Type	Ludlum 2360	PROBE	Ludlum 43-93	
METER S/N	220246	PROBE S/N	199826	Count time 30 seconds

Eu	Boring ID	Depth (ft)	44-10 Counts	44-9 Counts	43-93 alpha	43-93 both	43-93 beta	Notes
Background			3359	18	1	89	88	
1	5A010.2	Surface	8553					
		0-0.5		28	1	154	154	
		0.5-2.0		34	0	171	171	SLAG
		2.0-3.0		28	0	161	161	
		3.0-4.0						
		4.0-5.0				PA		
1	5A010-3	Surface	4613					
		0-0.5		29	0	169	169	
		0.5-2.0		29	0	170	170	
		2.0-3.0		21	0	160	160	
		3.0-4.0				PA		
		4.0-5.0		5075 31	1	90	89	
8	3A020.01	Surface	5609					NEW LOCATION
		0-0.5		31	1	141	140	
		0.5-2.0		PA ~~21~~ 31	1	156	155	
1 PA	~~5A010.4~~	2.0-3.0		36	0	172	172	
		3.0-4.0						
		4.0-5.0			PA			
		Surface						
		0-0.5						
		0.5-2.0						
		2.0-3.0						
		3.0-4.0						
		4.0-5.0						
		Surface						
		0-0.5						
		0.5-2.0						
		2.0-3.0						
		3.0-4.0						
		4.0-5.0						

NFSS Soil Sample [redacted]

Date	112113	**Technician**	[redacted]		
Meter Type	Ludlum ~~2221~~ 2350 P/A	**PROBE**	Ludlum 44-10		
METER S/N	~~148443~~ 186198	**PROBE S/N**	~~150422~~ P/A 164157	**Count time**	30 seconds
Meter Type	Model 12	**PROBE**	Ludlum 44-9		
METER S/N	102868	**PROBE S/N**	15129	**Count time**	30 seconds
Meter Type	Ludlum 2360	**PROBE**	Ludlum 43-93		
METER S/N	220246	**PROBE S/N**	199826	**Count time**	30 seconds

Eu	Boring ID	Depth (ft)	44-10 Counts	44-9 Counts	43-93 alpha	43-93 both	43-93 beta	Notes
Background			5774	21	1	106	106	
8	3A017.1	Surface	5424					
		0-0.5		21	0	125	125	
		0.5-2.0		28	1	132	130	
		2.0-3.0		33	0	140	140	
		3.0-4.0				A		
		4.0-5.0				P		
8	3A017.2	Surface	6746					
		0-0.5		22	0	142	142	
		0.5-2.0		28	0	167	167	SLAG
		2.0-3.0		30	0	163	163	SLAG
		3.0-4.0				A		
		4.0-5.0				P		
8	3A017.3	Surface	~~6447~~ 9091					REFUSAL @ 2'
		0-0.5		31	0	170	170	3' EAST
		0.5-2.0		31	1	168	167	SLAG
		2.0-3.0		30	0	171	171	SLAG
		3.0-4.0				A		
		4.0-5.0				P		
8	3A017.4	Surface	~~5638~~ 5274					
		0-0.5		35	0	184	184	REFUSAL @ 2'
		0.5-2.0		31	1	171	170	3' WEST
		2.0-3.0		34	0	168	168	
		3.0-4.0				A		
		4.0-5.0				P		
8	~~8A~~ P/A 3A020-3	Surface	5228					
		0-0.5		25	1	140	139	
		0.5-2.0		29	0	168	168	
		2.0-3.0		30	0	190	190	
		3.0-4.0						
		4.0-5.0			~~0~~ P/A	P/A		

NFSS Soil Sample Scan 5ft

Date	112113	**Technician**	[redacted]	
Meter Type	Ludlum ~~2221~~ 2350	**PROBE**	Ludlum 44-10	
METER S/N	~~148443~~ 186198	**PROBE S/N**	~~150422~~ 164157	**Count time** 30 seconds
Meter Type	Model 12	**PROBE**	Ludlum 44-9	
METER S/N	102868	**PROBE S/N**	15129	**Count time** 30 seconds
Meter Type	Ludlum 2360	**PROBE**	Ludlum 43-93	
METER S/N	220246	**PROBE S/N**	199826	**Count time** 30 seconds

Eu	Boring ID	Depth (ft)	44-10 Counts	44-9 Counts	43-93 alpha	43-93 both	43-93 beta	Notes
Background			5774	21	1	106	106	
8	3A020-4	Surface	6488					
		0-0.5		23	2	164	162	
		0.5-2.0		34	0	176	176	SLAG
		2.0-3.0		26	0	158	158	SLAG
		3.0-4.0				A		
		4.0-5.0				P		
8	3A006-1	Surface	5885					
		0-0.5		20	0	154	154	
		0.5-2.0		27	0	170	170	
		2.0-3.0		23	1	141	140	
		3.0-4.0				A		
		4.0-5.0				P		
8	3A006-2	Surface	6622					
		0-0.5		25	1	162	161	
		0.5-2.0		37	0	205	205	
		2.0-3.0		32	0	177	177	SLAG/GRAVEL
		3.0-4.0						
		4.0-5.0				A		
8	3A006-3	Surface	6151					
		0-0.5		~~36~~ 36	0	196	196	
		0.5-2.0		32	0	180	180	
		2.0-3.0		24	0	165	165	
		3.0-4.0				A		
		4.0-5.0				P		
8	3A006-4	Surface	~~6057~~ 6059					
		0-0.5		26	0	167	167	
		0.5-2.0		29	0	175	175	
		2.0-3.0		25	0	165	165	
		3.0-4.0				A		
		4.0-5.0				P		

NFSS Soil Sample Scan 5ft

Date	112113	**Technician**	[redacted]		
Meter Type	Ludlum ~~2221~~ 2350	**PROBE**	Ludlum 44-10		
METER S/N	PA ~~148443~~ 186198	**PROBE S/N**	PA ~~150422~~ 164157	**Count time**	30 seconds
Meter Type	Model 12	**PROBE**	Ludlum 44-9		
METER S/N	102868	**PROBE S/N**	15129	**Count time**	30 seconds
Meter Type	Ludlum 2360	**PROBE**	Ludlum 43-93		
METER S/N	220246	**PROBE S/N**	199826	**Count time**	30 seconds

Eu	Boring ID	Depth (ft)	44-10 Counts	44-9 Counts	43-93 alpha	43-93 both	43-93 beta	Notes
Background			5774	22	1	106	106	
8	3A023-1	Surface	~~8608~~ PA					RELOCATE 5' E ROAD
		0-0.5		24	0	130	130	REFUSAL @ 2' ~~6145~~ PA
		0.5-2.0		31	0	187	187	RELOCATE 5' E
		2.0-3.0		30	0	PA ~~187~~ 178	178	5786 CTS
		3.0-4.0						
		4.0-5.0				PA		
8	3A023-2	Surface	~~5282~~ PA					RELOCATE 3' W
		0-0.5		33	1	185	185	OFF FOUNDATION
		0.5-2.0		25	0	156	156	5191 CTS
		2.0-3.0		30	0	180	180	
		3.0-4.0						
		4.0-5.0				PA		
8	3A023-3	Surface	4913					
		0-0.5		34	0	174	174	
		0.5-2.0		31	0	176	176	
		2.0-3.0		34	0	178	178	
		3.0-4.0				PA		
		4.0-5.0						
8	3A007-1 ~~8~~ PA	Surface	5828					
		0-0.5		27	1	167	166	
		0.5-2.0		23	1	151	150	
		2.0-3.0		27	1	156	155	
		3.0-4.0				PA		
		4.0-5.0						
8	3A007-2	Surface	5868					
		0-0.5		25	0	142	142	
		0.5-2.0		26	1	150	149	
		2.0-3.0		30	0	160	160	
		3.0-4.0						
		4.0-5.0				PA		

NFSS Soil Sample Scan 5ft

Date	112113	**Technician**	[redacted]		
Meter Type	Ludlum ~~2221~~ 2350 PA	**PROBE**	Ludlum 44-10		
METER S/N	DIA ~~148443~~ 186198	**PROBE S/N**	~~150422~~ 164157	**Count time**	30 seconds
Meter Type	Model 12	**PROBE**	Ludlum 44-9		
METER S/N	102868	**PROBE S/N**	15129	**Count time**	30 seconds
Meter Type	Ludlum 2360	**PROBE**	Ludlum 43-93		
METER S/N	220246	**PROBE S/N**	199826	**Count time**	30 seconds

Eu	Boring ID	Depth (ft)	44-10 Counts	44-9 Counts	43-93 alpha	43-93 both	43-93 beta	Notes
Background			5774	21	1	106	100	
8	3A007.8 PA 3	Surface	6245					
		0-0.5		35	~~0~~ 1	154	153	
		0.5-2.0		33	1	160	159	
		2.0-3.0		24	0	153		
		3.0-4.0						
		4.0-5.0				DIA		
8	3A005.4	Surface	3158					
		0-0.5		33	0	133	133	SLAG
		0.5-2.0		30	0	151	151	SLAG
		2.0-3.0		34	0	150	150	SLAG
		3.0-4.0						
		4.0-5.0						
		Surface						
		0-0.5						
		0.5-2.0						
		2.0-3.0						
		3.0-4.0						
		4.0-5.0						
		Surface						
		0-0.5						
		0.5-2.0						
		2.0-3.0						
		3.0-4.0						
		4.0-5.0						
		Surface						
		0-0.5						
		0.5-2.0						
		2.0-3.0						
		3.0-4.0						
		4.0-5.0						

DIA

NFSS Soil Sample Scan 5ft

Date	112213	Technician	[redacted]		
Meter Type	Ludlum ~~2221~~ PA 2350	PROBE	Ludlum 44-10		
METER S/N	~~PA148443~~ 186198	PROBE S/N	~~150422~~ PA 164157	Count time	30 seconds
Meter Type	Model 12	PROBE	Ludlum 44-9		
METER S/N	102868	PROBE S/N	15129	Count time	30 seconds
Meter Type	Ludlum 2360	PROBE	Ludlum 43-93		
METER S/N	220246	PROBE S/N	~~197430~~ PA 199826	Count time	30 seconds

Eu	Boring ID	Depth (ft)	44-10 Counts	44-9 Counts	43-93 alpha	43-93 both	43-93 beta	Notes
Background			2790	23	0	78	78	
8	3A005.1	Surface	6498					
		0-0.5		23	0	133	133	
		0.5-2.0		33	0	145	145	
		2.0-3.0		19	0	130	130	
		3.0-4.0				A		
		4.0-5.0				P		
8	3A005.2	Surface	5446					
		0-0.5		28	0	147	147	
		0.5-2.0		40	1	127	126	
		2.0-3.0		33	0	133	133	
		3.0-4.0				A		
		4.0-5.0				P		
8	3A005.3	Surface	7157					
		0-0.5		33	0	150	150	
		0.5-2.0		24	0	126	126	
		2.0-3.0		33	0	137	137	
		3.0-4.0				A		
		4.0-5.0				P		
8	3A002.1	Surface	7409					
		0-0.5		15	0	122	122	SLAG
		0.5-2.0		19	0	97	97	SLAG
		2.0-3.0		21	1	135	134	
		3.0-4.0				A		
		4.0-5.0				P		
8	3A002.2	Surface	5501					
		0-0.5		16	0	143	143	
		0.5-2.0		25	0	124	124	
		2.0-3.0		19	1	121	120	
		3.0-4.0				A		
		4.0-5.0				P		

NFSS Soil Sample Scan 5ft

Date	11/22/13	Techn[redacted]			
Meter Type	Ludlum ~~2221~~ 2350	PROBE	Ludlum 44-10		
METER S/N	~~PA 148443~~ PA 186198	PROBE S/N	~~450422~~ PA 164157	Count time	30 seconds
Meter Type	Model 12	PROBE	Ludlum 44-9		
METER S/N	102868	PROBE S/N	15129	Count time	30 seconds
Meter Type	Ludlum 2360	PROBE	Ludlum 43-93		
METER S/N	220246	PROBE S/N	~~197430~~ PA 199826	Count time	30 seconds

Eu	Boring ID	Depth (ft)	44-10 Counts	44-9 Counts	43-93 alpha	43-93 both	43-93 beta	Notes
Background			2790	23	0	78	78	—
8	3ACOZ-3	Surface	5389					
		0-0.5		17	1	140	139	
		0.5-2.0		21	0	126	126	
		2.0-3.0		26	PA ~~0~~ 1	145	144	
		3.0-4.0				A		
		4.0-5.0				P		
8	3ACOZ-4	Surface	5038					
		0-0.5		23	1	157	156	
		0.5-2.0		19	2	120	118	
		2.0-3.0		19	0	120	120	
		3.0-4.0						
		4.0-5.0	3559	25	0	67	67	NEW LOCATION
2	8F001-1	Surface	~~4960~~ PA					RAIN STARTED
		0-0.5	4260	PA ~~29~~ 29	1	229	128	MODERATE
		0.5-2.0		28	1	117	116	RELOCATE 18'
		2.0-3.0		30	1	124	123	SOUTH FENCE
		3.0-4.0				A		
		4.0-5.0				P		
2	8F001-2	Surface	4517					RELOCATED 6 PA
		0-0.5		21	0	139	139	7' WEST STAND
		0.5-2.0		26	1	151	150	WATER
		2.0-3.0		PA ~~32~~ 22	1	121	120	
		3.0-4.0				A		
		4.0-5.0				P		
2	8F001-3	Surface	4041					
		0-0.5		37	0	126	126	
		0.5-2.0		30	0	135	135	
		2.0-3.0		25	0	130	130	
		3.0-4.0				A		
		4.0-5.0				P		

NFSS Soil Sample Scan 5ft

Date	112213	**Technician**	[redacted]		
Meter Type	Ludlum ~~2221~~ 2350	**PROBE**	Ludlum 44-10		
METER S/N	~~148443~~ 186198	**PROBE S/N**	PA ~~150422~~ 164157	**Count time**	30 seconds
Meter Type	Model 12	**PROBE**	Ludlum 44-9		
METER S/N	102868	**PROBE S/N**	15129	**Count time**	30 seconds
Meter Type	Ludlum 2360	**PROBE**	Ludlum 43-93		
METER S/N	220246	**PROBE S/N**	199826	**Count time**	30 seconds

Eu	Boring ID	Depth (ft)	44-10 Counts	44-9 Counts	43-93 alpha	43-93 both	43-93 beta	Notes
Background								NEW LOCATION
		Surface						
		0-0.5						
		0.5-2.0						
		2.0-3.0						
		3.0-4.0						
		4.0-5.0						
		Surface						
		0-0.5						
		0.5-2.0						
		2.0-3.0						
		3.0-4.0						
		4.0-5.0						
		Surface						
		0-0.5						
		0.5-2.0						
		2.0-3.0						
		3.0-4.0						
		4.0-5.0						
		Surface						
		0-0.5						
		0.5-2.0						
		2.0-3.0						
		3.0-4.0						
		4.0-5.0						
		Surface						
		0-0.5						
		0.5-2.0						
		2.0-3.0						
		3.0-4.0						
		4.0-5.0						