US Army Corps of Engineers®
Buffalo District
BUILDING STRONG®

Site Safety and Health Plan
(Appendix A to the Accident Prevention Plan)
Final

Balance of Plant Operable Unit
Investigation to Refine the Extent of Soil Contamination
Niagara Falls Storage Site
Lewiston, New York
Formerly Utilized Sites Remedial Action Program (FUSRAP)
Contract No. W912QR-12-D-0023
Delivery Order No. DN02

U.S. Army Corps of Engineers
Buffalo District
Buffalo, New York

Prepared by:
URS Group, Inc.

October 2013

Table of Contents

Section **Page**

Acronyms v
1.0 Introduction 1-1
1.1 Project Information and Description 1-1
1.2 Key Individuals Responsible for Safety 1-1
1.3 Dates of Site Work 1-1
1.4 Site Access 1-1
1.5 Prevailing Weather 1-1
1.6 Site Description and History 1-2
1.7 Specific Tasks to be Performed 1-2
1.8 Listing of Phases of Work and Activity Hazard Analyses 1-2
1.9 Revision of the SSHP 1-3
2.0 Tasks Addressed Under This Plan 2-1
2.1 Description of Major Tasks 2-1
2.2 Employee Orientation 2-1
2.3 Employee Training 2-1
2.4 HAZWOPER-Related Tasks 2-2
3.0 Hazard Controls 3-1
3.1 Project-Specific Hazards 3-1
3.1.1 General Worker Protection Requirements 3-1
3.1.2 Survey Lasers 3-2
3.1.3 Energized Electrical 3-2
3.1.4 Drilling 3-3
3.1.5 Lockout/Tagout 3-4
3.1.6 Excavation 3-5
3.1.7 Welding and Cutting 3-5
3.1.8 Compressed Gas Cylinders 3-6
3.1.9 Fall Protection 3-6
3.1.10 Hand Tools 3-6
3.2 General Hazards 3-7
3.2.1 Housekeeping 3-8
3.3 Hazard Communication 3-8
3.4 Shipping and Transportation of Chemical Products 3-9
3.5 Lifting 3-9

3.6 Fire Prevention 3-10
3.7 Ladders 3-10
3.8 Heat Stress 3-12
3.9 Cold Stress 3-13
3.10 Procedures for Locating Buried Utilities 3-14
3.11 Confined Space Entry 3-14
3.12 Vehicle Safety-Operator Safety 3-15
3.13 Working/Walking Adjacent to Vehicle Traffic 3-16
3.14 Vehicles Entering/Exiting Site 3-16
3.15 Uneven Walking/Working Surfaces 3-17
3.16 Slips, Trips, and Falls 3-17
3.17 Pressure Washer/Steam Cleaner Operations 3-17
3.18 Vacuum Truck Operations 3-18
3.19 Inclement Weather 3-18
3.20 Radiological and Chemical Hazards 3-19
3.20.1 Radiological 3-19
3.20.2 Chemical 3-19
3.21 Biological Hazards and Controls 3-20
3.22 Contaminants of Concern 3-22
3.23 Potential Routes of Exposure 3-22
4.0 Proactive Health and Safety Program 4-1
4.1 AHA and Hazardous Work Permits 4-1
4.2 Daily Pre-Task Safety Meeting 4-2
4.3 Incident Investigations 4-2
5.0 Project Organization and Personnel 5-1
5.1 URS Project Personnel 5-1
5.2 Field Team Chain-of-Command and Communication Procedures 5-2
6.0 Personal Protective Equipment (PPE) 6-1
7.0 Health and Safety Monitoring 7-1
7.1 Chlorinated Volatile Organic Compounds 7-1
7.1.1 Direct-Reading Instruments 7-1
7.1.2 Frequency of Monitoring 7-1
7.1.3 Action Levels 7-1
7.1.4 Recording of Air Monitoring Results 7-2
7.1.5 Levels of Protection 7-3
7.2 Radiological Monitoring 7-3
8.0 Decontamination 8-1
8.1 Decontamination Specifications 8-1

8.2 Diagram of Personnel Decontamination Line 8-2
8.3 Spill Containment and Reporting Procedures 8-2
9.0 Site Control Plan 9-1
9.1 Site Control Procedures 9-1
9.2 HAZWOPER Compliance 9-1
10.0 Emergency Plan 10-1
10.1 Pre-Emergency Planning 10-1
10.2 Site Communications 10-1
10.3 Emergency Equipment and Supplies 10-2
10.4 Incident Response 10-2
10.5 Emergency Medical Treatment 10-2
10.6 Evacuation 10-3
10.7 Evacuation Signals 10-4
10.8 Incident Notification and Reporting 10-4
10.9 Lines of Authority 10-4
11.0 Security Plan 11-1
11.1 Security Components and Required Actions 11-1
11.2 Entrance and Traffic-Control Procedures 11-1
12.0 Medical Monitoring 12-1
13.0 Employee Sign-Off Form 13-1

Attachment A - Safety Management Standards

SMS 002	Hazard Communication
SMS 003	Emergency Preparedness Plans
SMS 010	Confined Space Entry
SMS 012	Electrical Safety
SMS 013	Excavation
SMS 014	Fire Protection and Prevention
SMS 015	Flammable and Combustible Liquids and Gases
SMS 016	Hand Tools and Portable Equipment
SMS 017	Hazardous Waste Operations
SMS 018	Heat Stress
SMS 019	Heavy Equipment Operations
SMS 020	Hot Work
SMS 021	Housekeeping
SMS 023	Lockout and Tagout Safety
SMS 024	Medical Screening & Surveillance
SMS 026	Noise and Hearing Conservation
SMS 028	Ladders
SMS 029	Personal Protective Equipment
SMS 032	Work Zone Traffic Control
SMS 034	Utility Clearance and Isolation
SMS 040	Fall Protection
SMS 042	Respiratory Protection
SMS 047	Biological Hazards
SMS 048	Hazardous Materials/ Dangerous Goods Shipping
SMS 049	Injury/Illness/Incident Reporting
SMS 051	Bloodborne Pathogens
SMS 052	Radiation Protection Program
SMS 056	Drilling Safety Guidelines
SMS 057	Vehicle Safety Program
SMS 059	Cold Stress
SMS 066	Incident Investigation
SMS 069	Manual Material Handling
SMS 070	Powered Industrial Trucks

ACRONYMS

Ac	Actinium
AEC	Atomic Energy Commission
AHA	Activity Hazard Analysis
APP	Accident Prevention Plan
C	Celsius
CFR	Code of Federal Regulations
CO/COR	Contracting Officer/Representative
DCE	Dichloroethene
CVOC	Chlorinated Volatile Organic Compound
DEET	N,N-diethyl-meta-toluamide
EU	Exposure Unit
F	Fahrenheit
FA-CPR	First aid-cardiopulmonary resuscitation
FS	Feasibility Study
FSP	Field Sampling Plan
FUSRAP	Formerly Utilized Sites Remedial Action Program
GDA	Government Designated Authority
GFCI	Ground Fault Circuit Interrupter
HAZCOM	Hazard Communication
HAZWOPER	Hazardous Waste Operations and Emergency Response
HR	Heart Rate
HWP	Hazardous Work Permit
IDW	Investigation-Derived Waste
IWCS	Interim Waste Containment Structure
JSA	Job Safety Analysis
kph	Kilometers per hour
kV	Kilovolts
LOOW	Lake Ontario Ordnance Works
MED	Manhattan Engineering District
mph	Miles per hour
NFSS	Niagara Falls Storage Site
OSHA	Occupational Safety and Health Administration
PAH	Polycyclic Aromatic Hydrocarbons

PCE	Tetrachloroethene
PM	Project Manager
PPE	Personal Protective Equipment
Ra	Radium
RCRA	Resource Conservation and Recovery Act
RPP	Radiation Protection Plan
RSHO	Regional Safety and Health Officer
SDS	Safety Data Sheets
SMS	Safety Management Standards
SRSO	Site Radiation Safety Officer
SS	Site Supervisor
SSHO	Site Safety and Health Officer
SSHP	Site Safety and Health Plan
TCE	Trichloroethene
Th	Thorium
TNT	Trinitrotoluene
TSCA	Toxic Substance Control Act
U	Uranium
URS	URS Group, Inc.
USACE	U.S. Army Corps of Engineers
USDOE	U.S. Department of Energy
USDOT	U.S. Department of Transportation
USEPA	U.S. Environmental Protection Agency
VC	Vinyl chloride

1.0 INTRODUCTION

This Site Safety and Health Plan (SSHP) has been developed to support work activities for the Niagara Falls Storage Site (NFSS) located in Lewiston, New York. This SSHP will be kept on the Site during field activities and reviewed as necessary. The plan includes applicable URS Safety Management Standards (SMSs). In addition, this plan adopts procedures in the project Sampling and Analysis Plan (URS 2013). The Site Supervisor (SS), Site Safety and Health Officer (SSHO), and Site Radiation Safety Officer (SRSO) are to be familiar with these SMSs and the contents of this plan. URS Group, Inc. (URS) personnel and its subcontractors must sign as acknowledgment they have become familiar with the contents of this SSHP.

1.1 Project Information and Description

PROJECT/SITE NAME: Balance of Plant Operable Unit - Investigation to Refine the Extent of Soil Contamination/NFSS, Lewiston, New York

SITE ADDRESS: 1397 Pletcher Road in Lewiston, New York

WORK AREA: The work area consists of the entire 191-acre NFSS, which is comprised of open land areas with various types of vegetation/trees, a 10-acre Interim Waste Containment Structure (IWCS) located in the southwest corner of the Site, several buildings, and infrastructure.

1.2 Key Personnel Responsible For Safety:

URS Project Manager (PM)

URS Regional Safety and Health Officer (RHSO)

URS Site Supervisor (SS)

URS Site Safety and Health Officer (SSHO)

1.3 Dates of Site Work

November 4, 2013 – February 24, 2014

1.4 Site Access

All workers and visitors must sign in and out daily at the URS Project Field Office in Building 429.

1.5 Prevailing Weather

Average high/low temperature in November (47/35°F) and December (36/24°F). Warmest month is November (record high 89°F). Coldest month is December (record low -7°F).

1.6 Site Description and History

URS will perform field investigative tasks at the Balance of Plant Operable Unit at the NFSS located at 1397 Pletcher Road in the Town of Lewiston. The NFSS represents a portion of the former Lake Ontario Ordnance Works (LOOW), a former trinitrotoluene (TNT) production plant which shut down in 1943. Portions of the LOOW site were used by the USACE Manhattan Engineer District (MED) and U.S. Atomic Energy Commission (AEC) to store radioactive residues and other materials beginning in 1944. Much of the radioactive residues sent to the NFSS originated from uranium processing activities conducted for MED and AEC at the Linde Air Products facility in Tonawanda, New York, the Mallinckrodt Chemical Works refinery in St. Louis, Missouri, and the Middlesex Sampling Plant in New Jersey.

Between 1982 and 1986, the US Department of Energy (USDOE) consolidated radioactive materials from a portion of the LOOW into a 10-acre Interim Waste Containment Structure (IWCS) on the NFSS. The IWCS is an engineered landfill designed to retard radon emissions, infiltration from precipitation, and migration of contamination to groundwater.

During the development of the remedial investigation (RI), the NFSS was divided into 14 soil exposure units (EUs) . An EU is defined as the geographic area in which a future receptor (for purposes of the baseline risk assessment) is assumed to work or live, and where a receptor may be exposed to Site-related contaminants.

Radiological constituents of concern at NFSS include isotopic uranium (U), isotopic thorium (Th), and radium (Ra)-226/228. Other constituents that occur on-site in lesser amounts include daughter products of the uranium series (Uranium-238 [U-238]) and, to some extent, the actinium (Ac) series (Uranium-235 [U-235]). Chemical constituents of concern in soil and groundwater at NFSS include chlorinated volatile organic compounds (CVOCs) and polycyclic aromatic hydrocarbons (PAHs).

1.7 Description of Specific Tasks to Be Performed

The objectives of this field investigation in support of the BOP Feasibility Study (FS) are to:

- Delineate soil contamination at 378 locations across the Site,
- Expose and evaluate the former LOOW sanitary sewer in the Exposure Unit (EU) 11,
- Perform a geophysical survey in the area south of the IWCS to identify the presence of buried structures, and
- Manage/sample/dispose of existing Investigation-Derived Waste (IDW) and IDW that will be generated during the field investigation.

More detailed descriptions of the field activities are provided in the Field Sampling Plan (FSP).

1.8 Listing of Phases of Work and Activity Hazard Analyses

An Activity Hazard Analysis (AHA) will be prepared to address tasks/activities identified within each Major Phase of Work. AHAs will be prepared in accordance with the format shown in Figure 1-2 on page 10 of EM 385-1-1 (September 15, 2008).

Phases of work anticipated are:

Phase I - Planning and Preparatory

- Preparation of Work Plans

Phase II - Field Operations

- Mobilization/Demobilization
- Sampling Location Staking
- Gamma Radiation Walkover Survey
- Geophysical Survey
- Drilling and Soil Sampling
- Excavation and Soil/Groundwater Sampling
- Locational Survey
- Site Restoration
- Manage/sample/dispose of IDW

Phase III - Close Out

- Preparation of Project Report

1.9 Revision of the SSHP

This plan will be amended or revised as project activities or conditions change or when supplemental information becomes available.

2.0 TASKS ADDRESSED UNDER THIS PLAN

2.1 Description of Major Tasks

The major work tasks that will occur during the Project were described in Sections 1.6 and 1.7 above. Health and safety risk analyses will be performed via an AHA for each task and are incorporated in this plan by reference. The AHAs address task-specific hazard recognition, hazard controls, and equipment/labor requirements for worker protection. The AHAs will be maintained in a binder at the project office. This SSHP will be amended or revised, as necessary, to incorporate any additional tasks or requirements.

2.2 Employee Orientation

Employees expecting to access the Site are required to attend an employee orientation. The training provided to the employees in the employee orientation needs to include:

- Review this SSHP.
- Present an overall Site safety briefing (general Site safety).
- Review employee responsibilities including URS Drug Policy applicability.
- Review emergency procedures and evacuation plan.
- Review injury and incident reporting procedures.
- Review reporting procedures for hazardous conditions and/or hazardous activities.
- Empower all employees with “stop work authority” when they observe a potentially dangerous condition or work practice.

Documentation of employee orientation will be recorded using the Employee Sign-Off form (Section 13).

2.3 Employee Training

Training documentation will be provided to the URS SS and/or SSHO prior to start of work operations. These documentation/certifications include training in areas such as Hazardous Waste Operations and Emergency Response (HAZWOPER), hazard communication (HAZCOM), radiation safety, and construction safety.

URS will ensure that its employees do not perform a given task without the required training. If it is determined that an employee has been allowed to perform work without the prerequisite training, he/she will not be allowed to continue to perform that task until training has been satisfactorily completed.

The following minimum training requirements apply for this project:

Training	Required Personnel
Occupational Safety and Health Administration (OSHA) 40-hour HAZWOPER Training with current 8-hour Refresher (29 Code of Federal Regulations [CFR] 1910.120)	All URS and subcontractor employees working on Site.
Radiological Worker/Authorized User Training (USACE EM-385-1-80)	All URS and subcontractor employees working on Site.
OSHA 30-hour Construction Safety	URS SSHO
Confined Space Entry Training 29 CFR 1910.146	Any workers involved in confined space entry activities.
Excavation Competent Person	At least one

2.4 HAZWOPER-Related Tasks

- Mobilization/Demobilization
- Sampling Location Staking
- Gamma Walkover Survey
- Geophysical Survey
- Drilling and Soil Sampling
- Excavation and Soil/Groundwater Sampling
- Locational Survey
- Site Restoration
- Manage/sample/dispose of IDW

Task Hazard Analysis—Field Activities

POTENTIAL HAZARDS	Mobilization/ Demobilization	Sample Location Staking; Gamma Walkover Survey; Geophysical Survey; Locational Survey	Drilling and Soil Sampling; Excavation and Soil/Groundwater Sampling	IDW Handling	Site Restoration
Flying debris/objects			X	X	X
Noise > 85dBA			X	X	X
Electrical	X	X	X	X	X
Lockout/ tagout			X		
Heat Stress/Cold Stress	X	X	X	X	X
Suspended loads	X		X	X	X
Buried utilities, drums, tanks			X		
Slip, trip, fall	X	X	X	X	X
Back injury	X	X	X	X	X
Trenches / excavations			X		
Confined Space Entry			X		
Visible lightning	X	X	X	X	X
Vehicle traffic	X	X	X	X	X
Radiological and Chemical		X	X	X	
Fires	X	X	X	X	X
Entanglement			X		X
Heavy equipment	X		X	X	X
High Pressure Washing/Decon			X		X

NOTE: A LIST OF ACTIVITY HAZARD ANALYSES (AHAS) FOR THE NFSS PROJECT IS PROVIDED IN ATTACHMENT 13 OF THE URS ACCIDENT PREVENTION PLAN (APP). NEW AHAS WILL BE INCORPORATED INTO THIS LIST WHEN NEW AND/OR UN-REVIEWED TASKS, WHICH HAVE SAFETY CONCERNS AND OR HAZARDS, ARE IDENTIFIED.

3.0 HAZARD CONTROLS

This section provides safe work practices and control measures used to reduce or eliminate potential hazards on the NFSS. These practices and controls are to be implemented by the party in control of either the Site or the particular hazard. URS employees must remain aware of the hazards affecting them regardless of who is responsible for controlling the hazards. URS employees who do not understand any of these provisions should contact the SS, the SSHO, or the SRSO for clarification.

In addition to the controls specified in this section, selected SMSs may contain checklists that are to be used in identifying and controlling potential hazards and assess the adequacy of URS site-specific safety requirements (See Attachment A). Checklists should be completed at the beginning of tasks, when tasks or conditions change, and/or or when otherwise specified by the SSHO. The checklists, including documented corrective actions, should be made part of the permanent project records, and be promptly submitted to the SS.

3.1 Project-Specific Hazards

Project-specific hazards include the items presented in the following sections. SMSs have been developed for these tasks. Employees working on the task are required to review all task-applicable SMSs prior to proceeding with the work. Any task that does not have an applicable SMS shall be brought immediately to the attention of the SS, SSHO, and SRSO. A variance must be issued by the SS, SSHO, and/or the SRSO, prior to beginning work, for any task that does not have an approved SMS and/or must deviate from the approved SMS in order to complete the task.

3.1.1 General Worker Protection Requirements

All personnel who enter the areas designated by the SS, SSHO, and/or SRSO as Active Work Areas shall have the following as a minimum.

- Sleeved Shirt (no sleeveless “tank top”)
- Long Pants
- Hardhat
- Safety Glasses
- High Visibility Reflective Vests
- Steel Toe Boots
- Access to Hearing Protection (keep a pair of ear plugs nearby)

3.1.2 Survey Lasers

- Laser beams used in surveying may be hazardous to the eyes. The severity of the hazard depends on the type of laser and its power.
- Avoid direct eye contact with the beam. This is most important when wearing corrective eyeglasses, which can intensify the beam's focus on the retina.
- Lasers used in surveying are usually low power.
- Lasers must be posted with safety warning signs.

3.1.3 Energized Electrical

Refer to the following SMSs prior to beginning any task involving energized lines or equipment: 012 "Electrical Safety"; 014 "Fire Protection and Prevention"; 023 "Lockout and Tagout Safety"; and 029 "Personnel Protective Equipment".

- Only qualified personnel, as determined by the SS and/or the SSHO, are permitted to work on unprotected energized electrical systems.
- Only authorized personnel are permitted to enter high-voltage areas.
- Do not tamper with electrical wiring and equipment unless qualified to do so. All electrical wiring and equipment must be considered energized until lockout/tagout procedures are implemented and verified.
- Inspect electrical equipment, power tools, and extension cords for damage prior to use. Defective electrical equipment must be immediately removed from service. Defective equipment will be tagged and brought to the attention of the SSHO.
- All temporary wiring, including extension cords and electrical power tools, must have ground fault circuit interrupters (GFCIs) installed.
- Extension cords must be:
  - Equipped with third-wire grounding.
  - Covered, elevated, or protected from damage when passing through work areas.
  - Protected from pinching if routed through doorways.
  - Not fastened with staples, hung from nails, or suspended with wire.
  - Appropriate size (gauge) and construction/durability for intended use.
- Electrical power tools and equipment must be effectively grounded or double-insulated UL approved.
- Operate and maintain electric power tools and equipment according to manufacturers' instructions.
- Maintain safe clearance distances between overhead power lines and any electrical conducting material unless the power lines have been de-energized and grounded, or where insulating barriers have been installed to prevent physical contact. Maintain at least 10 feet (3.0 meters) from

overhead power lines for voltages of 50 kilovolts (kV) or less, and 10 feet (3.0 meters) plus 0.5 inch for every 1 kV over 50 kV.

- Temporary lights shall not be suspended by their electric cord unless designed for suspension. Lights shall be protected from accidental contact or breakage.
- Protect all electrical equipment, tools, switches, and outlets from environmental elements.
- Electrical wiring and equipment shall be de-energized in accordance with SMS 023 "Lockout/Tagout Safety" and standard industry practices prior to conducting work.
- A variance shall be obtained from the SSHO for situations where it can be demonstrated that de-energizing introduces additional or increased hazards or is unfeasible due to equipment design or operational limitations.
- All electrical systems shall be considered energized until lockout/tagout procedures are implemented and verified.
- Always "double-check" to ensure power is not flowing through the line or equipment by using a voltage tester or similar device.
- Arc-flash protection protocols must be in place any time electricians are working on or near live circuits of 50 volts or more.
- The Energized Electrical Work Permit provided in SMS 012 "Electrical Safety" must be completed prior to working on unprotected energized electrical systems.
- Follow all control measures and procedures identified on the Energized Electrical Work Permit and all applicable SMSs, industry, NFPA and OSHA practices.

3.1.4 Drilling

Refer to the following SMSs prior to beginning drilling tasks: 026 "Noise and Hearing Conservation"; 034 "Utility Clearances and Isolation"; and 056 "Drilling Guidelines".

- Do not begin subsurface work (e.g., trenching, excavation, drilling, etc.) until a check for underground utilities and similar obstructions has been conducted. The use of as-built drawings must be confirmed with additional geophysical or other surveys.
- Contact utility companies or the state/regional utility protection service at least two (2) working days prior to excavation activities to advise them of the proposed work and to ask them to establish the location of the underground utility installations prior to the start of actual excavation. One Call utility location service is available throughout New York by calling 811 or 1-800-962-7962.
- Require a meeting at project startup regarding the drill rig operator's responsibility for rig safety, and any site- and equipment-specific safety requirements.

- Set up any sample tables and general work areas for the URS field staff at a distance of at least the height of the fully extended mast plus 5 feet (1.52 meters), and no less than 30 feet (10 meters) from the rig.
- URS engineers, technicians, and geologists will not assist the drillers with drilling equipment or supplies, and will not operate the drill rig controls except to activate the emergency shutoff, if needed.
- Require that all rotary drilling equipment have an emergency shut off/ kill switch. The location of the switch should be reviewed with all field staff.
- Drilling rigs shall be inspected by the lead driller prior to use daily. Attachment 056-1 NA – Drill Rig Inspection Checklist may be utilized to document the inspection.

3.1.5 Lockout/Tagout

Refer to SMS 023 "Lockout and Tagout Safety". Lockout and Tagout Safety refers to all electrical and/or mechanically energized equipment.

- Ensure the equipment cannot "start" while work is occurring on that equipment by disconnecting battery terminals, unplugging the device from power and/or other methods recommended by the manufacturer.
- Never work on equipment when the unexpected operation could result in injury, unless lockout/tagout procedures are implemented.
- Standard lockout/tagout procedures include the following six steps:
  1. Notify all personnel in the affected area of the lockout/tagout,
  2. Shut down the equipment using normal operating controls,
  3. Isolate all energy sources,
  4. Apply individual lock and tag to each energy isolating device,
  5. Relieve or restrain all potentially hazardous stored or residual energy (e.g., hydraulic pressure, residual electrical charges in capacitors, etc.).
  6. Verify through the use of a measurement device (if possible) that isolation and de-energizing of the equipment has been accomplished. Once verified that the equipment is at the zero energy state, work may begin.
- NEVER remove another person's lock or tag. If the work extends over a shift change, and under the direct supervision of the SS, the next crew shall replace the previous crews' locks with their

own, one worker at a time. Work shall not resume until the SS is confident the requirements of the SMSs have been followed and it is safe to return to work.

- All safe guards must be put back in place, all affected personnel notified that lockout/tagout has been removed, and controls positioned in the safe mode prior to lockout/tagout removal.

3.1.6 Excavation

Refer to the following SMSs prior to beginning excavation tasks: 013 "Excavation"; 019 "Heavy Equipment Operations"; and 034 "Utility Clearances and Isolation".

- Do not enter the excavations unless necessary, and only after the competent person has completed the required inspection and has authorized entry.
- Follow all excavation entry requirements established by the competent person.
- Do not enter excavations where protective systems are damaged or unstable.
- Do not enter excavations where objects or structures above the work location may become unstable and fall into the excavation.
- Do not enter excavations with the potential for a hazardous atmosphere until the air has been tested and found to be at safe levels.
- Do not enter excavations with accumulated water unless precautions have been taken to prevent excavation cave-in.

3.1.7 Welding and Cutting

Refer to the following SMSs prior to performing welding and cutting: 014 "Fire Protection and Prevention"; 016 "Hand Tools and Portable Equipment"; 020 "Hot Work"; and 029 "Personal Protective Equipment". Also refer to USACE Hot Work Permit, DA FORM 5383-R, SEP 1992.

- Only trained personnel are permitted to operate welding/cutting equipment.
- Do not enter areas where welding/cutting operations are taking place unless completely necessary and only after receiving permission from the welding/cutting operator.
- If you must be present in an area during welding/cutting operations, position yourself behind flash screens or wear glasses/goggles with lenses of appropriate darkness.
- Do not look directly at the welding/cutting flash or at reflective surfaces surrounding welding/cutting operations.
- Avoid contacting compressed gas cylinders. Cylinders should be properly and firmly secured in an upright position at all times.
- Be aware of tripping hazards created by welding hoses, power cables, leads, and cords positioned on walking surfaces.
- A copy of the Hot Work Permit, provided in SMS 020 "Hot Work" - Hot Work Permit (DA FORM 5383-R, SEP 1992), must also be obtained by the USACE Site supervisor.

3.1.8 Compressed Gas Cylinders

Refer to the following SMSs: 015 “Flammable and Combustible Liquids and Gases”; 020 “Hot Work”; and 029 “Personal Protective Equipment”.

- Valve caps must be in place when cylinders are transported, moved, or stored.
- Cylinder valves must be closed when cylinders are not being used and when cylinders are being moved.
- Cylinders must be secured in an upright position at all times.
- Cylinders must be shielded from welding and cutting operations and positioned to avoid being struck or knocked over, contacting electrical circuits, or exposed to extreme heat sources.
- Cylinders must be secured on a cradle, basket, or pallet when hoisted; they may not be hoisted by choker slings.

3.1.9 Fall Protection

Refer to SMS 040 “Fall Protection” prior to beginning tasks that have fall potential.

- Fall protection systems must be used to eliminate fall hazards when performing construction activities or general industry activities at a height of 4 feet (1.2 meters) or greater.
- All project personnel that may be exposed to fall hazards must review SMS 40 “Fall Protection”.
- Never use fall protection systems on which you have not been trained.
- The SS and/or SSHO shall act as competent person and shall inspect and oversee the use of fall protection systems.
- Follow all requirements established by the competent person for the use and limitation of fall protection systems.
- A registered professional engineer shall oversee the use of horizontal lifelines.
- Only one person shall be simultaneously attached to a vertical lifeline.
- Remain within the guardrail system when provided. Leaning over or stepping across a guardrail system is not permitted.
- Do not stand on objects (boxes, buckets, bricks, blocks, etc.) or ladders to increase working height on top of platforms protected by guardrails.
- Inspect personal fall arrest systems prior to each use. Do not use damaged fall protection systems at any time, or for any reason.
- Set up personal fall arrest systems so that you can neither free-fall more than 4 feet (1.2 meters) or contact any lower level.
- Only attach personal fall arrest systems to anchorage points capable of supporting at least 5,000 pounds (2,268 kilograms).

- Use fall protection equipment for fall protection only and not to hoist materials. Do not use personal fall arrest systems that have been subjected to impact loading.

3.1.10 Hand Tools

Refer to the following SMSs prior to using hand tools: 016 “Hand Tools and Portable Equipment”; 023 “Lockout and Tagout Safety”; and 029 “Personal Protective Equipment”;

- Operate all tools according to the manufacturers’ instructions, within design limitations and only to perform tasks for which they were designed.
- All hand and power tools shall be maintained in a safe condition.
- Tools are to be inspected and tested before use. If a tool is found to be defective, it is to be tagged “Do Not Use” and removed from service until repaired.
- Personal protective equipment (PPE), such as gloves, safety glasses, earplugs, and face shields, are to be used when exposed to a hazard from the tool.
- Power tools are not to be carried or lowered by the cord or hose.
- Disconnect tools from energy sources when not in use, before servicing and cleaning, and when changing accessories such as blades, bits, and cutters.
- Safety guards on tools are to remain installed while the tool is in use and promptly replaced after repair or maintenance has been performed.
- Tools are to be stored properly, where they will not be damaged or come in contact with hazardous materials.
- If a cordless tool is connected to its recharge unit, both pieces of equipment must conform strictly with electrical standards and manufacturer’s specifications.
- Tools used in an explosive environment must be rated (e.g., intrinsically safe, spark proof, etc.) for work in that environment.
- When using a knife or blade tool, stroke or cut away from the body with a smooth motion taking care not to use excessive force that could damage tool, material being cut or unprotected hands.
- Wrenches, including adjustable, pipe, end, and socket wrenches, shall not be used when jaws are sprung to the point that slippage occurs.
- Impact tools, such as drift pins, wedges, and chisels, shall be kept free of mushroomed heads.
- The wooden handles of tools shall be kept free of splinters or cracks and shall be kept tight in the tool.
- Manual and pistol grip hand tools may involve work with highly repetitive movement, extended elevation, constrained postures, or positioning of body members (e.g., hand, wrist, arm, shoulder, neck, etc.). Consider alternative tool design, improved posture, selection of appropriate materials, work organization, and sequencing to prevent muscular skeletal, repetitive motion, and cumulative trauma stressors.

- Tools with safety devices shall be tested each day before use to see that the safety devices are in proper working condition. The method of testing shall be in accordance with the manufacturer's recommended procedure.
- Belts, gears, shafts, pulleys, sprockets, spindles, drums, flywheels, chains, or other reciprocating, rotating, or moving parts of equipment shall be guarded if such parts are exposed to contact by employees or otherwise create a hazard.
- All liquid fuel-powered tools shall be stopped while being refueled, serviced, or maintained.

3.2 General Hazards

3.2.1 Housekeeping

Refer to SMS 021 "Housekeeping".

- Site work should be performed during daylight hours whenever possible. Work conducted during hours of darkness requires sufficient illumination intensity to read a newspaper without difficulty.
- Good housekeeping must be maintained at all times in all project work areas.
- Common paths of travel should be established and kept free from the accumulation of materials.
- Keep access to aisles, exits, ladders, stairways, scaffolding, and emergency equipment free from obstructions.
- Provide slip-resistant surfaces, ropes, and/or other devices to be used.
- Specific areas should be designated for the proper storage of materials.
- Tools, equipment, materials, and supplies shall be stored in an orderly manner.
- As work progresses, scrap and unessential materials must be neatly stored or removed from the work area.
- Containers should be provided for collecting trash and other debris and shall be removed at regular intervals.
- All spills shall be quickly cleaned up. Oil and grease shall be cleaned from walking and working surfaces. Spill kits and fire extinguishers will be maintained in fuel storage areas and fueling stations.

3.3 Hazard Communication

Refer to the following SMSs: 002 "Hazard Communication"; 029 "Personal Protective Equipment"; and 042 "Respiratory Protection".

The SSHO is to perform the following:

- Complete an inventory of chemicals brought on Site by URS using Attachment A in the Hazard Communications SMS.
- Confirm that an inventory of chemicals, and their safety data sheets (SDSs), brought on Site by subcontractors is available.

- URS shall obtain SDSs from the client, contractors, and subcontractors for chemicals to which URS employees and subcontractors potentially are exposed.
- Before or as the chemicals arrive on Site, obtain an SDS for each hazardous chemical and retain a copy with the SSHP on Site.
- Label chemical containers with the identity of the chemical and with hazard warnings, and store properly.
- Give the employee's necessary chemical-specific HAZCOM training.
- Store all materials properly, giving consideration to compatibility, quantity limits, secondary containment, fire prevention, and environmental conditions.

3.4 Shipping and Transportation of Chemical Products

Refer to SMS 048 "Hazardous Materials/ Dangerous Goods Shipping" and the appropriate regulations found in the US Department of Transportation (USDOT) 49 CFR Parts 100-185. In the event wastes are being shipped off-site, the following regulations may be applicable: US Environmental Protection Agency (USEPA) regulations that pertain to Resource Conservation and Recovery Act (RCRA) 40 CFR Parts 256,261, 262 and the Toxic Substances Control Act (TSCA) 40 CFR 700-789.

- Chemicals brought to the Site might be defined as hazardous materials by the USDOT.
- All staff who ship the materials or transport them by road must receive appropriate training in shipping dangerous goods.
- All hazardous materials that are shipped (e.g., via Federal Express) or are transported by road must be properly identified, labeled, packed, manifested and documented by authorized staff.
- IDW will include radiological hazards and all packages (and sample coolers) will need to be surveyed for radiological release before leaving the Site.
- Contact the SS, the SSHO, or the SRSO for additional information. Specific contact numbers may be found in Section 5.0 of this document.

3.5 Lifting

Refer to SMS 069 "Manual Material Handling" prior to beginning a lifting related task.

- Proper lifting techniques must be used when lifting any object.
    - Plan storage and staging to minimize lifting or carrying distances.
    - Get assistance when moving any materials weighing greater than 23 kilograms (50 pounds).
    - Split heavy loads into smaller loads.
    - Use mechanical lifting aids whenever possible.
    - Have someone assist with the lift, regardless of weight, for any awkward loads.
    - Make sure the path of travel is clear prior to the lift.

3.6 Fire Prevention

Refer to the following SMSs: 014 “Fire Protection and Prevention”; 020 “Hot Work”; and 021 “Housekeeping”.

- Fire extinguishers shall be provided so that the travel distance from any work area to the nearest extinguisher is less than 100 feet (30.5 meters). When 5 gallons (18.9 liters) or more of a flammable or combustible liquid is being used, an extinguisher must be within 50 feet (15.2 meters). Extinguishers must:
    - Be maintained in a fully charged and operable condition,
    - Be of the proper type to extinguish a potential fire form the material used, stored, or encountered,
    - Be visually inspected each month, and
    - Undergo a maintenance check each year.
- The area in front of extinguishers must be kept clear.
- Post “Exit” signs over exiting doors, and post “Fire Extinguisher” signs over extinguisher locations.
- Combustible materials stored outside should be at least 10 feet (3.1 meters) from any building.
- Solvent waste and oily rags must be kept in a fire resistant, covered container until removed from the Site.
- Flammable/combustible liquids must be kept in approved containers, and must be stored in an approved storage cabinet.
- Obtain a Hot Work Permit prior to any activity involving welding, cutting, grinding, or similar, activities.

3.7 Ladders

Refer to SMS 028 “Ladders”.

- Ladders must be inspected by a competent person for visible defects prior to each day’s use.
- Defective ladders must be tagged-out and removed from service.
- Ladders must be used only for the purpose for which they were designed and shall not be loaded beyond their rated capacity.
- Only one person at a time shall climb on, or work from, an individual ladder.
- User must face the ladder when climbing up and down; keep belt buckle between side rails.
- Ladders shall not be moved, shifted, or extended while in use.
- User must use both hands to climb; use rope to raise and lower equipment and materials.
- Straight and extension ladders must be placed on a firm surface, secured to prevent the base from slipping and secured at the top.

- Ladders that may be displaced by work activities or traffic must be secured or barricaded.
- Portable ladders must extend at least 3 feet (0.9 meters) above landing surface.
- Straight and extension ladders must be positioned at such an angle that the ladder base to the wall is one-fourth of the working length of the ladder.
- Stepladders are to be used in the fully opened and locked position.
- Users are not to stand on the top two steps of a stepladder; nor are users to sit on top or straddle a stepladder.
- Fixed ladders > 24 feet (7.3 meters) in height must be provided with fall protection devices.
- Fall protection should be considered when working from extension, straight, or fixed ladders greater than 6 feet (1.8 meters) from lower levels and both hands are needed to perform the work, or when reaching or working outside of the plane of ladder side rails.

3.8 Heat Stress

Refer to SMS 018 “Heat Stress”.

- Stay hydrated. Disposable cups and water maintained at 50 ^{o} to 60° F (10 ^{o} to 16° C) should be available. Under severe heat conditions, drink 1 to 2 cups every 20 minutes, for a total of 1 to 2 gallons (3.8 to 7.6 liters) per day.
- Never use alcohol in place of water or other nonalcoholic fluids. Decrease your intake of coffee and caffeinated soft drinks during working hours.
- Acclimate yourself by slowly increasing workloads (i.e., do not begin with extremely demanding activities).
- Use cooling devices, such as cooling vests, to aid natural body ventilation. These devices add weight, so their use should be balanced against efficiency.
- Use mobile showers or hose-down facilities to reduce body temperature and cool protective clothing.
- Conduct field activities in the early morning or evening and rotate shifts of workers, if possible.
- Avoid direct sun whenever possible, which can decrease physical efficiency and increase the probability of heat stress. Take regular breaks in a cool, shaded area.
- Provide adequate shelter/shade to protect personnel against radiant heat (sun, flames, hot metal).
- Maintain good hygiene standards by frequently changing clothing and showering.
- Observe one another for signs of heat stress. Persons who experience signs of heat syncope, heat rash, or heat cramps should consult the SS or SSHO to avoid progression of heat-related illness.

SYMPTOMS AND TREATMENT OF HEAT STRESS					
	Heat Syncope	**Heat Rash**	**Heat Cramps**	**Heat Exhaustion**	**Heat Stroke**
Signs and Symptoms	Sluggishness or fainting while standing erect or immobile in heat.	Profuse tiny raised red blister-like vesicles on affected areas, along with prickling sensations during heat exposure.	Painful spasms in muscles used during work (arms, legs, or abdomen); onset during or after work hours.	Fatigue, nausea, headache, giddiness; skin clammy and moist; complexion pale, muddy, or flushed; may faint on standing; rapid ready pulse and low blood pressure; oral temperature normal or low	Red, hot, dry skin; dizziness; confusion; rapid breathing and pulse; high oral temperature.
Treatment	Remove to cooler area. Rest lying down. Increase fluid intake. Recovery usually is prompt and complete.	Use mild drying lotions and powders, and keep skin clean for drying skin and preventing infection.	Remove to cooler area. Rest lying down. Increase fluid intake.	Remove to cooler area. Rest lying down, with head in low position. Administer fluids by mouth. Seek medical attention.	Cool rapidly by soaking in cool, but not cold, water. Call ambulance, and get medical attention immediately!

Monitoring Heat Stress

These procedures should be considered when the ambient air temperature exceeds 70°F (21°C) for personnel wearing chemical protective clothing and 90°F (32°C) for personnel wearing standard permeable work clothes (refer to SMS 018). The Humidex method will be used when standard work clothes are worn. This method requires local air temperature and relative humidity to determine the Humidex Value on the Humidex Worksheet (SMS 018-1). Adjustments are then made based on Radiant Heat, Clothing, Acclimatization and Work Load to determine the guidance for the work/rest regime. Physiological monitoring will be performed as indicated by the Humidex system or when air temperatures exceed 70°F (21°C) and personnel wearing chemical protective clothing. Employee's body temperature and pulse rate at least every hour and recorded on the Heat Stress Monitoring Record (SMS 018-2). Work/rest regimes will be determined by the change in body temperature or pulse rate as indicated in SMS 018.

3.9 Cold Stress

Refer to SMS 059 "Cold Stress".

- Be aware of the symptoms of cold-related disorders, and wear proper, layered clothing for the anticipated fieldwork. Appropriate rain gear is a must in cool weather.
- Personnel who are required to work outside must have their own cold weather apparel and are required to have this apparel with them at the project Site during the cold weather months.
- Consider monitoring the work conditions and adjusting the work schedule using guidelines such as the wind-chill index.
- Wind-chill index is used to estimate the combined effect of wind and low air temperatures on exposed skin. The wind-chill index does not take into account the body part that is exposed, the level of activity, or the amount or type of clothing worn. For those reasons, it should only be used as a general guideline to warn workers of situations that could cause cold-related illnesses.
- Observe one another for initial signs of cold-related disorders. Persons who experience initial signs of immersion foot, frostbite, or hypothermia should consult the SS and/or Safety Officer and seek proper treatment to avoid progression of cold-related illness.
- Review the weather forecast—be aware of predicted weather systems along with sudden drops in temperature, increase in winds, and precipitation.

SYMPTOMS AND TREATMENT OF COLD STRESS			
	Immersion (Trench) Foot	**Frostbite**	**Hypothermia**
Signs and Symptoms	Feet discolored and painful; infection and swelling present.	Blanched, white, waxy skin, but tissue resilient; tissue cold and pale.	Shivering, apathy, sleepiness; rapid drop in body temperature; glassy stare; slow pulse; slow respiration.
Treatment	Seek medical treatment immediately.	Remove victim to a warm place. Re-warm area quickly in warm – but not hot – water. Have victim drink warm fluids, but not coffee or alcohol. Do not break blisters. Elevate the injured area, and get medical attention.	Remove victim to a warm place. Have victim drink warm fluids, but not coffee or alcohol. Get medical attention.

3.10 Procedures for Locating Buried Utilities

Refer to SMS 034 "Utility Clearance and Isolation".

Local Utility Mark-Out Service

Name: DigSafelyNewYork

Phone: 1-800-962-7962 or 811

Underground Utilities

Do not begin subsurface construction activities (e.g., drilling, excavation, etc.) until a check for underground utilities has been conducted by the local utility clearance company and the SS issues their approval to proceed.

- Use as-built drawings and utility company records, if available, as sources for identifying the general locations of utilities.
- Underground utility locations must be physically verified by hand digging using wood or fiberglass-handled tools when any intrusive work is expected to come within 5 feet (1.5 meters) of the marked underground system.
- Protect and preserve the markings of approximate locations of facilities until the markings are no longer required for safe and proper excavations. If the markings of utility locations are destroyed or removed before intrusive work commences or is completed, the SS must notify the utility company or utility protection service to inform them that the markings have been destroyed.
- Conduct a detailed Site briefing about the utilities, their hazards, and the means by which the operation will maintain a safe working environment.
- Always watch for signs of subsurface utilities during intrusive work.

3.11 Confined Space Entry

Refer to SMS 010 "Confined Space Entry". Refer to additional SMSs applicable to the work and environment of the planned task. Also refer to USACE Buffalo NY District - Confined Space Entry Permit/Attachment-1.

The following requirements must be met prior to confined space entry:

- Confined space entrants, attendants, and entry supervisors must complete the Confined Space Entry training.
- A Confined Space Entry Permit must be completed and posted near the space entrance point for review.
- Each confined space entrant and attendant must attend a pre-entry briefing conducted by the entry supervisor and SSHO.

- Each confined space entrant and attendant must verify that the entry supervisor has authorized entry and that all permit or certificate requirements have been satisfied.
- Only individuals listed on the Authorization/Accountability Log are permitted to enter the space.
- Each confined space entrant and attendant must verify that atmospheric monitoring has been conducted at the frequency specified on the permit or certificate and that monitoring results are documented and within acceptable safe levels.

The following requirements must be met during confined space entry:

- Communication must be maintained between the attendant and entrants to enable the attendant to monitor entrant status.
- Entrants must use equipment specified on the permit or certificate accordingly.
- All permit or certificate requirements must be followed.
- Entrants must evacuate the space upon orders of the attendant or entry supervisor, when an alarm is sounded, or when a prohibited condition or dangerous situation is recognized.
- Entrants and attendants must inform the entry supervisor of any hazards confronted or created in the space or any problems encountered during entry.

3.12 Vehicle Safety—Operator Safety

Refer to SMS 057 “Vehicle Safety Program”.

- Operate vehicle only when in possession of valid driver’s license.
- Employees shall not operate vehicles while under the influence of drugs or alcohol. Consumption of drugs or alcoholic beverages before or during work shift/driving is prohibited, as is possession of them within vehicle.
- All vehicle occupants must use seat belts at all times. Familiarize yourself with rental vehicle features (e.g., mirror & seat adjustments).
- Authorized drivers will attend a defensive driving training equivalent to the National Safety Counsel’s 4-hr defensive driving class.
- Adjust headrest to proper position.
- Always drive within the speed limit.
- Do not drive if you are fatigued.
- Tie down loose items when driving a pickup, truck or van.
- Exercise caution when exiting road or parking along street—avoid sudden stops, use flashers when stopping at work areas.
- Park in a manner that will allow for safe exit from vehicle, and where practicable, park vehicle so the vehicle can pull forward to leave the parking space.
- Pull off the road, and put the car in park before talking on a mobile phone.

- Maintain both a First Aid kit and Fire Extinguisher in the field vehicle at all times.
- Park vehicle in a location where it can be accessed easily in the event of an emergency. Maintain a copy of emergency contact numbers and hospital directions in the vehicle.
- Cell phone use (including hands-free devices and texting) is prohibited while driving.

3.13 Working/Walking Adjacent to Vehicle Traffic

Refer to SMS 032 "Work Zone Traffic Control".

- When possible, walk along edge of parking lots and roads, or in designated pedestrian ways.
- All personnel must wear reflective/high-visibility ANSI Class 2 safety vests in active work areas (exception: office area.).
- When initially establishing a work zone, pre-plan to designate separate pedestrian routes from vehicular routes (including parking and staging) when possible.
- To protect from flying debris, eye protection should be worn while walking/working near or on highways.
- Work as far from road as possible to avoid creating confusion for drivers.
- Remain aware of factors that influence traffic related hazards and required controls—sun glare, rain, wind, flash flooding, limited sight-distance, hills, curves, guardrails, width of shoulder (i.e., breakdown lane), etc.
- Always remain aware of an escape route - behind an established barrier, parked vehicle, guardrail, etc.
- Always pay attention to moving traffic - never assume drivers see you.
- Remain aware of approaching traffic for signs of erratic driver behavior.
- All vehicles should be parked at least 40 feet (12.2 meters) away from the work zone and traffic except for those vehicles in direct support of the work activity.
- If necessary, obtain the proper traffic control devices to ensure that your work area is adequately protected. Traffic control devices should: (1) convey a clear meaning/warning, (2) be understood by the typical driver, and (3) be placed to give drivers adequate time for proper response.
- Flagmen should be used when (1) two-way traffic is reduced to using one common lane, (2) driver visibility is impaired or limited by project activities, (3) project vehicles enter or exit street traffic in an unexpected manner, or (4) the use of a flagger enhances established traffic warning.

3.14 Vehicles Entering/Exiting Site

- Vehicles entering or leaving the Site will receive the required decontamination and radiological scanning.
- If heavy equipment must be backed into the Site, a flagman/spotter must be used.

- If vehicle will impede (is slow-moving) the normal flow of traffic when pulling into/out of the Site, a flagger must also be used. Once the vehicle is on the roadway, a field vehicle equipped with flashing lights will follow the heavy equipment vehicle.
- It is imperative that truck operations do not pose a traffic hazard to pedestrians and normal road traffic.

3.15 Uneven Walking/Working Surfaces

- Employees walking in ditches, swales and other drainage structures adjacent to roads or across undeveloped land must use caution to prevent slips and falls, which can result in twisted or sprained ankles, knees, and backs.
- Whenever possible, work or observe from a flat surface and do not enter a steep ditch or side of a steep roadbed.
- If steep terrain must be negotiated, sturdy shoes or boots with good traction that provide ankle support should be used.

3.16 Slips, Trips, and Falls

Refer to SMS 021 “Housekeeping” and any additional SMSs specifically related to the planned task. Sprained and strained joints can require a long recovery period.

- Institute and maintain good housekeeping practices at all times.
- Pick up tools, remove debris and eliminate tripping hazards in the work area.
- Place extension cords, airlines, ropes, etc., under a barricade to eliminate tripping hazards.
- Walk or climb only on equipment and/or surfaces specifically designed for personnel access.
- Watch for slippery/poor footing and other potential slipping and tripping hazards in the work area that could result in a fall or serious injury (especially during winter conditions).

3.17 Pressure Washer/Steam Cleaner Operations

Refer to SMS 029 “Personal Protective Equipment”.

- Wear appropriate personal protective equipment when operating a pressure washer/steam cleaner that includes a face shield, eye protection, hearing protection, gloves, and other protective clothing.
- Follow manufacturer’s safety and operating instructions.
- Use extended pressure wash wands to minimize contact with overspray.
- Inspect pressure washer/steam cleaner before use and confirm deadman’s (or kill) switch is fully operational.
- NEVER wash your hands, boots, or other items with a pressure washer.

3.18 Vacuum Truck Operations

Refer to the following SMSs: 014 “Fire Protection and Prevention”; 029 “Personal Protective Equipment”; and 070 “Powered Industrial Trucks”.

- Qualified subcontractors are the only personnel authorized to operate a vacuum truck.
- Locate the observers upwind of the tank or container being emptied.
- Keep hands from vacuum hose inlet.
- Wear protective gloves and hearing protection in the immediate vicinity.

3.19 Inclement Weather

Adverse weather conditions and work situations requiring immediate suspension of fieldwork activities are defined in the following list:

- Any observable thunder or lightning means stop work and immediately go to shelter. Remember, if you can hear thunder you can be struck by lightning.
- Use thunderstorm watches or warnings issued by the National Weather Service as an alert to potential electric activity.
- Typically, when thunder and/or lightning are observed, a 30-minute stand-down occurs to allow the storm cell to pass the area.
- If lightning or thunder is observed within the stand down period, the 30-minute time frame is extended until electrical activity ceases.
- The SSHO and/or SS can monitor multiple sources to track developing potential for lightning. These are the following:
    - Doppler radar reports from the Internet
    - National Weather Service radio reports
- Field crews are to immediately report any observations of lightning or thunder in their area to the SS and/or SSHO.
- Cease high profile work when sustained wind speeds of 25 mph (40 kph) or wind gusts of 35 mph (56 kph) are observed and where wind chill is not a factor (i.e., temperatures greater than 60°F [16°C]).
- Cease all other land-based work when sustained wind speeds of 40 mph (64 kph) or wind gusts of 45 mph (72 kph) are observed.
- Cease hoisting operations during moderate to heavy rain and/or snowfall events. Freezing rain is also cause for suspension of hoist use.
- An equivalent wind chill factor of -24°F (-31°C) on the wind chill factor chart (below) will trigger systematic shut down of all non-emergency work activities.

- A tornado warning for the general area or county will result in a Site work stoppage. Move immediately to a proper shelter until the threat has passed and the SS and/or SSHO informs you it is safe to return to work.

Wind Chill Chart

Wind (mph) \ Temperature (°F)	Calm	40	35	30	25	20	15	10	5	0	-5	-10	-15	-20	-25	-30	-35	-40	-45
5		36	31	25	19	13	7	1	-5	-11	-16	-22	-28	-34	-40	-46	-52	-57	-63
10		34	27	21	15	9	3	-4	-10	-16	-22	-28	-35	-41	-47	-53	-59	-66	-72
15		32	25	19	13	6	0	-7	-13	-19	-26	-32	-39	-45	-51	-58	-64	-71	-77
20		30	24	17	11	4	-2	-9	-15	-22	-29	-35	-42	-48	-55	-61	-68	-74	-81
25		29	23	16	9	3	-4	-11	-17	-24	-31	-37	-44	-51	-58	-64	-71	-78	-84
30		28	22	15	8	1	-5	-12	-19	-26	-33	-39	-46	-53	-60	-67	-73	-80	-87
35		28	21	14	7	0	-7	-14	-21	-27	-34	-41	-48	-55	-62	-69	-76	-82	-89
40		27	20	13	6	-1	-8	-15	-22	-29	-36	-43	-50	-57	-64	-71	-78	-84	-91
45		26	19	12	5	-2	-9	-16	-23	-30	-37	-44	-51	-58	-65	-72	-79	-86	-93
50		26	19	12	4	-3	-10	-17	-24	-31	-38	-45	-52	-60	-67	-74	-81	-88	-95
55		25	18	11	4	-3	-11	-18	-25	-32	-39	-46	-54	-61	-68	-75	-82	-89	-97
60		25	17	10	3	-4	-11	-19	-26	-33	-40	-48	-55	-62	-69	-76	-84	-91	-98

Frostbite Times: 30 minutes, 10 minutes, 5 minutes

$$\text{Wind Chill (°F)} = 35.74 + 0.6215T - 35.75(V^{0.16}) + 0.4275T(V^{0.16})$$

Where, T= Air Temperature (°F) V= Wind Speed (mph)

Effective 11/01/01

3.20 Radiological and Chemical Hazards

3.20.1 Radiological

Refer to SMS 052 "Radiation Protection Program" and the URS Radiation Protection Plan (RPP) presented in Appendix B of the APP. The surface and subsurface soils and groundwater at the NFSS have the potential to contain various levels of radiological materials (isotopic uranium, isotopic thorium, and radium-226/228, Radium-226, Thorium-230, Uranium-234 and Uranium-238). Routine radiological surveys, bioassays, and dosimetry will be used on Site to monitor/control potential exposures to these radiological contaminants.

3.20.2 Chemical

The surface and subsurface soils and groundwater at the NFSS have the potential to contain various levels of CVOCs (i.e., tetrachloroethene [PCE] and its degradation products trichloroethene [TCE], cis-1,2-dichlorethene [DCE], trans-1,2-DCE, and vinyl chloride [VC]) and PAHs. Routine surveys and air sampling will be conducted on Site to monitor/control potential exposures to these chemical contaminants. Health and safety monitoring procedures are detailed in section 7.0 of this SSHP. URS will provide any chemical monitoring data and interpretation of results to the USACE Government Designated Authority (GDA).

3.21 Biological Hazards and Controls

Refer to SMS 047 "Biological Hazards".

Snakes

Snakes typically are found in underbrush and tall grassy areas. If you encounter a snake, stay calm and look around; there may be other snakes. Turn around and walk away on the same path you used to approach the area. If a person is bitten by a snake, wash and immobilize the injured area, keeping it lower than the heart if possible. Seek medical attention immediately. **DO NOT** apply ice, cut the wound, or apply a tourniquet. Try to identify the type of snake: note color, size, patterns, and markings.

Poison Ivy and Poison Sumac

Poison ivy, poison oak, and poison sumac typically are found in brush or wooded areas. They are more commonly found in moist areas or along the edges of wooded areas. Become familiar with the identity of these plants. Wear protective clothing that covers exposed skin and clothes. Avoid contact with plants and the outside of protective clothing. If skin contacts a plant, wash the area with soap and water immediately. If the reaction is severe or worsens, seek medical attention.

Ticks

Ticks typically are in wooded areas, bushes, tall grass, and brush. Ticks are black, black and red, or brown and can be up to ¼-inch in size. Wear tightly woven light-colored clothing with long sleeves and pant legs tucked into boots; spray **only outside** of clothing with permethrin or Permanone ®; spray skin with only DEET (N,N-diethyl-meta-toluamide); and check yourself frequently for ticks.

If bitten by a tick, grasp it at the point of attachment and carefully remove it. After removing the tick, wash your hands and disinfect and press the bite areas. Save the removed tick. Report the bite to the URS Occupational Health Manager. Look for symptoms of Lyme disease or Rocky Mountain spotted fever. Lyme disease: a rash might appear that looks like a bull's-eye with a small welt in the center. Rocky Mountain spotted fever: a rash of red spots under the skin 3 to 10 days after the tick bite. In both cases, chills, fever, headache, fatigue, stiff neck, and bone pain may develop. If symptoms appear, seek medical attention.

Wasps, Bees and Other Stinging Insects

Wasps, bees, and other stinging insects may be encountered almost anywhere and may present a serious hazard, particularly to people who are allergic. Watch for and avoid nests. Keep exposed skin to a minimum.

- Carry a "Sting Kit" (EpiPen®) if you have had allergic reactions in the past and immediately seek help if you are stung. In severe allergic reaction cases, seek IMMEDIATE medical attention.
- Inform the SS, the SSHO, and your work buddy if you are allergic to wasp and bee stings.
- If a stinger is present, remove it carefully with tweezers. Wash and disinfect the wound, cover it, and apply ice.
- If you have never experienced an allergic reaction to a sting, do not assume you will not have one. Watch the sting area for an allergic reaction (excessive swelling, difficult breathing, light headedness, etc.). Inform the SS and seek medical attention if a reaction develops.

Blood Borne Pathogens

Refer to the following SMSs: and 029 "Personal Protective Equipment" and 051 "Bloodborne Pathogens".

Exposure to blood borne pathogens may occur when rendering first aid-cardio pulmonary resuscitation (FA-CPR) to a co-worker who has been injured. Exposure controls and PPE are required as specified in the SMS.

Individuals who know they have an easily communicable disease shall discuss this condition, and the work they are expected to perform, with their medical professional. These individuals must have specific written permission from their medical professional before reporting to the Site to work. Hepatitis B vaccination must be offered to each employee before the person participates in a task where exposure is a possibility.

Mosquitoes and West Nile Virus

Human illness from West Nile virus is rare, even in areas where the virus has been reported. On rare occasions, West Nile virus infection can result in a severe and sometimes fatal illness known as West Nile encephalitis (an inflammation of the brain). The risk of severe disease is higher for persons 50 years of age and older.

Most infections of West Nile encephalitis are mild, and symptoms include fever, headache, and body aches, occasionally with skin rash and swollen lymph glands. More severe infection may be marked by headache, high fever, neck stiffness, stupor, disorientation, coma, tremors, convulsions, muscle weakness, paralysis, and rarely, death. The incubation period in humans (i.e., time from infection to onset of disease symptoms) for West Nile encephalitis is usually 3 to 15 days. If symptoms occur, see your doctor immediately.

You can reduce your chances of becoming ill by protecting yourself from mosquito bites. To avoid mosquito bites:

- Apply insect repellent containing DEET when you're outdoors. Apply sparingly to exposed skin. DEET in high concentrations (greater than 35 percent) provides no additional protection.
- Spray clothing with repellents containing permethrin (Permanone ®) or DEET since mosquitoes may bite through clothing.
- Read and follow the product directions whenever you use insect repellent, particularly if they contain permethrin.
- Wear long-sleeved clothes and long pants treated with repellent and stay indoors during peak mosquito feeding hours (dusk until dawn) to further reduce your risk.

3.22 Contaminants of Concern

Refer to the following SMSs: 002 "Hazard Communication" and 029 "Personal Protective Equipment".

The surface and subsurface soils and groundwater at the NFSS have the potential to contain levels of CVOCs, PAHs, and/or radiological contaminants. Workers who have the potential to be in direct contract with these surface and subsurface soils or groundwater will be provided PPE in accordance with the referenced SMSs.

3.23 Potential Routes of Exposure

Refer to the following SMSs: 029 'Personal Protective Equipment" and 042 "Respiratory Protection".

The following are the primary routes of exposure:

- **Dermal:** Contact with contaminated media. This route of exposure is minimized through proper use of PPE, as specified in the SMS.
- **Inhalation:** Airborne contaminated particulates. This route of exposure is minimized through monitoring and proper respiratory protection, if required.
- **Other:** Inadvertent ingestion of contaminated media. This route should not present a concern if good hygiene practices are followed (e.g., wash hands and face before drinking or smoking).

4.0 PROACTIVE HEALTH AND SAFETY PROGRAM

URS will use a proactive approach to health and safety. Personnel are expected to actively participate in the health and safety program by ensuring they have the proper PPE, tools, and training prior to beginning a task and also by watch for unsafe conditions while they are working.

Everyone has the authority to temporarily stop work on a task when they observe a situation that could result in injury to themselves, co-workers, equipment, and/or property. When an unsafe situation exists, stop the activity and point out the problem. You are then expected to assist your co-workers in correcting the problem and then to notify the SS and SSHO. Specific contact information is provided in Section 6.0 of this document. Inform the person you contacted what occurred, and how it was corrected. Further inform them if there is a potential for the problem to reoccur.

A proactive health and safety system uses "tools" which allow all the workers to participate in the process. The basic loss prevention tools that will be used to implement a proactive approach to health and safety on this project include:

- AHAs
- Pre-Task Safety Meetings
- Incident Investigations

The SS will ensure that all subcontractors develop and implement AHAs, safety meetings, and investigations (if needed) on the project.

4.1 AHA and Hazardous Work Permits

An AHA will be prepared/reviewed before beginning each project activity posing health and safety hazards to project personnel. The AHA is first prepared in a short meeting by the personnel assigned to perform the activity, recording details of the activity on the AHA form. An AHA is completely flexible and is expected to be revised as work progresses on a task.

The AHA defines the activity being performed, the hazards posed and control measures (training, inspections, PPE, etc.) required to perform the work safely. All workers are briefed on the AHA each day before doing the work. Worker input is solicited during the performance of work to further identify the hazards posed and control measures required. In addition, a listing of the equipment to be used to perform the activity, inspection requirements, and training requirements for the safe operation of the equipment listed must be identified. The SS, SSHO, and/or the SRSO must review and concur with the AHA. A list of AHAs is provided in Attachment 13 of the URS APP.

The use of AHAs better promotes worker participation in the hazard recognition and control process, while reinforcing the task-specific hazard and required H&S procedures with the crew each day. The use of AHAs and/or Job Safety Analyses (JSAs) is a common safety practice in the construction industry.

Hazardous work permits (HWPs) will be developed using information from the AHAs. HWPs will be used to document the hazards and the controls/PPE to address the identified hazards. Completed or expired permits shall be kept with Site project files.

4.2 Daily Pre-Task Safety Meeting

Daily safety meetings (also known as "Tailgate Safety Meeting") are brief safety and work orientation meetings held at the beginning of each shift. All project personnel are required to be in attendance, to review the applicable AHAs and HWPs and their related /required health and safety procedures, and to discuss any other important information regarding the task to be accomplished.

Typically, the safety meetings are held between the SSHO, crew supervisors, and their work crews to focus on those tasks assigned, procedures to be followed, and the hazards posed to individual work crews. Usually each major work crew will hold its own safety meeting. If the need arises to hold a Site-wide safety meeting, the crew supervisors will be informed of the meeting location and to direct their personnel to meeting. All Site personnel are required to sign a safety meeting attendance form every day. Copies of the attendance/signoff sheets for the daily tailgate meetings will be attached to the daily reports submitted to the USACE.

4.3 Incident Investigations

Refer to the following URS SMSs: 049 "Injury/Illness/Incident Reporting" and 066 "Incident Investigation". In addition to completing all URS incident reporting/investigation requirements, a USACE Accident Investigation Report will also be completed and submitted to the Contracting Officer/Representative (CO/COR). Incident Investigations shall be performed for all URS incidents involving:

- Person injuries/illnesses
- "Near miss" (meaning an injury, property damage, and/or an accident was barely avoided)
- Equipment/property damage
- Spills, leaks, regulatory violations
- Motor vehicle accidents

The causes of incident and near misses are similar, so by identifying and correcting the causes of near misses, future incidents may be prevented. The following is the Incident Investigation Process:

- Gather all relevant facts, focusing on fact-finding, not fault-finding, while answering the "who, what, when, where, and how" questions.
- Draw conclusions supported by the facts (not opinions), putting those facts together into a probable scenario.
- Determine incident root cause(s), which are basic causes why an unsafe act/condition existed.
- Develop and implement solutions, matching all identified root causes with solutions.
- Communicate the incident as a Lesson Learned to all project personnel.
- Field follow-up on implemented corrective active action to confirm solution is appropriate.

The SS and/or SSHO shall perform an investigation, as soon as practical after incident occurrence during the day of the incident, for Incidents that occur on the project. The "Incident Report" form contained in SMS 049 "Injury/Illness/Incident Reporting" shall be used to document the investigation.

All incidents involving personal injury, property damage, or near miss incidents that could have resulted in serious consequences shall be investigated by completing the incident investigation forms and submitting them to the SS and/or SSHO within 24 hours of incident. A preliminary report shall be submitted to the SS within 24 hours of when the incident occurs.

Notification requirements to the USACE shall be followed as specified in the URS APP.

5.0 PROJECT ORGANIZATION AND PERSONNEL

5.1 URS Project Personnel

The following personnel have been assigned to the NFSS project in the following capacity:

Employee Name	Office	Responsibility	Mobile Phone
[redacted]	URS	Project Manager	[redacted]
[redacted]	URS	Field Coordinator	[redacted]
[redacted]	URS	Site Supervisor	[redacted]
[redacted]	URS	Site Safety and Health Officer	[redacted]
[redacted]	URS	Health Physics Support	[redacted]
[redacted]	URS	Occupational Health Manager	[redacted]

URS Employee Responsibilities

The Site workers are to be compliant with state and federal hazardous waste operations requirements for HAZWOPER. This would include, but not be limited to, 40-hour initial training, 3-day on-the-job experience, and 8-hour annual refresher training. Certain tasks (e.g., confined-space entry) and contaminants (e.g., lead) may require additional training and medical monitoring. Site workers shall also be compliant with requirements for Radiological Worker training, as outlined in the RPP.

Employees designated “Supervisor” will have completed the required training, and have documented requisite field experience. All workers who are currently certified by the American Red Cross, or equivalent, in FA-CPR are requested to provide a copy of their training to their supervisor. A list of FA-CPR trained personnel will be posted in each break/assembly area.

Two (2) FA-CPR designated employees must be present during execution of work activities.

Each worker is responsible for the following performance objectives:

- During any task, employees must consider the possible effects of their actions on themselves and others and take appropriate protective measures.
- Complete a health and safety orientation prior to being authorized to enter the project work areas.

- Employees are required to review, be familiar with, and adhere to site-specific jobsite health and safety plans, procedures, practices, precautions, and permits.
- Use only safe means of access to and from work areas.
- Perform work in a safe manner and produce quality results; complete work without injury, illness, or property damage. Report to your supervisor any observed defects beyond your ability to repair.
- Use the right tool or equipment for the job.
- All disruptive activities, such as horseplay, practical jokes, etc., are forbidden.
- Practice good housekeeping and keep your work area clear of debris and extra tools. At the end of each phase of work, return all tools and excess material to proper storage areas. Clean up all debris as work progresses. Each employee is responsible for keeping his or her work areas clean.
- The employee is responsible for wearing appropriate PPE in operations where there is exposure to hazardous conditions, or where need is indicated to reduce hazards. At a minimum, hard hats, safety shoes, high-visibility safety vests, and safety glasses will be worn at all times within designated work areas on Site.
- Hearing protection will be worn in when sound levels may exceed 85 decibels. A practical test to determine if hearing protection is needed is if you cannot easily hear a person speaking to you in a normal conversational voice from 2 feet (0.6 meter) away, then you need to use hearing protection.

Drug-Free Workplace

URS does not tolerate illegal drugs, or any use of drugs, controlled substances, or alcohol that impairs an employees work performance or behavior. URS employees shall not be involved in any manner with the unlawful manufacture, distribution, dispensation, possession, sale, or use of illegal drugs in the workplace. Any violation of these prohibitions may result in discipline or immediate discharge. All employees will be subject to post-incident testing in the event of an accident and/or injury requiring medical attention.

5.2 Field Team Chain-of-Command and Communication Procedures

Project Manager (PM)

The PM is responsible for providing adequate resources (budget and staff) for project-specific implementation of the health and safety process. The PM has overall management responsibility for the project. The PM may explicitly delegate specific tasks to other staff, as described in sections that follow, but retains ultimate responsibility for completion of the following in accordance with this document:

- Incorporate standard terms and conditions and contract-specific roles and responsibilities in contract and subcontract agreements (including flow-down requirements to lower-tier subcontractors).

- Select safe and competent subcontractors.
- Obtain, review, and accept or reject subcontractor pre-qualification questionnaires.

Ensure that acceptable certificates of insurance, including URS as named additional insured, are secured as a condition of subcontract award.

- Incorporate health and safety information in subcontract agreements, and ensure that appropriate site-specific safety procedures, training, and medical monitoring records are reviewed and accepted prior to the start of subcontractor's field operations.
- Maintain copies of subcontracts and subcontractor certificates of insurance, bond, contractor's license, training and medical monitoring records, and site-specific safety procedures in the project file accessible to Site personnel.
- Evaluate subcontractor practices and compliance with their Health and Safety Plan(s) (HASP).
- Manage the Site and interface with third parties in a manner consistent with contract and subcontract agreements.
- Ensure that the overall, job-specific health and safety goals are fully and continuously implemented.

Regional Safety and Health Officer (RSHO)

The URS RSHO is responsible for the following:

- Review and accept or reject subcontractor pre-qualification questionnaires with participation from contracting personnel.
- Review and accept or reject subcontractor training records and site-specific safety procedures prior to start of subcontractor's field operations.
- Support the SS's oversight of subcontractor (and lower-tier subcontractors) health and safety practices and interface with on-site third parties per the SSHP.
- Assist with program implementation as needed.
- Provide technical support.
- Conduct health and safety audits.

Field Investigation Coordinator

The Field Investigation Coordinator is responsible for supporting the PM in all aspects of the project, coordinating field activities, coordinating subcontractors, and supporting field personnel.

Site Supervisor (SS) and Assistant Site Supervisor

The SS and Assistant SS are responsible for the following:

- Verify that the project is conducted in a safe manner.
- Verify that the SSHP is current and amended when project activities or conditions change.
- Verify team members and subcontractors read the SSHP and sign the Employee Signoff Form, prior to commencing field activities.
- Verify and document team members have completed any required specialty training (e.g., fall protection, confined space entry) and medical surveillance.
- Verify compliance with the requirements of the SSHP and applicable subcontractor health and safety plan(s).
- Act as the project "Hazard Communication Coordinator" and perform the responsibilities outlined in the SSHP.
- Act as the project "Emergency Response Coordinator" and perform the responsibilities outlined in the SSHP.
- Verify that safety meetings are conducted and documented in the project file as needed throughout the course of the project (e.g., as tasks or hazards change).
- Verify that project health and safety forms and permits are being used as outlined in the SSHP.
- Perform assessments of contractor health and safety practices and compliance with their HASP and verify that project activity self-assessment checklists are being used by URS team members.
- Conduct safety briefings weekly to NFSS team members and subcontractor supervisors. Require subcontractors to lead their own safety briefings as appropriate.
- Implement Drug-Free Workplace Policy.
- Provide open communication with employees.
- Ensure that programs are effectively functioning to prevent and control hazards on the project.
- Provide opportunities for safety involvement to project employees.

URS Onsite Subcontractor

Sampling Support/Excavation

Subcontractor: Russo Development, Inc.

Telephone: 716-844-8745

Geophysical Survey

Subcontractor: Hager-Richter Geoscience

Telephone: 603-893-9944

The subcontractors listed above must be provided a copy of this plan. However, this plan does not specifically address all hazards associated with the tasks and equipment in which the subcontractor has expertise. URS will obtain, and review for acceptance, subcontractor HASP(s) and related SMSs prior to

the start of any field work. Subcontractors must comply with the minimum standard established by this SSHP.

URS' oversight does not relieve subcontractors of their responsibility for effective implementation and compliance with the established plan(s) and applicable federal and state safety regulations.

URS personnel should continuously endeavor to observe subcontractors' safety performance. This endeavor should be reasonable, and include observing for hazards or unsafe practices that are both readily observable and occur in common work areas. URS is not responsible for exhaustive observation for hazards and unsafe practices. In addition to this level of observation, the SS is responsible for confirming, via observation, subcontractor compliance with their HASP(s) and applicable practices defined in this SSHP.

Health and safety related communications with URS subcontractors should be conducted as follows:

- Brief subcontractors on the provisions of this plan, and require them to sign the Employee Signoff Form.
- Request subcontractor(s) to brief the project team on the hazards and precautions related to their work.
- When apparent non-compliance/unsafe conditions or practices are observed, notify the subcontractor safety representative and require corrective action. The subcontractor is responsible for determining and implementing necessary controls and corrective actions.
- When repeat non-compliance/unsafe conditions are observed, notify the subcontractor safety representative and stop affected work until adequate corrective measures are implemented.
- When an apparent imminent danger exists, immediately remove all affected employees and subcontractors. Notify subcontractor's safety representative, and stop affected work until adequate corrective measures are implemented. Notify the SS and/or SSHO, as appropriate.
- Document all significant verbal health and safety related communications in project field logbook, daily reports, or other records.

Other Contractors/Subcontractors

Other contractors/subcontractors will be included in the SSHP as identified.

6.0 PERSONAL PROTECTIVE EQUIPMENT (PPE)

Refer to the following SMSs: 029 “Personal Protective Equipment” and 042 “Respiratory Protection”.

PPE Specifications [a]				
Task	**Level**	**Body**	**Head**	**Respirator [b]**
General Site entry Mobilization/ Demobilization Oversight of field work	D	Work clothes – no shorts; ANSI Z41–approved work boots; work gloves, high visibility reflective work vests; and leather work gloves for handling metal, loading/ unloading equipment, and any sharp objects.	ANSI Z89 - approved Hardhat [c] ANSI Z87 - approved Safety glasses with sideshields Hearing protection [d]	None required
Surveying	D or Modified D	Work clothes – no shorts; ANSI Z41- approved work boots; work gloves, and high visibility reflective work vests. Optional coveralls (Modified D) for biological hazard protection.	ANSI Z89 - approved Hardhat [c] ANSI Z87- approved Safety glasses with sideshields Hearing protection [d]	None required
Surface/ subsurface sampling (drilling/ excavation) Handling of investigation derived-waste (IDW) Confined Space Entry	D, Modified D, or C	Body: High visibility reflective work vests. For Modified D or C, Proshield-2 Tyvek® coveralls or similar (must protect for contact hazard). ANSI Z41 work boots or rubber steel-toe overboots (D or Modified D). For C, ANSI Z41 work boots with chemical protective overboots or rubber steel-toe overboots; tape Tyvek over boot top. Gloves: Surgical-style nitrile gloves and or nitrile gloves (D & Modified D). For C, surgical-style nitrile gloves (inner) and outer nitrile gloves, taped to Tyvek. Leather gloves over nitrile surgical gloves for handling equipment.	ANSI Z89 - approved Hardhat [c] ANSI Z87- approved Safety glasses with sideshields Face Shield – required for decontamination of equipment and any “aggressive” work operations where employee may be splashed/hit in the face Hearing protection [d]	None Required for D or Modified D; Full-Face Respirator with appropriate cartridges for C

PPE Specifications [a]

Task	Level	Body	Head	Respirator [b]
Sampling Unknown Product	C (Possible downgrade to Modified D)	Body: High visibility reflective work vests. Proshield-2 Tyvek® coveralls or similar (must protect for contact hazard). For C or B, ANSI Z41 work boots with chemical protective overboots or rubber steel-toe overboots; tape Tyvek over boot top. ANSI Z41 work boots or rubber steel-toe overboots (Modified D). Gloves: For C or B, surgical-style nitrile gloves (inner) and outer nitrile gloves, taped to Tyvek. Surgical-style nitrile gloves and or nitrile gloves (D & Modified D). Leather gloves over nitrile surgical gloves for handling equipment.	ANSI Z89 - approved Hardhat [c] Face Shield – required for work operations where employee may be splashed/hit in the face Hearing protection [d]	Level C (Full-Face Respirator with appropriate cartridges) or B (Full-Face Supplied Air Respirator) respiratory protection will be required at the start of unknown product sampling activities. Air monitoring will be performed and a decision to downgrade may be made pending review of the results.

Reasons for Upgrading or Downgrading Level of Protection

Upgrade[e]	Downgrade
• Request from individual performing tasks. • Change in work tasks that will increase contact or potential contact with hazardous materials. • Occurrence or likely occurrence of gas or vapor emission. • Known or suspected presence of dermal hazards. • Action levels are exceeded.	• New information indicating that situation is less hazardous than originally thought. • Change in Site conditions that decrease the hazard. • Change in work task that will reduce contact with hazardous materials.

a Modifications are as indicated. URS will provide PPE only to URS employees.
b No facial hair that would interfere with respirator fit is permitted.
c Hardhat and face-shield areas are to be determined by the SS with concurrence from SSHO.
d Ear protection should be worn when conversations cannot be held at distances of 3 feet (0.9 meter) or less without shouting.
e Performing a task that requires an upgrade to a higher level of protection (e.g., Level C to Level B) is permitted only when the PPE requirements have been approved by the RSHO, and an SS qualified at that level is present.

7.0 HEALTH AND SAFETY MONITORING

Real-time work area safety monitoring for CVOCs and radiological contaminants will be performed during this project. Details of the radiological monitoring are presented in the RPP. Work area air monitoring/screening will be performed during the drilling and trenching activities to evaluate potential exposures to CVOCs during intrusive activities. Pending a review of the results, the air monitoring may be modified.

PPE will be used to minimize employee exposure to Site contaminants. Air monitoring results will be used to verify appropriate levels of protection and to assess employee risks in any uncontrolled release. Levels of protection will be upgraded in accordance with action levels specified in this section of the SSHP.

7.1 Chlorinated Volatile Organic Compounds

7.1.1 Direct-Reading Instruments

The specific instrument used for air monitoring will be a MultiRAE Plus multiple gas monitor with photoionization detector (PID) with a 10.6 electron volt (eV) lamp for CVOCs and additional gas sensors for Lower Explosive Limit (LEL), carbon monoxide, and oxygen content. This instrument will be calibrated daily, following manufacturers' recommendations. Calibration records will include the date, type and concentration of calibration standards, instrument response, instrument type and serial number, and the name of the employee performing calibrations.

7.1.2 Frequency of Monitoring

Air monitoring will be performed at the beginning of each work shift. Background levels will be monitored upwind prior to the start of intrusive activities. Air monitoring will be repeated at least every 15 minutes in the breathing zone in the immediate work area as long as intrusive activities are in progress.

7.1.3 Action Levels

Air monitoring for CVOCs will be performed using a PID with a 10.6 eV lamp. When readings less than 1 part per million (ppm) above background in the breathing zone are observed consistently, monitoring will take place at least every 15 minutes or for every sample retrieved and Level D or Modified D protection will be utilized. When PID readings between 1 ppm and 5 ppm above background in the breathing zone are observed consistently, monitoring will be continuous and Level C protection will be utilized. Also, if PID readings exceed 1 ppm over background levels, VC monitoring (Draeger Chip Measurement System [CMS] with VC [0.30 – 10 ppm] CMS Chips) will start immediately in the breathing zone. If PID organic vapor readings exceed 5 ppm or Draeger CMS VC readings exceed 1 ppm

above background in the breathing zone, or other instrument readings necessitate work suspension, intrusive activities will be halted and the level of protection used by onsite personnel will be reassessed.

Readings greater than 10% LEL, less than 19.5% oxygen, or greater than 23.5% oxygen, will require temporary suspension of intrusive activities until the SSHP determines a safe re-entry level. The table below summarizes all air monitoring action levels and responses.

AIR MONITORING ACTION LEVEL CRITERIA

Organic Vapors (PID)	Combustibles	Oxygen	Responses
0 – 1 ppm Above Background, Sustained Reading	0 – 10% LEL	19.5 – 23.5%	• Continue intrusive activities. • Level D or Modified D protection. • Continue monitoring every 15 minutes/every sample retrieved in work area.
1 – 5 ppm Above Background, Sustained Reading; Draeger CMS VC readings <1 ppm	0 – 10% LEL	19.5 – 23.5%	• Continue intrusive activities. • Level C protection. • Monitor for VC using Draeger CMS or equivalent. • Continuous monitoring for organic vapors in the work area and at the Exclusion Zone perimeter. • Continuous monitoring for LEL and O_2 in the work area.
>5 ppm Above Background, Sustained Reading or Draeger CMS VC readings >1 ppm	>10% LEL	<19.5% or >23.5%	• Temporarily suspend intrusive activities. • Withdraw from area; shut off all engine ignition sources. • Continuous monitoring (Level C protection) for organic vapors at Exclusion Zone perimeter if organic vapor readings >5 ppm. • Continuous LEL monitoring at Exclusion Zone perimeter if LEL reading >10%. • Consult with URS PM, RSHO, SS, and SSHO and notify USACE Site Supervisor.

Notes:
Air monitoring for action levels will occur in the breathing zone.
If action levels for any one of the monitoring parameters are exceeded, the appropriate responses listed in the right hand column should be taken.

7.1.4 Recording of Air Monitoring Results

Results of direct reading instrument monitoring must be documented in a bound field notebook. Results must include the date and time of each daily instrument calibration, the date and time of each reading, location of each measurement, concentration of airborne substance measured, the type of the instrument used to perform measurements, and the name of the individual who performed the air monitoring.

7.1.5 Levels of Protection

Appropriate levels of protection are selected on the basis of the work activities and anticipated exposure levels. Level A and B protection are not anticipated to be necessary during this project. If real-time air monitoring results require Level B, all work shall cease, an addendum shall be provided prior to work commencement, and Level B equipment will be mobilized to the Site.

Level D protection will be the minimum required for the current scope of work on this project.

7.2 Radiological Monitoring

Procedures for health and safety monitoring for radiological contaminants are presented in the RPP attached as Appendix B of the APP. The RPP includes monitoring procedures, a list of monitoring instruments to be used, exposure limits, and PPE.

8.0 DECONTAMINATION

The SS and/or SSHO, and SRSO must monitor the decontamination procedures and their effectiveness. Decontamination procedures found to be ineffective will be modified by the SS. The SS must ensure that procedures are followed for the proper containerization and disposing of materials generated on the Site. Personnel will adhere to proper decontamination procedures. A decontamination area(s) will be established.

Decontamination Area Entry Procedures:

a. Enter the decontamination area through the clean room/area

b. Remove and deposit street clothes

c. Put on protective clothing before leaving the clean room/area

Decontamination Area Exit Procedures:

a. Before leaving the work area, personnel shall remove all gross contamination and debris from their protective clothing (dry decontamination)

b. Personnel shall remove their protective clothing in the equipment room/area and deposit the clothing in labeled impermeable bags or containers

c. Personnel and equipment will undergo a radiological frisk prior to leaving the controlled area

Equipment must be thoroughly decontaminated and undergo a radiological frisk before being removed through the clean room/area. If equipment exits the clean room with visible contamination, the decontamination area (clean room/area) must be thoroughly cleaned before any entries/exits to/from the work area will be allowed. The SS, SSHO, and SRSO will verify that potential chemical/radiological contamination does not migrate from the decontamination area. The SS and/or SSHO, and SRSO will verify that all personnel do not leave the work area(s) without proceeding through a proper decontamination.

8.1 Decontamination Specifications

Decontamination specifications are listed in the following table. The focus will be on dry decontamination to remove potential chemical/radiological contamination, without generating unnecessary liquid decontamination wastes that will require offsite disposal. Wet decontamination procedures will be utilized as necessary.

Decontamination Specifications		
Personnel	**Sample Equipment**	**Heavy Equipment**
• Dry decontamination • Boot wash/rinse, if necessary • Glove wash/rinse, if necessary • Outer-glove removal, if required • Suit (Tyvek) removal, if required • Inner-glove removal, if required • Respirator removal, if required • Hand wash/rinse • Face wash/rinse • Segregate and contain wastes for offsite disposal	• Dry decontamination • Wash/rinse equipment, as necessary • Solvent-rinse equipment, if required • Segregate and contain wastes for offsite disposal	• Dry decontamination • Power wash/steam clean, if necessary • Segregate and contain wastes for offsite disposal

8.2 Diagram of Personnel-Decontamination Line

No eating, drinking, or smoking is permitted in contaminated areas or in the exclusion or decontamination zones. The SS will establish areas for eating, drinking, and smoking. Contact lenses are not permitted in exclusion or decontamination zones.

The following figure illustrates a conceptual establishment of work zones, including the decontamination line. Work zones are to be modified by the SS to accommodate task-specific requirements.

8.3 Spill-Containment and Reporting Procedures

All spills will be reported to the SS, who in turn will report to the SSHO. Sorbent material will be maintained in the support zone. Incidental spills will be contained with sorbent and disposed of properly. Spills that are not completely contained or recovered and result in the discharge of a hazardous substance to the environment will be reported immediately to the SS, who will make appropriate notifications (e.g., URS PM, USACE, etc.).

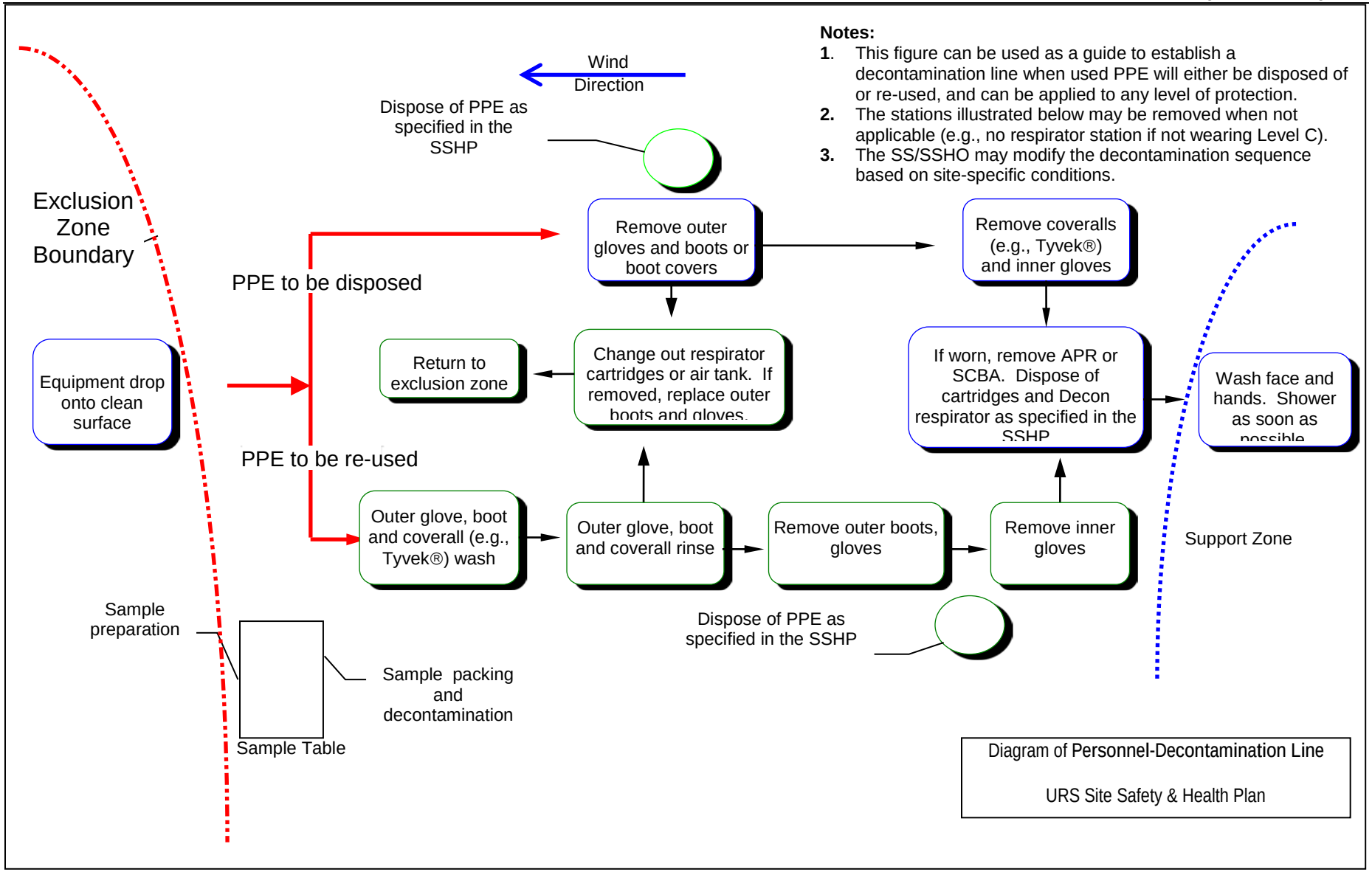
Notes:
1. This figure can be used as a guide to establish a decontamination line when used PPE will either be disposed of or re-used, and can be applied to any level of protection.
2. The stations illustrated below may be removed when not applicable (e.g., no respirator station if not wearing Level C).
3. The SS/SSHO may modify the decontamination sequence based on site-specific conditions.
Wind Direction
Dispose of PPE as specified in the SSHP
Exclusion Zone Boundary
PPE to be disposed
Remove outer gloves and boots or boot covers
Remove coveralls (e.g., Tyvek®) and inner gloves
Equipment drop onto clean surface
Return to exclusion zone
Change out respirator cartridges or air tank. If removed, replace outer boots and gloves.
If worn, remove APR or SCBA. Dispose of cartridges and Decon respirator as specified in the SSHP
Wash face and hands. Shower as soon as possible
PPE to be re-used
Outer glove, boot and coverall (e.g., Tyvek®) wash
Outer glove, boot and coverall rinse
Remove outer boots, gloves
Remove inner gloves
Support Zone
Sample preparation
Dispose of PPE as specified in the SSHP
Sample packing and decontamination
Sample Table
Diagram of Personnel-Decontamination Line
URS Site Safety & Health Plan

9.0 SITE-CONTROL PLAN

9.1 Site-Control Procedures

Refer to SMS 002 "Hazard Communication".

- The SSHO will conduct a Site safety briefing with personnel (see below) before each shift, change of field activity, and/or as tasks and Site conditions change.
- Topics for briefing on Site safety: general discussion of SSHP, site-specific hazards, locations of work zones, PPE requirements, equipment, special procedures, and emergencies.
- The SS records attendance at safety briefings in a logbook and documents the topics discussed.
- If required, post the OSHA job-site poster in a central and conspicuous location in accordance with OSHA requirements.
- Establish support, decontamination, and exclusion zones as necessary. Delineate zones with flagging tape or other delineators, as appropriate. Support zone should be upwind of the work area. Use access control at entry and exit from each work zone.
- Establish on-site communication consisting of the following:
  - Line-of-sight and hand signals
  - Air horn
  - Two-way radio and/or cellular telephone
- Establish off-site communication.
- Establish and maintain the "buddy system".
- Initial air monitoring is conducted by the SS, or designee, in appropriate level of protection.
- The SS and/or SSHO are to conduct periodic inspections of work practices to determine the effectiveness of this plan. Deficiencies are to be recorded in the logbooks, discussed with the activity supervisor, and appropriate corrections implemented.

9.2 HAZWOPER Compliance

Refer to the following SMSs: 002 "Hazard Communication"; 017 "Hazardous Waste Operations"; and 029 "Personal Protective Equipment".

Certain parts of the Site work are covered by state or federal HAZWOPER standards and therefore require training and medical monitoring. Medical monitoring/surveillance requirements are described in URS SMS 017 "Hazardous Waste Operations". Potentially, HAZWOPER tasks might occur consecutively or concurrently with respect to non-HAZWOPER tasks. Non-HAZWOPER-trained personnel (typically support staff) must be trained in accordance with applicable state and federal OSHA requirements.

- In certain occurrences (e.g., chemical or fuel spill), air sampling, in addition to real-time monitoring, must confirm that there is no exposure to gases or vapors in the work area before

non-HAZWOPER-trained personnel are allowed on the Site and/or while non-HAZWOPER-trained staff is working in proximity to HAZWOPER activities. Other data (e.g., soil) may be required to document that there is no potential for exposure. The SS and the SSHO must approve the interpretation of these data.

- When non-HAZWOPER-trained personnel are at risk of exposure, the SS must post the exclusion zone and inform non-HAZWOPER-trained personnel of the following:
  - Nature of the existing contamination and its locations
  - Limitations of their access
  - Emergency action plan for the Site
- When exposure is possible, non-HAZWOPER-trained personnel must be removed from the Site until it can be demonstrated that there is no longer a potential for exposure to health and safety hazards.
- Non-HAZWOPER-trained personnel, or Site visitors, may not enter the permitted areas of the Site without an escort from the SS and/or SSHO.

10.0 EMERGENCY PLAN

Refer to SMS 003 "Emergency Preparedness Plans". This section outlines the Plan to be followed in case of a Site-wide emergency.

10.1 Pre-Emergency Planning

The SS performs the applicable pre-emergency planning tasks before starting field activities and coordinates emergency response with URS on-site parties, and local emergency service providers (as appropriate). See Attachment 2 of the URS APP.

- Review the facility emergency assembly location(s) (e.g., Building 429) for each major operational area with the supervisors of work tasks.
- Determine what on-site communication equipment is available (e.g., two-way radio, cell phones).
- Determine what off-site communication equipment is needed and its location (e.g., nearest telephone, cell phone).
- Confirm and post emergency telephone numbers, evacuation routes, assembly areas, and route to hospital; communicate the information to on-site personnel.
- Field trailers: Post "Exit" signs above exit doors, and post "Fire Extinguisher" signs above locations of extinguishers. Keep areas near exits and extinguishers clear.
- Establish a clear and simple protocol to communicate if, or when, there is an emergency (e.g., shouting "Mayday on site" or "Emergency on site" on the radio).
- Inform emergency room supervisors and the chief of the local emergency response team(s) that site work has started, ambulance access points, and the potential types of Site emergencies.
- Designate one vehicle as the emergency vehicle; place hospital directions and map inside; keep keys in ignition during field activities.
- Check Site emergency equipment, supplies, and potable water are present and/or functional.
- Communicate emergency procedures to the workers for personnel injury, exposures, fires, explosions, and releases.
- Supervisors are to rehearse the emergency response plan before Site activities begin, including a "practice run" by driving the route to the hospital.
- Brief new workers on the emergency response plan.
- The SS and SSHO will evaluate emergency response actions and initiate appropriate follow-up actions.
- Throughout the project, review changes in Site conditions, on-site operations, and personnel in relation to emergency response procedures.

10.2 Site Communications

- Post emergency numbers near the Site telephones and in all field vehicles.

- Ensure that personnel work under a "buddy" system.
- Furnish selected personnel (typically supervisors) with two-way radios.
- Each major subcontractor shall assign a person who shall report directly to the URS SSHO. This person shall be responsible for keeping safety equipment and facilities clean and properly equipped and maintained for their personnel and for their subcontractors. This person may, most likely, perform other duties for the contractor, but the first priority shall be maintenance of protective equipment and the personnel decontamination area.

10.3 Emergency Equipment and Supplies

The locations of emergency equipment will be marked on the Site map.

Emergency Equipment and Supplies	Location
Fire extinguishers (ABC type dry chemical)	URS Field Office (Building 429)/Site Vehicles/Heavy Equipment/fuel or flammable materials storage areas
First aid kits	URS Field Office/Site Vehicles
Portable Emergency Eye Wash Bottles	URS Field Office/Field Vehicles
Hand held Emergency Air Horns	Supervisor for each major activity
Blood borne-pathogen kit	URS Field Office
Stretcher	URS Field Office
Blankets and towels	URS Field Office
Additional equipment (specify):	

At a minimum, two (2) FA-CPR certified personnel shall be on the Site when work activities are in progress. These personnel are expected to perform other duties, but shall be immediately available to render first aid when needed.

10.4 Incident Response

In fires, explosions, imminent danger situations or major chemical releases (spills), actions to be taken include the following:

- Shut down operations and evacuate the immediate work area.
- Notify appropriate response personnel.
- Account for personnel at the designated assembly area(s).
- Assess the need for Site evacuation, and evacuate the Site as warranted.

Instead of implementing a work area evacuation, note that small fires or spills posing minimal safety or health hazards may be controlled.

10.5 Emergency Medical Treatment

The procedures listed below may also be applied to non-emergency incidents.

Injuries and illnesses (including overexposure to chemicals or fuels) must be reported to the URS Occupational Health Manager, SS and SSHO. If there is doubt about whether medical treatment is necessary, or if the injured person is reluctant to accept medical treatment, contact the URS SS and SSHO.

- If appropriate, notify emergency response authorities (e.g., 911).
- The crew supervisor, or the URS SS, and/or the SSHO will assume charge during a medical emergency until the ambulance arrives or until the injured person is admitted to the emergency room.
- Secure the cause of the injury, if possible, to prevent further injury and/or injury to others. **REMEMBER: lifesaving, first aid and/or medical treatment take priority over everything else**.
- Initiate first aid and CPR where feasible.
- Get medical attention immediately.
- Perform decontamination where appropriate and feasible.
- Make certain that the injured person is accompanied to the emergency room, preferably by his/her crew supervisor.
- When communicating with the emergency medical professional, state your name and telephone number, the name of the injured person, the extent of the injury or exposure (if known), what caused the injury (if known), and the on-site location where the injury occurred.
- Report incident as outlined in this SSHP.

10.6 Evacuation

- Evacuation routes and assembly areas (and alternative routes and assembly areas) are required to be developed.
- Evacuation route(s) and assembly area(s) will be designated by the SS based on information from the various crew supervisors before work begins. The designated evacuation routes and assembly areas will be communicated to personnel at each major work area.
- Immediately upon hearing the emergency signal for evacuation, all personnel will shut down their equipment (if any), and assemble at the pre-determined location for their work area.
- The SS is to confirm all of their personnel are present and accounted for in their assembly area before performing any other task.
- The SS, SSHO, and/or a “buddy” will remain on the Site after the Site has been evacuated (if safe) to assist local responders and advise them of the nature and location of the incident.
- A designated person will account for personnel at alternate assembly area(s) (if any established).
- The SS and SSHO will document the incident as soon as possible after it occurs and submit a report to the PM. **URS must notify the USACE Contracting Office as soon as practicable but no later than 4 hours after an accident/incident.**

- If an immediate evacuation is necessary, individuals working in controlled areas should exit the area without frisking (personal radiological screening); however, they should restrict their activities to limit the potential spread of contamination. If practical, a second set of PPE can be donned for this purpose.

10.7 Evacuation Signals

Non-verbal signals are often necessary to communicate in emergency situations. The project will use the signal methods listed in this table during evacuations.

Signal	Meaning
Grasping throat with hand	Emergency-help me.
Thumbs up	OK; understood.
Grasping buddy's wrist	Leave area now.
Continuous sounding of horn	Emergency; leave site now.

10.8 Incident Notification and Reporting

- All personnel are to immediately notify the SS and/or SSHO (see Section 5.0 for contact numbers) in the event of an incident, serious illness, fire, spill/release, accident, injury, near loss, or loss. The SS and/or SSHO will notify the PM. The PM will report all accidents as soon as possible but not more than 4 hours afterwards to the USACE CO/COR.
- For URS work-related injuries or illnesses, the injury/illness report (SMS 049) and the USACE Accident Investigation Report (APP Attachment #2A) must be completed within 24 hours of the incident.

10.9 Lines of Authority

The lines of authority are as follow:

- Site personnel are authorized to report to the SS and SSHO any health and safety and/or emergency issue/incident. They are also authorized to stop work in cases where the individual/personnel safety is endangered.
- The SS, SSHO, and SSRO are authorized to stop work for any health and safety and/or emergency issue/incident. Such action is required to be reported to the PM.
- The PM is authorized to stop work for any health and safety or emergency issue/incident, as well as, issues related to schedule, cost, and/or quality of work product.
- The direct line of authority is as follows:
    - ► PM
    - ► SS

- SSHO
- SRSO
- Site personnel

11.0 SECURITY PLAN

The purpose of this security plan is to provide security to protect the NFSS work Site from unauthorized entry, vandalism, and theft. A security program will be initiated at the time of startup of major site activities and will be maintained throughout operations at the facility.

11.1 Security Components and Required Actions

- Allow entrance only to authorized persons/vehicles with proper identification.
- Maintain a log of workers and visitors. Include date, name, address, company employed by, company/person visited, time in and time out for each person, and record of deliveries and security incidents.
- If unauthorized personnel are observed on the Site, notify the SS. The SS will contact USACE on-Site personnel, who may contact the appropriate law enforcement officials if the situation requires assistance or legal action.
- All visitors will be required to complete basic Site safety and orientation training prior to being escorted into secured areas. Never allow visitors to enter the area secured by the Site security fence without the express permission of USACE.
- Work site entry will be controlled by locking gates during non-working hours and limiting the distribution of keys/remotes for the access gates.
- Entrance to the work site will be through the NFSS main access gate, which will be used for all Site entries including delivery of materials.
- All work Site personnel including URS employees, subcontractors, delivery persons, regulators, and visitors must sign in at Building 429 immediately after entering the main Site and sign out upon leaving.
- Visitors to the work site will always be escorted and will be required to adhere to the requirements of the SSHP.

11.2 Entrance and Traffic Control Procedures

- Pause near the gate after entering or exiting the NFSS main access gate to ensure that the gate automatically closes. If the gate does not automatically close, remain near the gate and contact the SS or USACE.
- Entrance and exit points will be communicated for the exclusion zone when the transition zone facilities are established and the field investigation activities are ready to start.
- Access to the Site/work areas will be denied for persons who do not have proper identification and/or training.
- Each subcontractor is to maintain a list of persons authorized for Site/work area entry. The list will be available on request to the SS.

- Require that all personnel, including regulators, URS employees, lower-tier contractors, suppliers, vendors and visitors having access to the work areas and trailer compound area sign in and sign out at Building 429.
- Control vehicle traffic on and through the work areas to provide safe and efficient operations.
- Restrict vehicle access to exclusion zones to authorized vehicles only.
- Personal vehicles will not be allowed to enter the exclusion zones.
- Install barriers and signs to regulate vehicular traffic, as necessary.
- All employees are instructed to immediately report suspected security breaches to the SS and/or USACE.

12.0 MEDICAL MONITORING

The medical monitoring requirement for HAZWOPER exposures at the NFSS is presented in URS SMS 024 “Medical Screening and Surveillance”.

13.0 EMPLOYEE SIGN-OFF FORM

URS GROUP, INC.

EMPLOYEE SIGNOFF FORM

Site Safety and Health Plan

The URS project employees and URS subcontractors (and lower tier subcontractors) listed below have been provided with a copy of this SSHP, have read and understood it, and agree to abide by its provisions (including drug testing and discipline protocols).

Project Name: Niagara Falls Storage Site Project **Project Number:**

EMPLOYEE NAME (Please print)	**EMPLOYEE SIGNATURE**	**COMPANY**	**DATE**

ATTACHMENT A
SAFETY
MANAGEMENT
STANDARDS

Safety Management Standards

SMS 002	Hazard Communication
SMS 003	Emergency Preparedness Plans
SMS 010	Confined Space Entry
SMS 012	Electrical Safety
SMS 013	Excavation
SMS 014	Fire Protection and Prevention
SMS 015	Flammable and Combustible Liquids and Gases
SMS 016	Hand Tools and Portable Equipment
SMS 017	Hazardous Waste Operations
SMS 018	Heat Stress
SMS 019	Heavy Equipment Operations
SMS 020	Hot Work
SMS 021	Housekeeping
SMS 023	Lockout and Tagout Safety
SMS 024	Medical Screening & Surveillance
SMS 026	Noise and Hearing Conservation
SMS 028	Ladders
SMS 029	Personal Protective Equipment
SMS 034	Utility Clearance and Isolation
SMS 040	Fall Protection
SMS 042	Respiratory Protection
SMS 047	Biological Hazards
SMS 048	Hazardous Materials/ Dangerous Goods Shipping
SMS 049	Injury/Illness/Incident Reporting
SMS 051	Bloodborne Pathogens
SMS 052	Radiation Protection Program
SMS 056	Drilling Safety Guidelines
SMS 057	Vehicle Safety Program
SMS 059	Cold Stress
SMS 066	Incident Investigation
SMS 069	Manual Material Handling
SMS 070	Powered Industrial Trucks

URS SAFETY MANAGEMENT STANDARD

Hazard Communication (Worker Right-to-Know)

1. Applicability

This procedure applies to the operations of URS Corporation and its subsidiary companies.

2. Purpose and Scope

The purpose of this Hazard Communication standard (also know as worker right-to-know program) is to provide URS personnel with information and training about safety and health hazards associated with the chemicals they may encounter in the workplace. This procedure describes how chemical safety hazards are communicated to URS personnel and how information is to be provided to employees of other companies working at the location. The requirements include steps to acquire this information, maintain the information, and train personnel in the hazard communication program.

3. Procedures

The associated implementing regional procedures for this standard are included as attachments:

SMS 002 NA – North America; Australia / New Zealand

SMS 002 INT – International Operations (including Europe, Asia, South America and Africa)

URS SAFETY MANAGEMENT STANDARD

Hazard Communication (Worker Right-to-Know)

1. Applicability

This standard applies to the operations of URS Corporation and its subsidiary companies.

This standard is not applicable to chemical laboratory operations that are covered under 29 Code of Federal Regulations (CFR) 1910.1450 (Occupational Exposure to Chemicals in Laboratories).

2. Purpose and Scope

The purpose of this Hazard Communication standard (also know as worker right-to-know program) is to provide URS personnel with information and training about safety and health hazards associated with the chemicals they may encounter in the workplace. This procedure describes how chemical safety hazards are communicated to URS personnel and how information is to be provided to employees of other companies working at the location. The requirements include steps to acquire this information, maintain the information, and train personnel in the hazard communication program.

3. Implementation

Implementation of this standard is the responsibility of the URS manager who directs activities at the facility, site, or project location. For office locations and large projects, this program may be incorporated into the general site orientation and training program or administered by project management.

Note: Manufacturers are permitted to ship chemicals under existing classification systems until December of 2015. As such, many of the requirements listed here may be gradually phased in by the manufacturers until that time. Where noted within the SMS, deviations from the existing procedure are allowed until December 2015 or until otherwise noted by URS.

4. Requirements

A. Hazardous Material Inventory

Maintain a hazardous material inventory that lists all of the hazardous materials used at each workplace (i.e., office, field location). Use chemical identifiers consistent with and referenced on the applicable safety data sheet (SDS). (Note that the terms material safety data sheet (MSDS) and SDS may be used interchangeably until December 2015.)

B. Site-Specific Written Program

A site-specific written program may be prepared as a stand-alone document or included within a site-specific health and safety plan. The program must cover hazardous materials in all physical forms (liquids, solids, gases, vapors, fumes, and mists), regardless of whether they are "contained."

C. Safety Data Sheets (SDSs)

1. The safety representative will obtain an SDS for each chemical before it is used. SDSs will generally be received by the person ordering the product. SDSs for products frequently used should be kept on file because additional copies may not be included in repeat shipments.

2. The safety representative will review each SDS when it is received to evaluate whether the information is complete and to determine whether existing protective measures are adequate.

3. Each office or project location will assign a responsible person or department to maintain a collection of all applicable and relevant SDSs in an area that is accessible by all employees at all times. An electronic database is an acceptable method of maintaining the SDSs.

4. The assigned person or department will replace SDSs when updated sheets are received and will communicate any significant changes to those who work with the chemical.

5. SDSs are required for all hazardous materials brought on site by project personnel.

6. General consumer products to be used for their specific purpose, as well as food, drugs, cosmetics, and tobacco products brought into the workplace for employee consumption, are exempt, as are supplies in the first aid kit, such as isopropyl alcohol and antibacterial wipes.

7. Subcontractors bringing hazardous materials onto a site or project must submit SDSs to the safety representative. The safety representative may restrict the use of certain hazardous materials on a site or project due to occupational health risk, hazardous

physical properties of the material, or potential employee sensitivity to odor or irritating properties of the material.

D. Labels

Unless each container has appropriate labeling, label all chemical containers with the following information:

1. Product identifiers (codes or product names matching those on the SDS).

2. Signal word (key words used to emphasize hazards and indicate the relative severity of the hazard).

3. Appropriate hazard statements (standard phrases assigned to a hazard class and category which describe the nature of the hazard).

4. Pictograms (graphic elements intended to convey specific information about the hazard).

5. Precautionary statements (supplement the hazard statements by briefly providing measures to be taken to minimize or prevent adverse effects from the hazard).

6. Name, address, and telephone number of the chemical manufacturer, importer, or other responsible party.

Labels on incoming containers of hazardous materials will not be removed or defaced.

Labels are also required when a hazardous substance is transferred from a primary container to a secondary container. Labels on secondary containers must indicate the product identifier, as well as words, pictures, or symbols, or combination thereof, which will provide general information about the hazards of the chemical, including the physical and health hazards.

Note that until December 2015, manufacturers will be in a transitional period as they gradually meet the requirements of the Globally Harmonized System of Classification and Labeling of Chemicals (GHS). As such, the labels on incoming containers from the manufacturer are only required to indicate product names and identities of the hazardous chemicals, appropriate hazard warnings, and the name and address of the manufacturer, importer, or other responsible party, rather than the items

listed above in D.1 through D.6. Labels may incorporate words, pictures, symbols, or combinations thereof to ensure the appropriate information is provided to the end user. Examples of acceptable labeling systems include the National Fire Protection Association (NFPA) Diamond, the Hazardous Materials Identification System (HMIS), the Chemical Hazard Identification and Training (CHIT) system, or similar.

E. Hazardous Non-routine Tasks

Periodically, employees are required to perform hazardous non-routine tasks. Prior to starting work on such projects, each employee must be provided with information about hazards to which they may be exposed, as follows:

1. Specific chemical and physical hazards.

2. Protective/safety measures that must be taken.

3. Measures that have been taken to lessen the hazards, including ventilation, respirators, presence of another employee, and emergency procedures.

F. Informing Contractors/Subcontractors

Provide other contractors/subcontractors working in the same area with the following information on chemicals used by or provided to URS personnel:

1. Identification of hazardous chemicals to which they may be exposed while on the jobsite.

2. Precautionary measures the contractors/subcontractors need to take to protect their employees during both normal operating conditions and foreseeable emergencies.

3. Location of SDSs.

4. Applicable labeling systems in use in the workplace.

G. Training

1. Provide training to all employees who have the potential to be exposed to hazardous materials, on the following schedule:

    a. At the time of the initial task assignment,

b. Whenever new chemicals are introduced into the workplace, or

c. More frequently where required by site-specific conditions or client-specific requirements.

2. This training will include the following:

a. Applicable regulatory requirements.

b. Any operations in the work area where hazardous chemicals are present.

c. Location of the program, inventory, and SDS.

d. Site-specific chemicals used and their hazards (chemical, physical, and health), including:

1. General characteristics of chemicals

2. Signs and symptoms of exposure

e. How to detect the presence or release of chemicals including the location, types, and usage of any portable and fixed monitoring or detection equipment and their associated alarms, where applicable.

f. Safe work practices and methods employees can take to protect themselves from chemical hazards, including work practices, emergency procedures, and the use of personal protective equipment.

g. How to read an SDS.

h. Site- or project-specific information on hazard warnings and labels in use at the location, if applicable.

i. Site-specific evacuation and rescue procedures in the event of chemical release, including the location of staging areas and personnel accounting procedures.

3. Document the training.

4. Arrange provisions for training in the language of the user. International Chemical Safety Cards (see Section 6, ILO) may be

used in conjunction with SDS information to provide non–English-language information. SDSs are required to be on site, but there is no requirement for the SDSs to be in a language other than English.

5. Documentation Summary

The following documentation will be maintained in the project file:

A. Hazardous Material Inventory.

B. SDSs.

C. Training records.

D. Contractor/Subcontractor notifications.

6. Resources

A. U.S. Occupational Safety and Health Administration (OSHA) General Industry Standards – Hazard Communication – 29 Code of Federal Regulations (CFR) 1910.1200

B. U.S. OSHA Construction Standards – Hazard Communication – 29 CFR 1926.59

C. Mine Safety and Health Administration – Hazard Communication – 30 CFR 47

D. OSHA Administration Technical Links – http://www.osha.gov/dsg/hazcom/index.html

E. International Labour Organization (ILO) – International Chemical Safety Cards (information about 1613 chemicals in 18 languages). http://www.ilo.org/public/english/protection/safework/cis/products/icsc/index.htm

F. Agency for Toxic Substances and Disease Registry (ATSDR) – Tox FAQs and Tox FAQs en Espanol, 2003. http://www.atsdr.cdc.gov/toxfaqs/index.asp

G. United Nations – Globally Harmonized System of Classification and Labeling of Chemicals (GHS). http://www.unece.org/trans/danger/publi/ghs/ghs_rev04/04files_e.html

7. Supplemental Information

A. Hazard Communication Program – Template

B. Hazard Communication Employee Training Program

HAZARD COMMUNICATION PROGRAM

Table of Contents

A. Purpose
B. Identification of Hazardous Substances
C. Container Labeling
D. Safety Data Sheets (SDS)
E. Employee Training and Information
F. Non-Routine Task Training
G. Access to Information by Other Employees

Appendices

I. Hazard Communication Checklist
II. Potentially Hazardous Substances
III. List of Jobsite Hazardous Substances
IV. Sample Letter to Suppliers to Obtain SDS

A. PURPOSE

A-1 To protect the health and safety of our employees, URS Corporation has developed this Hazard Communication program.

1. As an organization we intend to provide information about chemical hazards and other hazardous substances, and the control of hazards via our comprehensive Hazard Communication Program, which includes container labeling, Safety Data Sheets (SDS), and training.

2. This written Hazard Communication Program applies to all operations that MAY expose employees to hazardous substances because of normal work conditions (including non-routine tasks) or as the result of a reasonably foreseeable emergency.

3. This written Hazard Communication Program is available, upon request, to employees, their designated representatives and to appropriate representatives of state and/or federal safety and health agencies.

A-2 Scope

This program is part of URS Corporation's comprehensive health and safety program and shall be applied in conjunction with that overall program.

A-3 Responsibilities

1. The Project Manager is responsible for implementing and ensuring compliance with this written hazard communication program. The Hazard Communication checklist found in Appendix I is provided to assist the Project Manager in carrying out this responsibility.

2. The designated Project Safety Representative is responsible for coordinating and administering the program, in developing and assisting in the presentation of training materials and in providing technical assistance to project supervision.

3. Each Project Supervisor shall become familiar with the hazard communication procedures and shall supervise the application of these procedures to tasks for which they are responsible.

4. The Safety Manager is the designated safety professional for the project or office location and is responsible for providing technical assistance to the Project Supervisor or Safety Representative to implement the hazard communication program.

B. IDENTIFICATION OF HAZARDOUS SUBSTANCES

B-1 "Hazardous Substances" are materials or mixtures that are or have physical or health hazards (See Appendix II for examples of potentially hazardous materials).

B-2 "Exposure" is any situation arising from work conditions where an employee may ingest, inhale, absorb or otherwise come in contact with a hazardous substance.

B-3 An inventory of all hazardous substances to which employees may be exposed on this jobsite, as well as an accompanying SDS, shall be maintained in the project office (see Appendix III).

C. CONTAINER LABELING

C-1 When hazardous substances are received, the Project Safety Representative shall examine the containers to determine if the labels provide the following information (primary containers):

1. A product identifier;
2. Signal words;
3. Appropriate hazard statements;
4. Pictograms;
5. Precautionary statements; and
3. The name, address, and telephone number of the chemical manufacturer, importer, or other responsible party.

C-2 When hazardous substances are transferred into portable or secondary containers, the responsible Project Supervisor shall ensure that these containers are labeled with an extra copy of the manufacturer's label or with a printed label that includes the information above.

EXCEPTION: When an employee transfers a hazardous substance into a portable container for his/her own immediate use, the portable container need not be labeled.

C-3 Each Project Supervisor shall ensure that the labels on containers of hazardous substances are not removed or defaced, unless the containers are immediately relabeled with the information in C-1 above. The labels shall be written legibly in English. However, for non-English speaking employees information may be presented in their native language as well.

C-4 Containers without complete labels or with defaced labels will not be used on the job.

C-5 The Project Supervisor or Safety Representative shall review the jobsite labeling procedure at least quarterly and update as required.

D. SAFETY DATA SHEETS (SDS)

D-1 Safety Data Sheets (SDSs) are documents that supply information about a particular hazardous substance or mixture. Manufacturers are required to provide SDSs when the hazardous substances are sold to distributors or purchasers. In most cases, SDSs are sent to the purchaser of the project (e.g., the procurement department or Project Supervisor), not the safety department.

D-2 The Safety Manager / Project Safety Representative or Project Supervisor in coordination with the purchasing agent or project business manager, will be responsible for obtaining and maintaining the master sets of SDSs and other information on all hazardous substances used (see sample letter in Appendix IV).

D-3 The Project Safety Representative will review SDSs for completeness. If an SDS is missing or obviously incomplete, a new SDS will be requested from the manufacturer. In some cases, SDSs may be obtained on-line through the manufacturer's web site. The Project Safety Representative should review products for highly toxic or dangerous constituents prior to use and consult with the Safety Manager for any items considered hazardous or toxic.

D-4 SDSs are available to all employees in their work area for review during each work shift. If SDSs are not available or new hazardous substance(s) in use do not have SDSs, contact the Project Safety Representative immediately. Additional information such as chemical safety cards and the NIOSH Pocket Guide to Chemical Hazards may be used for additional information.

D-5 Project Supervisors shall be alert to other employees (such as subcontractors) whose work on the jobsite may expose employees to additional hazardous substances. When it appears such exposure will occur, SDSs for the substances must be obtained.

D-6 When doing renovation or remodeling work, the Project Supervisor shall coordinate SDSs of hazardous materials used by contractors. Contractors bringing hazardous materials on to a site or project must submit SDSs to the Project Supervisor. The Project Supervisor should consult wit the Safety Manager if there are any questions regarding hazardous constituents of products.

E. EMPLOYEE TRAINING AND INFORMATION

E-1 Initial Orientation

Before starting work, each new employee must attend a health and safety orientation. URS Corporation's on-line training program on Hazard Communication may be used as a component of the initial training but employees still require site specific information on hazards of chemicals in use, site specific spill and emergency procedures, and site specific labeling systems as described below.

E-2 Training shall be provided before employees are assigned duties that may cause exposure to hazardous substances. Training shall also be given when new hazardous substances are introduced into the work area or when an SDS is changed. In general, this training shall include:

1. Information on which hazardous substances are in the work area.
2. How to read and interpret information on SDSs and labels.
3. Any physical or health hazards associated with the use of a hazardous substance or mixture being used in the work area.
4. Proper precautions for handling hazardous substances, including specific procedures the company has implemented to protect workers from exposure such as personal protective equipment and work practices.
5. Proper procedures for reporting of releases or threatened releases of hazardous substances.
6. Emergency procedures for spills, fires, disposal and first aid.
7. The methods and observations that can be used to detect the presence of a hazardous substance in the work place (odor, visual appearance or monitoring).
8. The right of employees, their physicians or their collective bargaining agents to receive information on hazardous substances to which they may be exposed.
9. The right against discharge or discrimination due to an employee's exercise of the rights afforded by law.
10. The details of this written Hazard Communication Program; the availability and location of this written Hazard Communication Program and of SDSs or other information.

E-3 Hazard communication training must be documented.

E-4 Additional training shall be provided as needed during the weekly safety and health training ("toolbox") meetings in order to emphasize the safe handling, use and storage of onsite hazardous substances.

F. NON-ROUTINE TASK TRAINING

F-1 When employees are assigned to a non-routine task that may expose them to a hazardous substance for which they have not been trained, they shall be trained in the manner required by Section E.

F-2 Some examples of non-routine tasks are:

- Confined space entry.
- Tank cleaning.
- Repair of pipes or tanks containing hazardous substances.

Prior to starting work on such projects, each affected employee will be given information about the hazardous substances he or she may encounter during such activity. This information will include specific chemical hazards, protective and safety measures the employee can use, and steps the jobsite is using to reduce the hazards, including ventilation, respirators, presence of another employee and emergency procedures including site specific warnings, evacuation routes, and assembly points.

G. ACCESS TO INFORMATION BY OTHER EMPLOYERS

G-1 It is the responsibility of the Project Safety Representative or Project Supervisor to provide contractors and subcontractors with information about hazardous chemicals their employees may be exposed to on a jobsite and suggested precautions for the contractor's employees to follow to avoid exposure to hazardous conditions.

G-2 Contractors and subcontractors on the job site with potential exposure or risk will be contacted before work is started, to gather and distribute information concerning any chemical hazard that they may bring or be exposed to, in areas that are under URS Corporation control.

APPENDIX I

HAZARD COMMUNICATION CHECKLIST

_____1. Have we prepared a list of all the hazardous substances in our workplace?

_____2. Are we prepared to update our hazardous substance list?

_____3. Have we obtained or developed a safety data sheet for each hazardous substance we use?

_____4. Have we developed a system to ensure that all incoming hazardous substances are checked for proper labels and data sheets?

_____5. Do we have procedures to ensure proper labeling or warning signs for containers that hold hazardous substances?

_____6. Are our employees aware of the specific information and training requirements of the Hazard Communication Standard?

_____7. Are our employees familiar with the different types of chemicals and the hazards associated with them?

_____8. Have our employees been informed of the hazards associated with performing non-routine tasks?

_____9. Do our employees understand how to detect the presence or release of hazardous substances in the workplace?

_____10. Are employees trained about proper work practices and personal protective equipment in relation to the hazardous substances in their work area?

_____11. Does our training program provide information on appropriate first aid, emergency procedures and the likely symptoms of overexposure?

_____12. Does our training program include an explanation of labels and warnings that are used in each work area?

_____13. Does the training describe where to obtain safety data sheets and how employees may use them?

_____14. Have we worked out a system to ensure that new employees are trained before beginning work?

_____15. Have we developed a system to identify new hazardous substances before they are introduced into a work area?

_____16. Do we have a system for informing employees when we learn of new hazards associated with a chemical we use?

_____17. Have the employees been advised of the consequences for failure to follow established procedures?

_____18. Do we have a system to ensure subcontractors are sharing information with one another, concerning the hazardous substances they have brought to the site?

APPENDIX II

EXAMPLES OF POTENTIALLY HAZARDOUS MATERIALS THAT MAY BE FOUND ON URS CORPORATION CONSTRUCTION/GENERAL INDUSTRY PROJECTS

Acetone
Acetylene gas
Adhesives
Aluminum etching agent
Ammonia
Anti-freeze
Arsenic compounds
Asbestos
Asphalt (Petroleum) fumes
Battery Fluids
Benzene (and derivatives)
Bleaching agents
Carbon black
Carbon monoxide (in cylinders)
Caulking, sealant agents
Caustic soda (sodium hydroxide)
Chromate salts
Chromium
Cleaners
Cleaning agents
Coal tar pitch
Coal tar epoxy
Coatings
Cobalt
Concrete curing compounds
Creosol
Cutting oil (oil mist)
De-emulsifier for oil
Diesel gas, diesel oil
Drywall
Dusts (brick, cement block)
Enamel
Etching agents
Ethyl alcohol
Fiberglass, mineral wool
Foam insulation
Freon 20, R20 (and others)
Gasoline (petrol, ethyl)
Glues
Graphite
Greases
Helium (in cylinders)
Hydraulic brake fluid
Hydrochloric acid
Hydrogen (in cylinders)
Inks
Insulations
Iron
Kerosene
Lead
Lime (calcium oxide)
Limestone
Lubricating oils
Lye (sodium hydroxide, potassium hydroxide)
Magnesium
Metals (aluminum, nickel, copper, zinc, cadmium, iron, etc.)
Methanol (methyl alcohol)
Methyl ethyl ketone (2-butanone)
Motor oil additives
Muriatic acid (hydrochloric acid)
Naptha (coal tar)
Nitroglycerin
Oxalic acid
Ozone
Paint remover
Paint stripper
Paints/lacquers
Particle board
Pentachlorophenol
Pesticides
Photographic developers and fixers
Photogravure ink (copy machine)
Plastics
Polishes for metal floors
Propanol
Putty Resins, epoxy/synthetics
Sealers
Shellac
Solder, flux (zinc chloride, fluorides, etc.)
Solder, soft (lead, tin)
Solvents
Sulfuric acid
Thinner, paint/lacquer
Tin
Transite
Turpentine, gum spirit, oil of turpentine
Varnishes
Waterproofing agents
Waxes
Welding Rods
Wood alcohol (methanol)
Wood preservative
Xylene
Zinc

APPENDIX III

LIST OF PROJECT SPECIFIC HAZARDOUS SUBSTANCES

On the following page(s) is a current list of the specific hazardous substances, along with the manufacturer's product identifier, known to be present at this jobsite.

This list uses the product identifier referenced on the SDS. Specific information on each substance may be found on the SDSs located in the project office.

APPENDIX IV

(PROJECT LETTERHEAD)

Date

Product Manufacturer's (Importer/Distributer/Responsible Party) Name
Product Manufacturer's (Importer/Distributer/Responsible Party) Address

Subject: Safety Data Sheet Requisition

Dear Manufacturer (Importer/Distributer/Responsible Party):

Please provide the following safety data sheet(s):

_____

_____

_____

_____

Thank you for your support and assistance in this matter.

Sincerely,

Requestor's Name
Requestor's Address

This document presents information that can be used for hazard communication training.

This information has been developed based on groups (types) of hazardous substance(s) used and the common hazards associated with them.

For specific hazard information on each brand of material the Safety Data Sheets (SDS) must be reviewed.

OVERVIEW OF THE HAZARD COMMUNICATION REGULATION

The Hazard Communication Regulation is intended to ensure that both employers and employees are aware of the dangers associated with hazardous substances in their workplaces. The following information is a review of the specific requirements of a hazard communication program, including container labeling, SDS and training.

WRITTEN HAZARD COMMUNICATION PROGRAM

We have a written program that outlines how we will provide information and control your exposure to hazardous substances. This plan is available for your review during our training and at the project office for review during your work shift.

HAZARDOUS SUBSTANCES USED IN OUR WORKPLACE

On this job, we use a variety of products. Many of these products contain one or more hazardous substances. Let's review the hazardous substance inventory in your work area.

READING LABELS AND SDS

LABELS: A product label on both the original and secondary containers should be reviewed prior to working with the material. Each label will have several important pieces of information you should be familiar with:

1. Product identifier (codes or product names matching those on the SDS).
2. Signal word (key words used to emphasize hazards and indicate the relative severity of the hazard).
3. Appropriate hazard statements (standard phrases assigned to a hazard class and category which describe the nature of the hazard).
4. Pictograms (graphic elements intended to convey specific information about the hazard).
5. Precautionary statements (supplement the hazard statements by briefly providing measures to be taken to minimize or prevent adverse effects from the hazard).

6. Name, address, and telephone number of the chemical manufacturer, importer, or other responsible party.

The label should act as a visual reminder of the information we have presented in this training session and of the information found in more detail on the SDS.
It is essential for your safety that you read the label only use the hazardous substance(s) within the guidelines prescribed. Questions concerning the label should be directed to your supervisor/foreman.

SAFETY DATA SHEETS (SDS): The SDS is the primary means we will use to convey the necessary information about the hazards of the substances we use. The manufacturers and importers are responsible for providing us with the SDS. The manufacturer must provide us with adequate information to use the substance safely.

PHYSICAL AND HEALTH HAZARDS OF THE HAZARDOUS SUBSTANCE(S) USED

Employees are to be trained specifically about the hazards of the substances in their work areas. This may be done by specific hazardous substances or by categories of hazards, but in any case, the employee is to be aware that information is available on the specific hazards of individual hazardous substances through SDSs.

Employees may be trained using the common type or generic chemical group or by reviewing the specific SDS as long as the training includes the following information:

1. Measures to protect employee from the hazards (i.e., work practices, engineering controls and the use of personal protective equipment).
2. The physical and health hazards of the hazardous substances.
3. Detection of release of the substance; emergency and first aid procedures.

EXAMPLE OF GENERAL HAZARDOUS SUBSTANCE GROUP TYPE TRAINING

Product/Chemical Group: Hydrocarbon Solvents.

Health Effects – Effect of Overexposure: High concentrations of solvent vapors are irritating to the eyes, nose, throat and lungs, may cause headaches and dizziness and sleepiness. Even higher levels may cause unconsciousness and may have other brain and central nervous system effects.

Prolonged or repeated liquid contact with the skin may cause defatting of the skin, leading to dryness, possible irritation and dermatitis (reddening and inflamed skin). Some solvents are absorbed right through the skin and the health effects are just as if the solvent vapor was inhaled.

Each organic solvent's possible long term health effects will vary; however, prolonged solvent exposures are related to possible liver, kidney and central

nervous system and brain damage (Note: The variety of solvent types should be reviewed).

Physical Hazards: Hydrocarbon solvents are flammable and combustible and represent fire and explosion hazards if the materials are not handled correctly. Hydrocarbon solvents are generally stable and will not react violently with water. Review the SDS section on Physical and Chemical Properties. Most solvents will vaporize rapidly and become airborne.

Detection of Release: Odor – Solvent vapor may produce an odor or cause your nose or eyes to be irritated, but do not depend on odor to warn you. Odor thresholds (lowest level that can be detected) for most solvents vary widely from person to person. Also, some solvents produce “olfactory fatigue” - the rapid loss of ability to smell the odor. However, odor can warn you of exposure to some solvents (confirm this with industrial hygiene monitoring).

Appearance – Most solvent vapors are invisible so do not rely on appearance to warn you for exposure.

Instrumentation – A variety of industrial hygiene instruments can be used to measure employee exposure. This equipment should be operated only are qualified personnel.

Emergency Response – For Flammable Solvents: If the material is spilled or leaks, shut-off and eliminate all sources of ignition. Recover the free product by adding absorbents to the spill. Minimize breathing vapors and skin contact. Ventilate the area by opening windows and doors. Follow the established hazardous waste disposal procedures.

Exposure Control: Protective Equipment, Engineering Controls and Proper Work Practices:

- Protective Equipment – Use chemical-resistant gloves, aprons or clothing if prolonged or repeated skin contact may occur. Use splash goggles and face shield when eye or face contact may occur. Use approved respiratory protective equipment as established by our Safety Program (Note: If needed, a review of the respiratory protective program may be appropriate).
- Engineering Controls/Work Practices – Ventilation is to be used when it is necessary to prevent build-up of vapors from both a health or fire and explosion concern. Keep containers closed when not in use. Do not handle or store near heat or sources of ignition or strong oxidants. No smoking, burning or welding is permitted near the flammable vapors. Use the bonding and/or grounding system when transferring materials. Most solvents will vaporize rapidly and become airborne.

APPROPRIATE EMERGENCY AND FIRST AID PROCEDURES

Eye contact – If splashed into the eyes, flush with water for 15 minutes or until irritation subsides. If irritation continues, call a physician.

Skin contact – In case of skin contact, remove any contaminated clothing and wash skin thoroughly with water and soap.

Inhalation – If overcome by vapors, remove from exposure and call a physician immediately. If breathing is irregular or has stopped, start resuscitation.

Ingestion – If ingested, DO NOT induce vomiting, call emergency medical aid immediately.

HAZARD COMMUNICATION TRAINING

Date: _____

I have received hazard communication training as described in the URS Corporation Hazard Communication Program.

Employee Name (Print)	Employee Signature	Employee Number

I hereby certify that the above named employees have been provided with hazard communication training.

_____ _____

Supervisor/Instructor's Name Supervisor/Instructor's Signature

HAZARDOUS PROPERTIES OF CHEMICALS TRAINING

Chemicals are a part of every aspect of our lives. A minute does not go by that we do not use something that contains chemicals, or chemicals were used in the manufacturing process. The chemicals you use in the work place only present potential health and physical hazards when they are mishandled, improperly used, incompatible mixtures combined, improperly stored or labeled.

Depending upon the chemical and the level of exposure, health hazards can vary from minor skin irritations to serious chemical burns, nerve damage, different forms of cancer and even death. Physical damage may include fires, explosions, property and environmental damage.

Hazard awareness is recognizing and understanding the potential injuries and illnesses or physical damage the chemicals can cause. The communication of this information is essential for your being aware of, understanding and respecting the potential hazards. This knowledge is important for the decisions you make concerning how you use the chemicals and the safe work practices you follow.

Remedial action response personnel may be exposed to a number of substances that are hazardous because of their properties. These properties can be summarized into three broad categories:

a. Physical/chemical
b. Biological
c. Radiological

It should be noted that many hazards may be present at any one time. It is important to understand the fundamentals of each of these properties and their relationships so that effective safety practices may be employed to reduce the risk to the public and remedial response personnel. Some hazards that may be encountered at this work site are toxic substances, flammable materials, explosive materials, corrosive materials, biological agents, excessive noise, heat or cold stress, oxygen deficient work areas, and radioactive materials.

PHYSICAL/CHEMICAL PROPERTIES

Physical hazards. Chemical compounds possess inherent properties, which determine the type and degree of the hazard they represent. Evaluating risks of an incident depends on understanding these properties and their relationship to the environment.

a. Solubility. The ability of a solid, liquid, gas or vapor to dissolve in a solvent is solubility. An insoluble substance can be physically mixed or blended in a

solvent for a short time but is unchanged when it finally separates. The solubility of a material is important when determining its reactivity, dispersion, mitigation and treatment.

b. Density. The density of a substance is its mass per unit volume, commonly expressed in g/cc.

c. Specific gravity. Specific gravity is the ratio of the density of a substance to the density of water. If the specific gravity of a substance is greater than 1 it will sink in water. The substance will float in water if its specific gravity is less than 1.

d. Vapor density. The vapor density is the density of a gas compared to the density of air. If the density of a gas is greater than that of air then the gas will tend to pocket and settle into the lowest points. If the vapor density is close to air or lower than air then the gas will disperse. If the vapor or gas displaces oxygen in the low spots then it can become an asphyxiant problem. If the gas or vapor is an explosive, when it pockets it will become an explosive hazard.

e. Flashpoint. If the ambient temperature in relation to the material of concern is right, then it may give off enough vapor at its surface to allow ignition by an open flame or spark. The minimum temperature at which a substance produces sufficient flammable vapors to ignite is its flashpoint. If the vapor does ignite, combustion can continue as long as the temperature remains at or above the flashpoint. The relative flammability of a substance is based on its flashpoint. An accepted relation between the two is:

Highly flammable:	Flashpoint <100°F
Moderately flammable:	Flashpoint >100°F & <200°F
Relatively inflammable:	Flashpoint >200°F

f. Chemical Hazards. Hazardous conditions that may exist because of the chemical nature of substances may be summarized as fire hazards, explosive hazards, corrosive hazards, and chemical reactivity.

Fire Hazards

a. Combustibility: Combustibility is the ability of a material to act as a fuel, that is, to burn. Materials that can be readily ignited and sustain a fire are considered to be combustible, while those that cannot are called noncombustible. Three elements are required for combustion to occur: fuel, oxygen, and heat. The concentration of the fuel and the oxygen must be high enough to allow ignition and maintain the burning process. Combustion is a chemical reaction that requires heat to proceed. Heat is supplied by the

ignition source and is maintained by the combustion, or it must be supplied from an external source. The relationship of these three fire components can form a triangle. If one leg of the triangle is removed, then the fire can be extinguished. For example, water applied to a fire removes the heat, thereby extinguishing the fire. When a material generates enough heat by itself to self-ignite and combust, spontaneous combustion occurs, either as a fire or explosion (e.g., diesel greater than 140 degrees Fahrenheit is combustible.)

b. Flammability: Flammability is the ability of a material (liquid or gas) to generate a sufficient concentration of combustible vapors under normal conditions to be ignited and produce a flame. It is necessary to have a proper fuel-to-oxygen (oxygen) ratio (% fuel in air) to allow combustion. A flammable material is considered highly combustible if it can burn at ambient temperatures. However, a combustible material is not necessarily flammable because it may not be easily ignited or the ignition maintained. Pyrophoric materials will ignite at room temperature in the presence of a gas or vapor or when a slight friction or shock is applied.

The substances listed below are easily ignited (pyrophorics), require little oxygen to support combustion, have low flammability limits and explosive limits and a wide flammable and explosive range.

Flammable liquids	**Flammable solids**
Aldehydes	Phosphorus
Ketones	Magnesium Dust
Amines	Zirconium Dust
Ethers	Titanium Dust
Aliphatic Hydrocarbons	Aluminum Dust
Aromatic Hydrocarbons	Zinc Dust
Alcohols	
Nitroaliphatics	

Water Reactive Flammable Solids	**Pyrophoric Liquids**
Potassium	Organometallic compounds
Sodium	Dimethyl Zinc
Lithium	Tributyl Aluminum

Some of the hazards related to fires and explosions can cause physical destruction due to shock waves, heat, and flying objects. Secondary fires can be created as well as other flammable conditions. Toxic or corrosive compounds may also be released to the surrounding environment as well.

Explosives

An explosive is a substance, which undergoes a very rapid chemical transformation producing large amounts of gases and heat. The gases

produced, for example, nitrogen, oxygen, carbon monoxide, carbon dioxide, and steam, due to the heat produced, rapidly expand to velocities exceeding the speed of sound. This creates both a shockwave (high pressure front) and noise. The main categories of explosives are listed below.

High or detonating – produces a shock wave followed by combustion.

Primary high explosive – detonation occurs in a short time. Examples: lead azide, mercury fulminate, and lead styphnate.

Secondary high explosive – needs a booster to detonate. Examples: Tetryl, cyclonite, dynamite and TNT

Low or deflagrating – Explosive rate very fast. Combustion followed by a shock wave. Examples: smokeless powder, magnesium, and molotov cocktail.

Corrosive Hazards

Corrosion is a process of material degradation. Upon contact, a corrosive material may destroy body tissues, metals, plastics, and other materials. Corrosivity is the ability of material to increase the hydrogen ion concentration of a material or to transfer electron pairs of or from itself or another material. A corrosive material is a reactive compound or element that produces a destructive chemical charge in the material it is acting on. Common corrosives are:

Halogens	**Acids**	**Bases (Caustics)**
Bromine	Acetic acid	Potassium Hydroxide
Chlorine	Hydrochloric acid	Sodium Hydroxide
Fluorine	Hydrofluoric acid	
Iodine	Nitric acid	
	Sulfuric acid	

Skin irritation and burns are typical results when the body contacts an acidic or basic corrosive material.

The measure of an acid or a base is the pH scale. The pH scale ranges from 0 to 14 with a pH <7 being acidic and a pH>7 being basic. The lower the pH of the acid the more acidic is the material, and the higher the pH of the base the more basic the material. A pH of 7 is considered neutral.

Chemical Reactivity

a. Reactivity hazards. A reactive material is one that undergoes a chemical reaction under specified conditions. Generally, the term “reactive hazard” is used to refer to a substance that undergoes a violent or abnormal reaction in

the presence of water or under normal ambient atmospheric conditions. Among this type of hazard are the pyrophoric liquids that will ignite in air at or below normal room temperature in the absence of added heat, shock, or friction, and the water-reactive flammable solids that will spontaneously combust upon contact with water.

The most common reactive mixture in construction is found in gas welding or brazing. Acetylene gas mixes with oxygen to provide an extremely powerful reaction in the form of a very intense flame.

b. Compatibility. If two or more hazardous materials remain in contact indefinitely without reaction, they are compatible. Incompatibility, however, does not necessarily indicate a hazard. For example, acids and bases (both corrosive) react to form salts and water, which may not be corrosive.

The compatibility of materials must be determined before the materials are used or stored. Some examples of incompatibilities are sulfuric acid and plastics (toxic gas or vapor is produced), acids and metal (flammable gas or vapor is produced), chlorine and ammonia (chlorine gas is created, toxic gas). There are many other incompatibilities that may be found. Check to make sure that the materials used for a project are compatible.

All of the hazards listed above will be found on the safety data sheet (SDS). The SDS is a short technical report that provides you with the known hazards of a specific material. The SDS explains how to properly use the material, handle any problems related to the material and how to store the material. Know what the SDS says for the materials that you work with.

All materials should have a label on them. This is the first and easiest place to look to see if a material is hazardous. Labels should tell you any precautions that must be taken when handling the material. Read the label on the materials that you use and abide with the cautions and warnings. If a material is not properly labeled, notify your supervisor so that the problem is corrected.

BIOLOGICAL HAZARDS

Biological agents are living organisms that can cause sickness or death to exposed individuals. Biological hazards can cause infection or disease to persons who are exposed.

Biological hazards may involve plants or animals including microorganisms. Biological hazards, such as disease causing agents, may be present at a hazardous waste site or involved in a spill. Like chemical hazards, they can be dispersed throughout the environment via wind and water.

Many biological agents require a carrier to inoculate a person. For instance, rabid rodents at a landfill may be a biological hazard. Deer carry ticks may have Rocky Mountain Spotted fever; prairie dogs will not.

The same personnel protective requirements for a response to a chemical hazard apply to biological hazards. Body coverings and respiratory protective equipment might have to be utilized. Especially important is the need to maintain personnel cleanliness. Before eating, drinking or smoking residual contamination should be washed off.

BIOHAZARDS

Biohazard training will be provided to employees as per the blood borne pathogen program (SMS 051).

HAZARDOUS MATERIAL PROTECTION

The routes of exposure for hazardous materials include the following:

- Inhalation – Breathing contaminated air (e.g., welding fumes.)
- Skin Absorption – Contact with harmful liquids, gases, solids or contaminated clothing, equipment, medications, cosmetics, etc. A good example is solvents. Materials can also enter through an open wound.
- Ingestion – Eating or drinking contaminated foods, water or medications. (Remember food and cigarettes can become contaminated by your unwashed hands, gloves, equipment. Good hygiene practices are very important.)
- Injection – A contaminated material can be injected into some part of the body.

Protection from potentially hazardous materials includes the following:

- Use good personal hygiene. This is the simplest control measure to chemical hazards.
- Know what protective equipment is required for the specific job you are doing. Ask your supervisor what risks you might encounter and what hazardous substances you are working with.
- Know what potential explosive and or flammable conditions may exist with the job you are doing.
- Have all confined spaces checked for explosives, hydrogen sulfide, carbon monoxide, and oxygen deficiency. Know what hazards are involved with confined spaces.
- Know where emergency equipment is located and how to use it. For example, know where the nearest fire extinguisher is from your work area.

- Know the standard operating procedures for rescue and emergency situations.
- Know the proper method for decontamination when working with hazardous materials.
- Use the buddy system when at all possible. Keep communication lines open when working with hazardous materials.
- Stay out of contaminated areas if you are not properly trained, equipped, or authorized to enter. Do not take chances with life-threatening materials or situations.

PERSONAL PROTECTIVE EQUIPMENT

Different types of protective equipment will be required depending on the substances to be handled, the existing conditions, and the particular situation. Personal protective equipment includes a variety of special suits, hard hats, goggles, face shields, aprons, boots, gloves, and respirators. Each is designed to protect you from certain hazards. It is important for you to know the advantages and disadvantages of all the equipment you may use or need. Use all equipment as instructed and follow all written procedures for the specific equipment.

STANDARD OPERATING PROCEDURES FOR EMERGENCY SITUATIONS

Standard operating procedures exist for any unexpected event such as an accident, fire, explosion, etc.

If you know or suspect that you have been contaminated with a hazardous substance, **TELL YOUR SUPERVISOR**. You should know the general symptoms of over-exposure to toxic substances. These include:

- Irritation of skin, eyes, nose, throat, or respiratory tract
- Changes in complexion or skin discoloration
- Headache
- Difficulty in breathing
- Nausea
- Dizziness or light-headedness
- Excessive salivation (drooling)
- Lack of coordination
- Blurred vision
- Cramps and/or diarrhea
- Changes in behavior patterns

You should know the location of emergency eyewash and shower facilities.

Before you enter, and periodically while you are working in confined spaces such as tanks, crawl spaces, ditches, etc., the air in the space should be tested by a qualified individual for oxygen content, explosive levels, toxic gases, and other hazardous materials.

Understand the site emergency response procedures and know the locations of response equipment before the need arises. If you must rescue someone, use proper precautions and protective equipment. **DO NOT BECOME A CASUALTY YOURSELF**. Move the affected person from the hazardous exposure if possible. Get help and follow emergency rescue procedures.

For spills and leaks of hazardous materials limit the leak or spill as quickly as possible. Small spills should be cleaned up immediately. If a valve must be closed to prevent a spill from continuing then do so. If the spill is large, or your skin, eyes or clothing are contaminated, leave the work area immediately. Wash eyes, skin, and clothes off with lots of water to remove the material. Get to fresh air. Notify your foreman or supervisor as soon as it is safe for you to do so. Unless you have special training and the proper protective equipment, do not try to clean up large spills yourself.

If a corrosive material is splashed in your eyes or on your skin and clothes, deal with it immediately. Wash the affected area with plenty of water (at least 15 minutes with a continuous stream). Remove any contaminated clothing. Get to fresh air if you feel burning in the nose, throat or lungs. Do not vomit if you have swallowed a corrosive material. Drink large quantities of water to dilute the material, and seek immediate medical attention.

EXAMPLES OF HAZARDOUS MATERIALS POSSIBLY FOUND ON SITE

SOLVENTS

Solvents are among the most common toxic materials in the workplace. Many processes, mixing and cleaning, use or give off solvent vapors. They are also used as thinners in paints and adhesives. Solvents vary in their toxicity from practically non-toxic materials such as the alcohols, ketones, halogenated solvents, to the very toxic such as dimethyl acetamide, methyl acrylate and other materials. Some solvents are also flammable or reactive.

Solvents can cause irritations to the eyes and skin when in high concentrations. Most will dissolve the protective layer of oils on the skin and leave it looking white in the small cracks. They should never be used to clean the skin; if there is a problem with contamination, some form of glove or barrier cream should be used to protect the skin. The early signs of overexposure often include headaches, dizziness, nausea and other related symptoms.

METALS AND SOLID PARTICULATES

Examples: Babbitt metal, cadmium, galvanized metal, lead, manganese, nickel, zinc

Metals and other particulate solids can be toxic and are usually given off when welding or grinding. Some, like gypsum dust are only nuisance dusts, while others, like zinc fume from welding cause flu-like symptoms. Others, like asbestos have been linked to cancer and other chronic diseases. Dusts can irritate the skin and be ingested with food, drinks or smoking materials if they aren't washed off the hands and removed from clothing. They may also be carried home to family members and cause problems there if they are not washed off before leaving the work area.

When the welding, brazing, grinding or cutting of metal is performed, care should be taken to avoid breathing the fumes or dusts. Local exhaust ventilation should be used to reduce your exposure. If fumes and dust cannot be controlled with exhaust ventilation, appropriate approved respirators should be used. Approved safety goggles and gloves should be worn when working with metals. Gloves may be necessary to prevent skin sensitization and dermatitis.

ACIDS

Examples of acids found on URS Corporation sites are sulfuric acid (used in water treatment plants and found in batteries), hydrochloric acid, and nitric acid. Acids are considered corrosives and cause material degradation. Acids destroy tissues, metals and other materials. Acids can cause skin irritations in the form of rashes or other types of dermatitis, and more severe problems such as skin or eye burns. When working with acids proper eye and face protection should be worn as well as hand protection.

LUBRICANTS, COOLANTS AND MACHINE OILS

Lubricants, coolants and machine oils are common in construction sites. There are three types: petroleum based (straight oils), water based, and synthetic fluids that contain no oils. Many cutting oils contain additives to inhibit corrosion, prevent bacterial growth and permit high temperature operation. The fumes and mist from cutting operations can be irritating to the eyes and lungs. Skin exposure can result in acne-like conditions and can cause other problems. Avoid breathing mist and fumes and use gloves and aprons to minimize contact with materials.

GASES

Examples: Acetylene, ammonia, carbon dioxide, carbon monoxide, freon, oxygen, hydrogen, liquefied petroleum gas, propane

Gases present a range of problems. Some, like nitrogen, are simple asphyxiates. They prevent the body from getting enough oxygen by displacing it from the air stream. Some are chemically hazardous, like carbon monoxide, or nitrous oxide, which cause poisoning of the body systems. Some are very toxic, like arsine and phosphine. Some are very reactive and should be dealt with in very careful manners. Other gases, like hydrogen, oxygen and acetylene are explosives and must be treated with great care. Chains and stands should secure all compressed gas cylinders at all times, and only the proper fittings should be used. Liquefied and petroleum gases are extremely flammable and considered simple asphyxiates.

PLASTICS, EPOXIES AND POLYMERS

Plastics, epoxies and polymers are a growing group of industrial chemicals. Materials such as polystyrene, polypropylene, acrylates, vinyl, and polyurethane are but a few. Although most of these materials are not toxic in their final form, where they are being molded, extruded, laid up, there can be significant hazards. When burned, these materials can be very hazardous.

CLEANERS

Cleaners contain acid, alkalis, aromatics, surfactants, petroleum products, ammonia and hypochlorite. Because of these ingredients these materials are considered to be irritants, and can be harmful to you if swallowed or inhaled. Many may cause eye, nose, throat, and skin and lung irritation. Some cleaners are flammable and burn easily. Others may be caustic or corrosive and cause severe skin burns. Because many cleaners used in the job area are consumer products commonly found in our homes, you may underestimate the hazard they pose. Protect yourself from these hazards by reading the labels and following the recommended precautions. Wear gloves and eye protection. Avoid inhaling the vapors and mists. Wash your hands and face thoroughly before eating, drinking or smoking.

Specific emergency procedures for each chemical will be detailed on that cleaner's safety data sheet. In general, if a cleaning chemical gets into your eyes, flush the eyes with clean running water for at least 15 minutes, then seek medical attention. If the chemical gets on your skin, wash the area of contact and seek medical attention.

Do not mix two cleaning chemicals together, unless specifically told to do so by your supervisor. For example, the dangerous gas, chlorine, will be created if you mix bleach and ammonia or bleach and drain cleaner together.

Examples: Abrasive cleaners, bleach, drain cleaner, general purpose cleaning spray, germicide, and glass cleaner, metal cleaner, rug and upholstery cleaners, stain remover.

FUELS

Examples: Diesel oil, gasoline, propane, kerosene

The primary hazard posed by fuels is obviously, fire. Fuels are either flammable or combustible. Whether flammable (a material which is easily ignited and burns with extreme rapidity) or combustible (a material capable of fueling a fire), they should be handled with care.

Proper storage and transport of fuels in approved, self-closing, safety containers is extremely important and should be strictly adhered to at all times. When filling portable containers with flammable materials they should be properly grounded and bonded to the container to prevent ignition from static electricity.

Store gasoline in containers marked “gasoline”. Store kerosene in containers marked “kerosene”. Never use kerosene containers for the transport or storage of gasoline.

Excessive skin contact with fuels can result in dermatitis. Some petroleum products have been shown to cause skin tumors. Inhalation of fuel vapors over a long period of time can cause central nervous system depression, and may aggravate any existing respiratory problems that may exist. Ingestion of fuels can cause poisoning. Do not induce vomiting. If fuels get in your eyes, rinse with clean water for at least 15 minutes and seek medical attention.

LABELING

Proper labeling of all chemical containers is another excellent control measure to chemical hazards. Container labels give a code or name identifying the chemical in the container, the name, address, and telephone number of the manufacturer, importer, or distributor; and symbols, signal words, and hazard statements that warn you of possible dangers. Read the label on all materials with which you work.

Examples of signal words and hazard statements:

- Danger, fatal if swallowed
- Danger, toxic if swallowed
- Warning, may be harmful if swallowed

Labels and their warnings should be taken seriously since they provide you with the first clue to the hazards posed to your health and safety. They also give information on personal protective equipment required, emergency response and first-aid steps in case of an exposure, proper procedures in case of a spill and emergency phone numbers.

SDS

Safety data sheets, if read and followed, are a powerful means of controlling chemical exposures. Chemical manufacturers are required to provide SDSs for the chemicals they produce or import. The purpose of the SDS is to communicate information on the recommended safe use and handling procedures for that chemical.

All SDS must provide certain categories of information about the chemical substance or mixture:

- Identification of the substance or mixture and of the supplier
- Hazards identification
- Composition/information on ingredients
- First aid measures
- Firefighting measures
- Accidental release measures
- Handling and storage
- Exposure controls/personal protection
- Physical and chemical properties
- Stability and reactivity
- Toxicological information
- Ecological information
- Disposal considerations
- Transport information
- Regulatory information
- Other information including information on preparation and revision of the SDS

HAZARD COMMUNICATION TRAINING QUESTIONS

NAME: _____ LOCATION: _____

1. Container labels must:
   A. Give directions to the manufacturing plant.
   B. Give price of the product.
   C. Notify the user of the physical and health hazards.
   D. Provide translation in Spanish.

2. What is an SDS?
   A. Main Statistical Data Service.
   B. Safety Data Sheet.
   C. New accident reporting system.
   D. Both A and C.

3. What are the requirements of the Hazard Communication Standard?
   A. Chemical inventories.
   B. Container labeling.
   C. Negotiations for purchase price of chemicals.
   D. SDSs.
   E. Employee Training.
   F. All of the above except C.

4. What is one way to determine if a chemical has been spilled or released in your work area?
   A. When you smell something out of the ordinary.
   B. By reading the SDS and being knowledgeable of the chemical appearance and odor.
   C. Call somebody.
   D. Both A & B.

5. How can you protect yourself from chemical exposures?
   A. Personal protective equipment and proper work practices.
   B. Stay upwind of vapors and gases.
   C. Use proper ventilation.
   D. All of the above.

6. What are the main examples of chemicals found on site?
   A. Solvent, fuel, metals, lubricants, gases.
   B. Toxic, flammable, corrosive, reactive, pressurized.
   C. Physical properties and health effects.
   D. The good, the bad and the ugly.

7. New and transferred employees must be trained on the hazards of their new work area.
   A. True
   B. False

8. An SDS provides what?
   A. Supervisor guide to acid unloading.
   B. Engineering data.
   C. Health, safety and first-aid information.
   D. Chemical process checklist.

9. Where is your site-specific Hazard Communication program located?
   A. Accident Prevention Manual.
   B. Employee Handbook.
   C. Budget Manual.
   D. SDS Book.

10. A new chemical used in your area is always considered a new hazard.
    A. True
    B. False

11. If an SDS is not available for the chemical you are using, you should?
    A. Notify your supervisor.
    B. Call the manufacturer.
    C. Contact the Safety Department.
    D. Nothing, most chemicals are safe.
    E. Both A & C.

12. Labeling systems use words, graphics, geometric shapes, and colors to warn you of any possible danger to your health and safety, and to tell you about safe work practices you need to follow when handling chemicals.
    A. True
    B. False

13. A flammable liquid is a liquid with a flashpoint:
    A. Of 2,000 degrees Fahrenheit
    B. Below 200 degrees Fahrenheit
    C. At freezing
    D. All of the above

14. Which Signal Word represents the most serious hazard?
    A. Caution
    B. Warning
    C. Danger
    D. Beware

15. Chemicals can enter the body through:
    A. Breathing them in
    B. Contact with body openings
    C. Both A and B
    D. None of the Above

16. If you are not familiar with a chemical, you should check the Safety Data Sheets.
    A. True
    B. False

17. A primary/original container label for a chemical must include:
    A. A code or name identifying the chemical
    B. The chemical manufacturers or importer's name, address, and telephone number
    C. Warnings of its hazardous content
    D. All of the above

18. A container label should be checked only if you do not know the contents of the container.
    A. True
    B. False

19. If a label is torn or missing, you should report it right away to the proper personnel at your facility.
    A. True
    B. False

20. The Hazard Communication Standard is also referred to as the Right to Know Standard.
    A. True
    B. False

21. A Safety Data Sheet is required for all hazardous materials in your facility.
    A. True
    B. False

22. Safe work practices require a complete understanding and respect for the potential hazards.
    A. True
    B. False

23. The written emergency response plan contains the procedures to take in the event of an emergency.
    A. True
    B. False

HAZARD COMMUNICATION TRAINING QUESTIONS
ANSWER SHEET

1. Container labels must:
   A. Give directions to the manufacturing plant.
   B. Give price of the product.
   C. Notify the user of the physical and health hazards.
   D. Provide translation in Spanish.

2. What is an SDS?
   A. Main Statistical Data Service.
   B. Safety Data Sheet.
   C. New accident reporting system.
   D. Both A and C.

3. What are the requirements of the Hazard Communication Standard?
   A. Chemical inventories.
   B. Container labeling.
   C. Negotiations for purchase price of chemicals.
   D. SDSs.
   E. Employee Training.
   F. All of the above except C.

4. What is one way to determine if a chemical has been spilled or released in your work area?
   A. When you smell something out of the ordinary.
   B. By reading the SDS and being knowledgeable of the chemical appearance and odor.
   C. Call somebody.
   D. Both A & B.

5. How can you protect yourself from chemical exposures?
   A. Personal protective equipment and proper work practices.
   B. Stay upwind of vapors and gases.
   C. Use proper ventilation.
   D. All of the above.

6. What are the main examples of chemicals found on site?
   A. Solvent, fuel, metals, lubricants, gases.
   B. Toxic, flammable, corrosive, reactive, pressurized.
   C. Physical properties and health effects.
   D. The good, the bad and the ugly.

7. New and transferred employees must be trained on the hazards of their new work area.
   A. True
   B. False

8. An SDS provides what?
   A. Supervisor guide to acid unloading.
   B. Engineering data.
   C. <u>Health, safety and first-aid information</u>.
   D. Chemical process checklist.

9. Where is your site-specific Hazard Communication program located?
   A. Accident Prevention Manual
   B. Employee Handbook
   C. Budget Manual
   D. <u>SDS Book</u>

10. A new chemical used in your area is always considered a new hazard.
   A. <u>True</u>
   B. False

11. If an SDS is not available for the chemical you are using, you should?
   A. Notify your supervisor.
   B. Call the manufacturer.
   C. Contact the Safety Department.
   D. Nothing, most chemicals are safe.
   E. <u>Both A & C</u>

12. Labeling systems use words, graphics, geometric shapes, and colors to warn you of any possible danger to your health and safety, and to tell you about safe work practices you need to follow when handling chemicals.
   A. <u>True</u>
   B. False

13. A flammable liquid is a liquid with a flashpoint:
   A. Of 2,000 degrees Fahrenheit
   B. <u>Below 200 degrees Fahrenheit</u>
   C. At freezing
   D. All of the above

14. Which Signal Word represents the most serious hazard?
   A. Caution (note not a signal word for HAZCOM but is used by EPA)
   B. Warning
   C. <u>Danger</u>
   D. Beware (note not a signal word for HAZCOM)

15. Chemicals can enter the body through:
   A. Breathing them in
   B. Contact with body openings
   C. <u>Both A and B</u>
   D. None of the Above

16. If you are not familiar with a chemical, you should check the Safety Data Sheets.
    A. <u>True</u>
    B. False

17. A primary/original container label for a chemical must include:
    A. A code or name identifying the chemical
    B. The chemical manufacturers or importer's name, address, and telephone number
    C. Warnings of its hazardous content
    D. <u>All of the above</u>

18. A container label should be checked only if you do not know the contents of the container.
    A. True
    B. <u>False</u>

19. If a label is torn or missing, you should report it right away to the proper personnel at your facility.
    A. <u>True</u>
    B. False

20. The Hazard Communication Standard is also referred to as the Right to Know Standard.
    A. <u>True</u>
    B. False

21. A Safety Data Sheet is required for all hazardous materials in your facility.
    A. <u>True</u>
    B. False

22. Safe work practices require a complete understanding and respect for the potential hazards.
    A. <u>True</u>
    B. False

23. The written emergency response plan contains the procedures to take in the event of an emergency.
    A. <u>True</u>
    B. False

URS SAFETY MANAGEMENT STANDARD

Emergency Preparedness Plans & Crisis Management Plans

1. Applicability

This procedure applies to the operations of URS Corporation and its subsidiary companies.

2. Purpose and Scope

This standard establishes policy, assigns responsibilities, and provides guidance to URS offices/field projects regarding emergency preparedness. It includes general information on actions to be taken by URS management and employees in the event of an emergency that may endanger life or property.

The objectives of this procedure are to:

A. Promote a fast, effective reaction in coping with emergencies.

B. Save lives, and avoid injuries and panic.

C. Restore order and conditions to normal levels with a minimum of confusion and as promptly as possible.

3. Procedures

The associated implementing regional procedures for this standard are included as attachments:

SMS 003 NA – North America

SMS 003 INT – International Operations (including Europe, Asia, South America and Africa)

SMS AP10-003 – Australia / New Zealand

URS SAFETY MANAGEMENT STANDARD

Emergency Preparedness & Crisis Management Plans

1. Applicability

This standard applies to URS Corporation and its subsidiary companies. Each location shall establish a site-specific emergency preparedness/incident management plan. In addition, each division will maintain a Crisis Management Plan to operate under the organizational structure and manage emergency operations.

2. Purpose and Scope

This standard establishes policy, assigns responsibilities, and provides guidance to URS offices/field projects regarding emergency preparedness. It includes general information on actions to be taken by URS management and employees in the event of an emergency that may endanger life or property.

The objectives of this standard are as follows:

A. Promote a fast, effective reaction in coping with emergencies.

B. Save lives, and avoid injuries and panic.

C. Restore order and conditions to normal levels with a minimum of confusion and as promptly as possible.

3. Implementation

Implementation of this standard is the responsibility of the URS manager directing activities of the facility or project location. For EC projects and offices the EC Crisis Management Team is responsible for the overall management of Emergency Planning and the local Incident Management Team Leader is responsible for local implementation and management of the program.

4. Requirements

A. Emergency Preparedness Plan (also known as Emergency Action Plan) Development

1. Gather Information

Each URS office and field office must develop an Emergency Preparedness Plan (EPP) tailored to its specific location. Office Managers will check with their building manager or landlord regarding evacuation procedures they may have in place and incorporate these procedures into the EPP. Field office EPPs must

comply with client requirements and specifications. The EPP must contain the following:

a. Reporting Procedures for Fires and Other Emergencies

   Describe the procedures that personnel should follow to report emergencies (fires, hazardous substance release, etc.). List emergency telephone numbers for fire, paramedics, and police. Include local prefixes on emergency numbers, if required, such as 9-911.

b. Alarm System and Security Measures

   Describe the emergency alarm system and security measures for the building/site as applicable. Include the description and location of fire alarm pull boxes and visual and audible alarms, security personnel, and secured access points. If a public address (PA) system is used to notify occupants of emergencies, include the procedures to activate the PA system, such as calling the receptionist or building manager's office, and a description of the announcements that will be made.

c. Evacuation Routes and Procedures

   Develop a map or description of the evacuation routes and emergency exits to be used. A description of the building emergency lighting system, exit signs, and available fire suppression systems may also be included. Evacuation route maps may be posted in the offices. There should be a primary and alternate evacuation route and exit from each work area.

   Describe procedures regarding the use of elevators, if applicable. In most cases, elevator use is prohibited during an emergency. The building manager should be consulted for these procedures.

   Include procedures to determine that no employees have been inadvertently left behind.

d. Severe Weather Planning

Describe potential severe weather that may impact the location and shelter areas that are available. Shelter areas should be designated on evacuation route maps.

If performing outdoor activities and thunder is heard, lightning is seen, or dark threatening clouds are observed overhead, take cover immediately in a safe location including a building or vehicle. Do not stay in (or on) convertibles, golf carts, riding mowers, open cab construction equipment or boats without cabins. Remain in the safe location until at least 30 minutes after the last thunder clap is heard.

e. Critical Equipment/Operations Procedures

Designate personnel responsible for shutting down and restarting critical equipment and the procedures for doing so, if applicable. Refer to SMS 098 - Management of Change prior to restarting operations.

f. Assisting Disabled Personnel

Describe the provisions that have been made for notifying and assisting personnel with disabilities during an emergency. Such provisions are to accommodate personnel in wheelchairs, those who are temporarily disabled (such as personnel on crutches), and those with impaired vision or hearing.

g. Personnel Accounting Procedures

Designate a primary and alternate assembly area for personnel who are evacuating. Require sufficient distance so that personnel will not be exposed to fire, debris, or traffic, nor interfere with emergency responders.

Designate an individual and an alternate to be responsible for taking a headcount in the assembly area and reporting missing personnel to emergency responders.

Define procedures on how employees will be informed that it is safe to re-enter the building or to leave for home.

Define emergency procedures for employees who remain on site.

h. Rescue and Medical Duties

In some situations, URS personnel are in job positions that require the employees to engage in firefighting, medical treatment, rescue or other emergency response. Employees must be properly trained to perform these functions and must be identified in the EPP.

When applicable, include the following statement: "URS does not expect or encourage its employees to engage in firefighting, medical treatment, rescue, or other emergency response. Such activities should only be performed by properly equipped and trained emergency responders. URS recognizes that some of its personnel may have received training in first aid and cardiopulmonary resuscitation (CPR) and may wish to perform these duties on injured personnel."

Require that no employees leave the facility until all employees are accounted for.

i. Resources

The location or project/site specific EPP must include the name/title of staff who can respond to questions about the plan and/or the expectations of the individual employees in an emergency situation.

2. Develop EPPs based on the information gathered as described previously. EPPs may be stand-alone documents for office locations or may be included within site-specific health and safety plans.

B. Posting

1. Post the Emergency Preparedness Plan where it is available to all site employees.

2. Post evacuation maps at all exits and points of egress.

C. Training

1. Train all employees regarding the requirements of the Emergency Preparedness Plan for their office or facility location and his/her role in an emergency situation.

2. Conduct evacuations drills and, where required, rescue procedures at office and facility locations at least annually.

3. Training will be conducted initially and as needed due to changes in procedures.

D. Coordination

During development and after implementation, it is critical to work with and coordinate emergency preparedness plan activities with local authorities, clients, representatives, building managers, property managers, security personnel, and designated office or project safety staff, and with local rescue and medical facilities.

E. Visitor and Crowd Control

When an emergency occurs at URS offices or field offices, it is important to ensure the safety of visitors or members of the public. Remember that visitors and members of the public are probably not familiar with the emergency procedures and may need to be escorted by URS personnel during the emergency.

F. Security

1. Keep visitors and unnecessary personnel from entering an office or jobsite after an emergency has occurred.

2. Safeguard property, equipment, and/or materials during an emergency. The in-house or contract security personnel should be integrated into the emergency preparedness plan and their expected response and areas of responsibility in response to emergencies should be designated. If not, it may be necessary to assign company employees to act as watchmen during and after the emergency.

G. Community Relations

If an emergency at a URS office, field office, or jobsite may place a community at risk, the appropriate local and/or community emergency response personnel should be notified and given pertinent information on the occurrence.

H. Division Emergency Preparedness/Crisis Management Plans

The division-specific Emergency Preparedness and Crisis Management Plan (CMP) is established for the purpose of protecting employees,

property, assets, reputation, the general public, the environment, and the communities in which URS operates. The CMP provides an overview of emergency preparedness and its importance to URS. This CMP provides guidance to division management regarding roles and responsibilities in the event of a crisis requiring coordinated corporate and/or division response. This CMP also provides guidance for making decisions during natural or man-made emergencies or crises. The FS and IE CMPs are included in Attachment 003-1. Contact the EC Security Department regarding the EC CMP.

5. Documentation Summary

The following documentation will be maintained in the office/project files:

A. Emergency Preparedness Plan.

B. Evacuation maps.

C. Training records.

6. Resources

A. U.S. Occupational Safety and Health Administration (OSHA) Standard – Emergency Action Plans – 29 Code of Federal Regulations (CFR) 1910.38

B. U.S. OSHA – Emergency Exit Routes Fact Sheet

C. Attachment 003-1 FS – Federal Services Emergency Preparedness and Crisis Management Plan

D. Attachment 003-1 IE – Infrastructure & Environment Emergency Preparedness and Crisis Management Plan

E. Energy & Construction Crisis Management Plan (contact Security)

7. Supplemental Information

A. Federal Services - Emergency Preparedness and Incident Management Plan Template

URS Infrastructure & Environment

Emergency Preparedness & Crisis Management Plan

Table of Contents

LIST OF ACRONYMS AND ABBREVIATIONS III

1.0 GENERAL INFORMATION 1
1.1 Introduction 1
1.2 Approach Summary 1
1.3 Document Control 1
1.4 Applicability 1
1.5 Scope 1

2.0 DEFINITIONS 2

3.0 CRISIS MANAGEMENT ORGANIZATION 3
3.1 Purpose 3
3.2 CM Roles and Responsibilities 3
3.2.1 IE President 3
3.2.2 Crisis Management Team 4
3.3 CMT Purpose and Scope 4
3.3.1 CMT Leader 4
3.3.2 Group General Managers/Vice Presidents 5
3.3.3 Communications 5
3.3.4 Security 6
3.3.5 Health, Safety, and Environmental 6
3.3.6 Finance and Administration 6
3.3.7 Human Resources 7
3.3.8 Legal 7
3.3.9 Information Technology 7
3.4 Crisis Management Team Meetings 7

4.0 TRAINING 8

5.0 CENTRAL COMMAND CENTER 8
5.1 Primary Location 8
5.2 Alternate Location 8
5.3 CCC Requirements 8

6.0 INCIDENT RESPONSE 8
6.1 Planning 8
6.2 Incident Notification 9
6.3 Response Procedures 9

7.0 COMMUNICATIONS 10

8.0 POST-INCIDENT RECOVERY 11
8.1 Resuming Operations 11

8.1.1 Documentation Requirements 11
8.1.2 Responsibility for Incident Documentation....11
8.2 Investigation Responsibilities....11
8.2.1 Damage Assessment....11
8.2.2 Critique....11

9.0 EMPLOYEE/FAMILY SUPPORT 12

ATTACHMENT A – INITIAL RESPONSE CHECKLIST 1

ATTACHMENT B – TELEPHONE THREAT CHECKLIST 1

ATTACHMENT C – IE CRISIS MANAGEMENT TEAM CONTACT LIST 1

LIST OF ACRONYMS AND ABBREVIATIONS

ACCC	Alternate Crisis Command Center
CCC	Crisis Command Center
CMP	Emergency Preparedness and Crisis Management Plan
CMT	Crisis Management Team
EP/CM	Emergency Preparedness and Crisis Management
EPP	Emergency Preparedness Plan
HSE	Health, Safety, and Environment
HR	Human Resources
ICC	Incident Command Center
IMT	Incident Management Team
IE	URS Infrastructure & Environment
IT	Information Technology
POC	Point of Contact
SMS	Safety Management Standard

1.0 GENERAL INFORMATION

1.1 Introduction

The URS Infrastructure & Environment (IE) Emergency Preparedness and Crisis Management Plan (CMP) is established for the purpose of protecting employees, property, assets, reputation, the general public, the environment, and the communities in which URS IE operates. The CMP provides an overview of emergency preparedness and its importance to URS IE. This CMP provides guidance to IE management regarding roles and responsibilities in the event of a crisis requiring coordinated corporate and/or IE response. This CMP also provides guidance regarding decisions during natural or man-made emergencies, and addresses the approach to providing assistance to employees and their families following a crisis that results in an employee fatality.

1.2 Approach Summary

Most IE incidents are properly managed at the Project, Office, or Regional level. These incidents may involve property damage, temporary office closure due to weather, employee injuries, project performance concerns, or similar events. Although managed locally/regionally, these events are to be communicated to IE management through the appropriate channels.

Certain events have the potential for creating a crisis situation, with significant impacts on employee or public safety, continuity of IE operations, or URS reputation. The activation of the IE Crisis Management Team (CMT) is designated for those events that are at the crisis level, or have the potential to reach the crisis level.

1.3 Document Control

The IE Vice President for Health, Safety, and Environment (HSE) will maintain responsibility for consistency and currency of the CMP, and notify the appropriate level of managers to ensure proper dissemination to all the stakeholders. This CMP will be reviewed at least annually, and updated as necessary.

1.4 Applicability

This CMP applies to all URS IE operations, and as guidance for the IE CMT for its use in directing activities in preparing for and responding to emergency and crisis situations.

1.5 Scope

This document describes IE emergency preparedness policies and procedures, and covers crisis management organization and responsibilities.

2.0 DEFINITIONS

Crisis: Any global, regional, or local natural or human-caused event or business interruption that runs the risk of (1) escalating in intensity; (2) causing wide-scale harm to people, property, or the environment; (3) adversely impacting shareholder value or the organization's financial position; (4) falling under close media or government scrutiny; (5) interfering with a company critical function; (6) jeopardizing the organization's reputation, products, or offices, therefore negatively impacting its future.

Crisis Management: Intervention and coordination by individuals or teams before, during, and after an event to resolve the crisis, minimize loss, and otherwise protect the organization.

Incident Command Center (ICC): A specific room or facility staffed by IE CMT personnel charged with commanding, controlling, and coordinating the use of resources and personnel in response to a crisis. Not all crises require the use of the ICC.

Crisis Management Team: A group identified by IE senior management and comprised of personnel from such functions as Operations, Human Resources (HR), Information Technology (IT), Facilities, Security, Legal, Administration, Communications, HSE, as well as other business-critical support functions that will lead crisis response efforts when the incident is of such magnitude that it requires senior management involvement. The duties and responsibilities of the CMT are considered collateral duties.

Critical Function: Business activity or process that cannot be interrupted or unavailable for several business days without having a significant negative impact on the organization or its ability to meet contractual deliverables.

Damage Assessment: The process used to appraise or determine the number of injuries and human loss, damage to public and private property, and the status of key facilities and services resulting from a natural or human-caused disaster.

Disaster: An unanticipated occurrence that causes widespread destruction, loss, or distress to an organization, including natural catastrophes, technological accidents, or human-caused events that may result in injuries or fatalities to employees or the public, or significant property damage.

Disaster Recovery: Immediate intervention taken by an organization to minimize further losses brought on by a disaster; and beginning the process of recovery, including activities and programs designed to restore critical business functions, and return the organization to an acceptable condition.

Emergency: An unforeseen occurrence or situation that happens unexpectedly and demands immediate action and intervention to minimize potential injury, loss of life, property, or profitability.

Evacuation: Organized, phased, and supervised dispersal of people from dangerous or potentially dangerous areas.

Incident Management Team (IMT): A Regional, Country, Office, or Project-level group directed by the IE CMT who will lead incident response for incidents occurring in their respective offices or projects, domestically or internationally. The IMT is comprised of personnel from such functions as HR, IT, Facilities, Security, Legal, Administration, HSE, and other business-critical support functions at the office or project level.

Mitigation Strategies: Implementation of measures to lessen or eliminate the occurrence or impact of a crisis event or incident.

Point of Contact (POC): A person or team that has been designated by the URS IE office or business groups to be contacted any time an incident occurs.

Recovery/Resumption: Plans and processes to bring an organization out of a crisis that resulted in an interruption. Recovery/resumption steps should include damage and impact assessments, prioritization of critical processes to be resumed, and return to normal operations, or to reconstitute operations to a new condition.

Response: Executing the CMP and resources identified to perform those duties and services to preserve and protect life and property, as well as provide services to the surviving population. Response steps should include potential crisis recognition, notification, situation assessment, and crisis declaration, CMP execution, communications, and resource management.

Tabletop Exercise: A test method in which participants review, discuss, and practice the actions they will take in the event of CMP activation.

3.0 CRISIS MANAGEMENT ORGANIZATION

3.1 Purpose

The IE President will designate and assign a CMT to conduct and manage Emergency Preparation and Crisis Management activities. The CMT is the central POC for information collection, support, and distribution for official correspondence and information during all hours of operation, and is typically comprised of members of the Executive Management Team or their designees. The CMT will communicate with and provide support to all domestic and international offices and projects on all matters related to an emergency crisis situation in their respective areas. Operations may be called upon by the CMT to assist, support, and respond as necessary.

3.2 CM Roles and Responsibilities

3.2.1 IE President

The outcomes of incidents and problems encountered by the CMT and the IMT may influence future policies and strategies. Therefore, the IE President will be kept informed and updated at all times in the

event of any significant incidents. The IE President should be updated daily at pre-determined times on the progress of response efforts in the event of an incident activating the requirements of this CMP. The CMT Lead will keep the IE President informed, and coordinate communications internal to URS Corporate.

3.2.2 Crisis Management Team

The CMT is led by the designated Crisis Management Team Leader. The CMT Lead manages IE incidents falling under the purview of this CMP, and reports to the IE President.

Responsibilities include:

- Monitoring and managing any incident reported to them.
- Ensuring implementation of IE policies consistent with this CMP.
- Reporting to the IE President on a daily basis, or at a frequency warranted by the situation throughout the incident.
- Maintaining accurate records of CMT proceedings.
- Providing and/or directing crisis management training, in coordination with Human Resources and HSE.

3.3 CMT Purpose and Scope

The CMT has overall responsibility for overseeing the development, maintenance, and implementation of the CMP. All CMT members ensure that current copies of the CMP are kept in secure locations, and that all authorized CMT personnel are trained to use and implement it as needed. The responsibilities of the CMT are:

- Establish, define, and implement IE policies, plans, and procedures.
- Distribute EP/CM policies, plans, procedures, and guidance to domestic and international offices/projects.
- Activate the IE Incident Command Center and implement the CMP when necessary.
- Manage emergencies to resolution.
- Authorize/implement domestic and international support as required.
- Assist offices/project with necessary resources for incident response.

3.3.1 CMT Leader

The CMT Leader will:

- Oversee the IE Crisis Management program.
- Direct the implementation of EP/CM policy decisions.
- Activate the CMT when warranted.
- Identify and assign CMT members with concurrence from the IE President.
- Convene CMT meetings as required.

- Establish primary objectives for the CMT in management of the incident.
- Establish communications and meeting schedules for the CMT.
- Maintain situational awareness of the incident for use in planning, operational support, and briefings.
- Respond and track responsiveness to resource needs from the IMT members.
- Identify costs for incident management and potential impacts.
- Require that all offices and projects conduct emergency preparedness and response training and exercises.
- Release approval for communicating emergency announcements to employees, in coordination with Corporate Communications.
- Release approval for communicating with the media or general public in an emergency.
- Review and approve debriefing meeting minutes and critique emergency response reports following an emergency drill or actual incident.
- Oversee lessons-learned reports of drills or incidents, and implement correction actions.
- Establish and communicate the location/time for CMT meetings to key personnel.
- Brief individual CMT members as needed.
- Keep the IE President informed and coordinate communications internally between IE and URS Corporate.

3.3.2 Group General Managers/Vice Presidents

The Group Vice Presidents will:

- Ensure that each Office, Region, and Country has implemented an emergency/crisis notification system; the notification system will provide for reporting of significant incidents from offices/project sites through to the Regional Managers and Group Vice President.
- Notify the CMT Leader and IE President as appropriate of significant incidents.
- Ensure that all operations have an effective system for informing employees regarding emergencies/crises, and the status of the employees' work location.

3.3.3 Communications

The Communications Lead will perform the following tasks through the CMT or Incident Command Center:

- Assess and identify communication needs.
- Establish and control communications between the CMT and the projects.
- Identify and establish a liaison with influential members of the local communities and media personalities who may help control incident coverage, and assist in releasing public statements.
- Monitor national and international media coverage.
- Control media responses related to any emergency/crisis.

- Discuss and approve media-release information with the IE President.
- Prepare press release(s), media advisories, and statement(s).
- Manage release of information to internal and external sources.
- Ensure confidentiality and verify accuracy of sensitive information before dissemination.
- Monitor and record external and third-party media coverage.
- Maintain records of any/all notifications of media, government representatives, and internal sources.

3.3.4 Security

The security role will vary with the type of crisis. Security will provide primary support in regard to crises involving political instability, personnel evacuation, and kidnap/hostage situations. The Security Lead will perform the following tasks as a member of the CMT:

- Provide information regarding the ongoing security situation at the crisis location.
- Recommend best practices in minimizing security risks to employees/subcontractors.
- Serve a lead role in communications with local law enforcement.
- Coordinate/obtain crisis location security contractors (if needed).
- Provide evacuation options for crises involving political unrest.

3.3.5 Health, Safety, and Environmental

The HSE Lead will:

- Provide assistance and support to the CMT Leader for all health, safety, and/or environmental–related activities.
- Review the safety plan for incident response activities involving IE staff or subcontractors.
- Coordinate with the IE Occupational Health Nurse and workers' compensation provider regarding the management of injured IE employees.
- Lead or assist in incident investigations/root-cause analyses of incidents involving serious employee injuries or fatalities.
- Lead the communications with safety or environmental regulatory agencies (e.g., U.S. Occupational Safety and Health Administration, UK HSE Executive) in coordination with IE Legal and Operations.

3.3.6 Finance and Administration

The Administration Lead reports to the CMT Leader, and will:

- Provide financial support to the CMT Leader.
- Provide financial impact data to the CMT Leader.
- Provide logistical support to the CMT Leader.
- Provide facilities, space, and infrastructure (telephone, computer network, power, water, food, etc.) for emergency operations.

- Maintain records of all costs associated with a crisis.

3.3.7 Human Resources

HR is responsible for:

- Providing HR support to the CMT Leader.
- Providing access to the employee database.
- Obtaining additional internal or external HR resources.
- Managing family notifications.
- Maintaining POC for impacted employees/families.
- Coordinating employee benefits (e.g., medical, life insurance).
- Coordinating and activating the Employee Assistance Program.

3.3.8 Legal

The Legal Lead will provide legal counsel to the CMT Leader, including:

- Assessing the legal impact of the actions to be taken by the CMT.
- Providing a legal review of communications related to the crisis.
- Arranging external legal support as needed.
- Coordinating notification of insurance broker and insurer of possible claims.
- Managing any legal proceedings resulting from the incident.

3.3.9 Information Technology

The IT Lead will:

- Provide IT support to the CMT Leader.
- Oversee continuity of IT operations.
- Ensure the IT Disaster Recovery Plan is developed and tested.

3.4 Crisis Management Team Meetings

- The CMT Leader will initiate meetings with members of the team when it is determined there is a crisis or potential crisis.
- Due to the physical locations of team members, the CMT meetings will typically be held via conference call or video conference. For many crisis situations, daily calls or twice-daily calls are effective.
- The Central Command Center (CCC) will be activated for longer-term crisis situations, incidents with extensive media attention, and crises managed most effectively from one location.
- The meeting content will change as the crisis progresses. Initially, the focus will be on basic incident information (listed in Attachment A).

4.0 TRAINING

All IE employees involved in emergency and/or crisis management will be trained for their specific responsibilities. Annual exercises will be conducted to ensure our ability to respond appropriately to emergencies/crises that affect our employees, customers, and property.

5.0 CENTRAL COMMAND CENTER

The CCC is a centralized management center for emergency operations. The CCC will be established in an area with sufficient workspace for the CMT to operate.

5.1 Primary Location

The primary CCC is at the URS Corporate office in San Francisco, California.

5.2 Alternate Location

The Alternate Crisis Command Center (ACCC) is at the URS New York City office, in the event that the primary CCC is impacted by the crisis event.

5.3 CCC Requirements

The Command Centers will have the following capabilities:

- Communications – an emergency communications system that will not be incapacitated by internal or external system demands. The center will have backup communications (e.g., Blackberry, cellular telephones, satellite telephones, etc.).
- Adequate Displays.
- Cable or satellite TV connection.
- Workstations – enough computer laptops to accommodate the CMT. CMT members should bring laptops to the CCC or ACCC to support response operations.
- Personnel – at least three support personnel to update displays, prepare reports, and provide messenger services. One support person per 8-hour shift is adequate.

6.0 INCIDENT RESPONSE

6.1 Planning

6.1.1 Office Locations

Each IE office will maintain a current Emergency Preparedness Plan (EPP), in compliance with URS Safety Management Standard (SMS) 003. The EPP will include the alarm system, reporting procedures for fire and medical emergencies, evacuation routes, personnel assembly points, and coordination with the building operator. The EPP will also include procedures for the most likely natural disasters in the area (e.g., earthquake, hurricane, flooding).

The site-specific EPP will provide details on the communication of incidents to on-site management, including incidents that occur in the office, during travel, or on field projects. The EPP will also provide the plan for management communication to employees in case of temporary office closure, or other critical communication.

6.1.2 Field Projects

Emergency planning will be incorporated into all field project Health and Safety Plans/Safe Work Plans. The level of emergency planning will vary with the project scope, but must include basic incident notification procedures, including contact phone numbers of the appropriate URS supervisor/project manager. The emergency plan will also contain phone numbers for the appropriate emergency response organizations (e.g., fire department, ambulance, spill response).

6.1.3 International Regions

Each International Region will maintain an Incident Management Plan outlining the local role for response to significant incidents within the region or country.

6.1.4 International Travel Security Plan

If an employee is planning to travel to any country not listed in the “Low Risk” countries, an International Travel Security Plan must be prepared in compliance with Policies and Procedures Policy 074.021.

6.2 Incident Notification

URS SMS 049 “Injury/Illness/Incident Reporting & Notifications” provides the initial steps to be taken by employees and line management in regard to incidents, including notifications.

Significant incidents (potential crisis situations) require immediate notification up through the management organization to the CMT Leader. Initial notification of potential crisis-level incidents must include direct voice contact (not voicemail or email); alternates must be contacted if the primary contact is not reached.

6.3 Response Procedures

Response procedures are part of the protocols for each type of emergency. The procedures spell out how the facility will respond to emergencies. Whenever possible, these procedures are bulleted so they can be quickly accessed by senior management, department heads, response personnel, and employees. The procedures describe the actions necessary to:

- Assess the situation.
- Establish objectives, strategies, and tactics to protect employees, customers, visitors, equipment, vital records, and other assets, particularly during the first 3 days.
- Plan for the management of the incident, and the return to normal operations.

Also included in the procedures are the following instructions:

- Warn employees and customers.
- Conduct an evacuation and account for all persons in the facility.
- Manage response activities.
- Activate and operate an ICC.
- Only fight fires if they are small enough to be handled with a fire extinguisher.
- Sound alarm.
- Shut down operations.
- Protect vital records.
- Restore operations.

7.0 COMMUNICATIONS

The Communications Lead will perform the following tasks through the CMT or ICC.

- Ensure that each operating unit has implemented an emergency/crisis notification system to ensure that all employees are informed of emergencies/crisis, and provide for notification of supervisors, managers, and senior IE Management.
- Prepare and maintain current IE profile, history, and historical incident information.
- Plan for and implement the communications systems necessary for the incident response and management.
- Organize internal emergency communications within IE.
- Assess and identify communication needs.
- Establish and control communications between the CMT and IE Operations.
- Identify and establish a liaison with influential members of the local communities and media personalities who may help control incident coverage, and assist in releasing public statements.
- Monitor national and international media coverage.
- Control media responses related to any emergency/crisis.
- Discuss and approve media-release information with the IE President and URS Corporate Communications.
- Prepare press release(s), media advisories, and statement(s).
- Manage release of information to internal and external sources.
- Ensure confidentiality and verify accuracy of sensitive information before dissemination.
- Monitor and record external and third-party media coverage.
- Establish a diary of events and take minutes of CMT meetings through a recorder (administrative employee).
- Maintain records of any/all notifications of media, government representatives, and internal sources.

8.0 POST-INCIDENT RECOVERY

8.1 Resuming Operations

The recovery of facility operations and services will depend on the extent of damage suffered by the operating unit or facility. The IMT will need to prioritize activities that can be accomplished with available staff and resources. Immediately following the emergency phase of the incident, the IMT and facility management will begin the implementation of the facility-specific business continuity/recovery plan.

8.1.1 Documentation Requirements

Documentation of emergency activities is of critical importance following the emergency situation. All records and forms used during the incident to document activities must be retained for future reference.

8.1.2 Responsibility for Incident Documentation

Following an emergency situation, the IMT will have the responsibility for collecting all records and forms used during the incident. The emergency situation must be investigated as soon as possible following its occurrence. The investigation is designed to determine why the incident occurred, and what precautions can be taken to prevent a recurrence.

8.2 Investigation Responsibilities

Each IMT Leader is responsible for ensuring that an incident investigation is conducted following emergency situations that occur at their facility.

8.2.1 Damage Assessment

Following the incident, an assessment of damage to facility properties and equipment must be conducted. The major goal of this assessment will be to determine the extent of damage to facilities, safety hazards resulting from the incident, and repairs that must be initiated to minimize further damage and restore the facility for operational use. The IMT Leader will have the primary responsibility for conducting the damage assessment following an incident.

8.2.2 Critique

The critique of the incident is a review of what actions took place during the incident—both good and bad. A critique is not designed to place blame, but rather to allow for the flow of ideas and recommendations to improve the emergency action plan and the facility policies and procedures. After a crisis, an IMT meeting is required to ensure all necessary actions have been taken to control, resolve, and end the crisis. The IMT members will identify additional actions required to eliminate/minimize the development of a similar future crisis. The IMT members will prepare a full report of the crisis, which will include:

- A listing of incidents and activities.
- Incident response activities.
- Major decisions.
- Overall summary of activities and critique of the total operation.

- Recommendations for reducing the risk of a repeat event.

The incident report will be shared with senior management in URS IE.

The critique should serve to improve the ability of IE to plan for and respond to emergency situations. "Lessons Learned" should be considered in planning and practice simulations by the CMT and IMTs.

9.0 EMPLOYEE/FAMILY SUPPORT

Some employees and family members may be profoundly impacted by the events surrounding the incident, especially those involving injuries or loss of life. It may be necessary to provide critical-incident stress-debriefing sessions following such incidents, using services provided by either our Emergency Assistance Program provider, or another qualified subcontractor. The CMT will determine if a requirement exists to activate the ACCC in Las Vegas, Nevada, from which trained Family Assistance personnel can respond. The ACCC will coordinate with Human Resources and provide or arrange for:

- Services to aid in the resolution of personnel problems and emergency situations as they arise (i.e., suicide and homicide threats, hostile expressions, demonstrations of irrational behavior).
- Establishing counseling services for employees, family members, and groups affected by the crisis.
- Arranging transportation for employees/family members as necessary to hospitals where injured family members may be hospitalized.
- Repatriation of remains.
- Return of personal property to family members.
- Restoration and return of personal effects to family members.

ATTACHMENT A – INITIAL RESPONSE CHECKLIST

- ☐ **Briefly assess the magnitude of the incident (e.g., injuries, fire, environmental spill, earthquake).**
- ☐ **Follow the available Emergency Preparedness Plan; contact needed emergency services: (e.g., police, fire, ambulance).**
- ☐ **Initiate site control as appropriate: shutting down operations/evacuation from hazardous areas.**
- ☐ **Provide first aid to injured.**
- ☐ **Make certain all employees are accounted for.**
- ☐ **Ensure that any incident evidence is protected.**
- ☐ **Communicate situation to Operations Management and HSE.**
- ☐ **Contact URS support organization as needed: HR, Corporate Communications, Legal, Security, HSE, IT, Occupational Nurse.**
- ☐ **Project Manager/Client Account Manager to notify client (as appropriate).**
- ☐ **Assure Regional Manager is aware of significant incidents.**
- ☐ **Incident documentation (i.e., witness statements, photos).**
- ☐ **Update employees: incident status, return to work schedule, not communicating with the media, employee questions.**
- ☐ **Recovery/Restore Operations.**

NOTES:

_____

_____

_____

_____

_____

ATTACHMENT B – TELEPHONE THREAT CHECKLIST

Exact time of call: _____ AM ☐ PM ☐

Date of call: _____

Exact words of caller _____

(use back if necessary): _____

_____

How long did the conversation take? _____

Did they say they would call back? _____

When? _____

On what number? _____

Questions to ask if for a bomb threat:

When is the bomb going to explode? _____

Where is the bomb? _____

What does it look like? _____

What kind of bomb is it? _____

What will cause it to explode? _____

Did you place the bomb? _____

Why? _____

Where are you calling from? _____

What is your address? _____

What is your name? _____

Caller's Voice *(check box)*

Calm	☐	Disguised	☐	Nasal	☐	Angry	☐
Broken	☐	Stutter	☐	Slow	☐	Sincere	☐
Lisp	☐	Rapid	☐	Giggling	☐	Deep	☐
Crying	☐	Squeaky	☐	Excited	☐	Stressed	☐
Accent	☐	Loud	☐	Slurred	☐	Normal	☐

If the voice is familiar, who does it sound like? _____

Describe background noises: _____

Remarks: _____

Person receiving call: _____

Telephone number call received at: _____

Incoming telephone number (if available): _____

Report call immediately to the Incident Management Team (IMT) Leader

Building evacuated? : YES ☐ NO ☐

Police notified? : YES ☐ NO ☐

ATTACHMENT C – IE CRISIS MANAGEMENT TEAM CONTACT LIST

[Contact List maintained by Vice President HSE]

URS SAFETY MANAGEMENT STANDARD

Confined Space Entry

1. Applicability

This standard applies to the operations of URS Corporation and its subsidiary companies.

2. Purpose and Scope

This standard is intended to protect personnel from the hazards associated with confined space entry.

A confined space is:

1) Large enough for personnel entry,

2) Has limited or restricted means of entry or exit, and

3) Is not designed for continuous occupancy.

3. Procedures

The associated implementing regional procedures for this standard are included as attachments:

SMS 010 NA – North America

SMS 010 INT – International Operations (including Europe, Asia, South America and Africa

SMS AP7-010 – Australia / New Zealand

URS SAFETY MANAGEMENT STANDARD

Confined Space Entry

1. Applicability

This standard applies to URS Corporation and its subsidiary companies where confined space entry operations are performed by URS or any contractor and/or subcontractor on URS projects.

2. Purpose and Scope

The purpose of this standard is to protect personnel from the hazards associated with confined space entry.

A confined space is defined as follows:

A. It is large enough and so configured that personnel may bodily enter and perform assigned work.

B. It has limited or restricted means for entry or exit.

C. It is not designed for continuous occupancy.

A non-permit space is a confined space that presents no existing or potential hazards, nor will the work performed or natural environment therein create a hazardous condition.

A permit-required space is a confined space that may present one or more potential hazards. A permit-required space may be changed to a non-permit space if all known and potential hazards are eliminated.

An alternate entry space is a confined space that was initially classified as a permit-required confined space, but has atmospheric hazards that can be completely controlled only through ventilation.

Entry into a non-permit, permit-required, or alternate entry confined space occurs whenever any body part crosses the plane of entry of the space. Note: All confined spaces will be considered to be permit-required spaces until further investigation reveals the nature and extent of the hazards.

3. Implementation

Implementation of this standard is the responsibility of the URS manager directing activities of the facility, site, or project location.

4. Requirements

A. Determine whether a confined space is present and, if so, whether entry is required. Where a confined space has been identified but will not be entered, take positive measures to prevent entry, including setting up barriers and posting signs and warning labels.

B. Where confined spaces are present and must be entered, determine the type of confined space present. A decision flow chart to assist in determining the type of confined space present is provided in Supplemental Information B.

Determining the type of confined space will require a thorough evaluation of the actual and potential hazards associated with the confined space. Common hazards associated with confined space entry include, but may not be limited to, atmospheric hazards, thermal hazards, chemical hazards, mechanical force, electrical hazards, and engulfment. Refer to Supplemental Information A for definitions of common confined space terminology, including hazards.

C. Permit-Required Confined Space Entry

1. Requirements of the Entry Supervisor:

a. Conducts an assessment of confined space locations within the facility, gathering information about the spaces within the project boundaries. When the project is located within the boundaries of a client site, the Entry Supervisor will contact the facility representative to gather information about the confined space and to determine whether the facility has any entry requirements that must be followed.

b. Performs a hazard evaluation using the Confined Space Entry Permit – Attachment 010-1 NA. More detailed discussion of hazard assessment criteria is provided in Supplemental Information C.

c. Assesses whether those hazards that create the permit-required confined space can be eliminated without necessitating employee entry into the space. By eliminating hazards that are immediately dangerous to life or health, administrative and rescue requirements are lessened and risk to workers is reduced.

d. Determines rescue requirements for the space.

e. Arranges for Authorized Entrants, Attendants, and rescue service personnel, where required.

f. Identifies all equipment necessary for the job. This may include the following:

   i. Testing and monitoring equipment.

   ii. Ventilating equipment.

   iii. Communications equipment.

   iv. Personal protective equipment.

   v. Lighting.

   vi. Barriers and shields to protect entrants from external hazards.

   vii. Equipment necessary for safe ingress and egress.

   viii. Rescue and emergency equipment.

   ix. Any other equipment required for safe entry and exit from the confined space.

g. Obtains all equipment and verifies that it is functional.

h. Coordinates confined space entry activities with other onsite contractors who may be affected by the entry and provides them with a copy of this written program.

i. Cancels the entry and the permit in the event of an emergency or permit expiration.

2. Space Isolation

   a. Verify that the confined space is emptied, purged, flushed, ventilated with air, or otherwise made free of hazardous substances.

   b. Isolate the confined space as described on the permit. Isolation procedures typically include disconnection or blocking of lines, pipes, or other material conveyances to or through the confined space that may be carrying fuels, liquids, or gases.

c. Isolate and lockout/tagout all forms of potential energy inside the confined space, including the following:

   i. Electrical.

   ii. Mechanical.

   iii. Thermal.

   iv. Pneumatic.

   v. Hydraulic.

d. Develop alternate procedures for protection of entrants for lines that may not be controlled (e.g., lines through storm water or sewer vaults).

e. Open the entry point to the confined space.

f. Provide barricades and post the entrance of the space with a sign stating "Danger Confined Space Do Not Enter" or equivalent wording.

3. Electrical Equipment

   a. Provide electrical equipment that meets the electrical classification of the area. Refer to SMS 012 – Electrical Safety, for additional information.

   b. Route all portable electrical equipment through ground fault circuit interruption (GFCI) devices.

4. Atmospheric Tests

   a. Calibrate monitoring equipment before and after sampling and record information.

   b. Make initial atmospheric tests of the space with the ventilation OFF.

   c. Attach extension probes or lengths of silicone or similarly inert tubing material to the monitoring equipment to reach the bottom of the space. For horizontal spaces, the probe may need to be attached to a pole.

d. Take atmospheric measurements in several locations (bottom, middle, top, corners), allowing extra response time from the instrumentation to register, especially if a tubing extension is used.

   Consult the monitoring equipment's operating manual to determine the additional response time required.

e. Obtain readings for oxygen first, followed by %Lower Explosive Limit, (%LEL) then for other contaminants of concern (if applicable).

f. Record all results on the permit, and sign and initial where indicated.

g. Determine whether acceptable entry conditions exist with respect to oxygen, %LEL, and other hazardous atmospheres.

h. If unacceptable entry conditions are indicated, correct the limiting condition.

i. If acceptable entry conditions exist, determine times that the monitoring will be repeated or determine whether continuous monitoring will be needed.

j. Monitor continuously for oxygen and %LEL if hot work will be performed in the space.

5. Ventilation

   a. Open as many openings as possible in the space to aid in cross ventilation.

   b. Never ventilate confined spaces with oxygen.

   c. Ensure that air supply for the ventilation equipment originates from a clean source.

   d. Provide five (5) air changes per hour or at least 10,000 cubic feet/minute (cfm) for large spaces.

   e. If a generator is used to provide power, be sure that the exhaust does not enter the space. Carbon monoxide monitoring may be required.

f. Place blower ductwork such that it does not create a hazard by impairing the line of vision of attendants observing space entrants or by blowing contaminants to other workers.

g. Provide at least 2,000 cfm of active exhaust ventilation for each welder or torch operating under a Hot Work Permit within the space.

h. Use fire/explosive proof ventilating equipment that is in compliance with National Fire Protection Association (NFPA) 70, Articles 502 and 503, as applicable when exhausting flammable gases, vapors, and dusts from confined spaces.

6. Authorizing the Permit

   a. The Entry Supervisor personally inspects the work area and signs the permit after confirming that all necessary precautions have been taken and all relevant information concerning the entry parameters is documented on the permit.

   b. Conduct a briefing informing all entrants and attendants of conditions in the space.

   c. Require entrant(s) and attendant(s) to each print their names and sign the permit.

   d. Affix the permit to a location near the space entrance.

7. Entry Operations

   a. Prohibit entry when oxygen-deficient or flammable atmospheres are detected in the space.

   b. Limit entry to Authorized Entrants listed on the permit and only for the purpose stated on the permit.

   c. Require entrants to follow all requirements listed on the permit.

   d. Attach a body harness, if required, to a lifeline. Attach the other end of the lifeline to a fixed point or to a mechanical lifting device outside the space at all times the entrant(s) is in the space.

e. Require that the attendant or attendants remain at the entrance whenever an entrant is inside the confined space. The attendant may not be assigned other duties that may distract him/her from maintaining uninterrupted contact with the entrant(s). The attendant may attend to only one confined space entry at any one time. Each space must have its own attendant.

f. The attendant will order entrant(s) out of the space whenever

   i. A prohibited condition on the entry permit develops.

   ii. The surrounding work area becomes unsafe.

   iii. Any monitoring instrumentation, rescue equipment, ventilation, etc. becomes compromised.

   iv. Possible symptoms of exposure are noted in the entrant(s).

   v. Entrant(s) expresses any type of concern regarding the safety of the entry.

8. Rescue

   a. Require non-entry rescue procedures to be used for every entry, where feasible. Typically, non-entry rescue will require the use of a retrieval line and full-body harness. Mechanical extraction devices, usually consisting of a tripod, winch, and lanyard affixed to the full-body harness, are required for non-entry extraction of personnel from vertical spaces more than 5 feet (1.5 meters) in depth.

   b. Wristlets will not be used for non-entry rescue procedures unless it can be demonstrated that the use of a chest or full-body harness is not feasible or unsafe and that the use of wristlets is the most effective alternative.

   c. Contract for qualified entry rescue services. This may be local emergency services personnel, contract rescue teams, or response teams provided by the host facility. If response teams are provided by the host facility, this must be noted in the health and safety plan and agreed to by both parties.

d. Entry rescue must be staged on site adjacent to the space for the duration of the entry. Ensure that rescue service personnel are provided prior access to all confined spaces to allow for development of appropriate rescue plans and to practice rescue operations, as needed.

e. Entry rescue personnel must be staged at the entry site any time conditions within the confined space are or could become immediately dangerous to life or health (IDLH).

f. URS will not place staff at risk by allowing confined space entry when qualified rescue teams cannot be identified.

9. When the Entry Is Complete

Cancel the permit by obtaining the signature of the entry supervisor and recording the time and date on the permit. This should be accomplished after the space is resealed, and signs and barricades are removed. If the space cannot be closed until a later time, provisions must be maintained (barricades, warning signs) to discourage persons from entering the space.

D. Non-Permit Confined Space Entry

1. Reclassification of a Permit-Required Confined Space

a. The first step toward reclassification of a permit-required space as a non-permit space is to eliminate all its hazards without entering the space. If this is not practical and it becomes necessary for an employee to enter a permit-required space in order to eliminate its hazards, the entry must occur in accordance with the written permit-required confined space program.

b. If the space requires cleaning, determine whether cleaning activities performed in the space would create a hazardous atmosphere. Determine whether activities outside the space would negatively affect the atmosphere inside the space. If not, the space may be reclassified as a non-permit space.

c. Permit-required spaces with actual or potential atmospheric hazards that can be controlled but not eliminated by ventilation cannot be downgraded to non-permit spaces. The control of atmospheric hazards using forced air ventilation does not constitute elimination of those hazards

and thus cannot be used to downgrade a permit-required space to a non-permit space.

2. Space Reevaluation

   If hazards arise within a space that had been classified as a non-permit space, each employee in the space must immediately exit the space. The space must then be evaluated to determine whether it should be reclassified as a permit-required space.

3. Recordkeeping

   To document that all hazards in a non-permit space are eliminated, a Non-Permit Required Confined Space Work Form (Attachment 010-2 NA) must be completed. This form must be made available to each employee for review and signature prior to entering the space.

E. Alternate Entry Confined Space Criteria

Alternate procedures for entering permit-required spaces containing atmospheric hazards can be used if it can be demonstrated that forced air ventilation alone will control all hazards in the space.

1. Alternate Entry Criteria

   a. There may be no hazardous atmosphere within the space whenever any employee is inside the space.

   b. Continuous forced air ventilation will be used, as follows:

      i. An employee may not enter the space until the forced air ventilation has eliminated any hazardous atmosphere.

      ii. The forced air ventilation will be so directed as to ventilate the immediate areas where an employee is or will be present within the space and will continue until all employees have left the space.

      iii. The air supply for the forced air ventilation will be from a clean source and may not increase the hazards in the space.

   c. The atmosphere within the space will be periodically tested as necessary to ensure that the continuous forced air

ventilation is preventing the accumulation of a hazardous atmosphere.

d. If a hazardous atmosphere is detected during entry:

i. Each employee will leave the space immediately.

ii. The space will be evaluated to determine how the hazardous atmosphere developed.

iii. Measures will be implemented to protect employees from the hazardous atmosphere before any subsequent entry takes place.

2. Recordkeeping

Monitoring and inspection data are to be documented in writing on the Alternate Entry Confined Space Work Form – Attachment 010-3 NA. When alternate procedures are used for entering a permit-required space, verify that the space is safe for entry and that all required procedures and safety measures have been taken.

F. Audits of the Confined Space Entry Standard

Annual audits of this Safety Management Standard will be conducted in accordance with the procedures set forth in the SMS 068 – Health and Safety Compliance Assurance.

The Project Manager, or his/her designee, will review Entry Permits (if completed) on an annual basis (or more frequently as necessary depending on client requirements and project duration) and document this review by notation on the permits. The purpose of this review is to determine compliance with this SMS and ensure that employees performing entry operations are adequately protected from confined space hazards.

G. Training

Require Entry Supervisors, Entrants, and Attendants to be trained prior to the initial assignment, prior to a change in assigned duties, if a new hazard has been created, or if special deviations have occurred. Suggested baseline training requirements for permit-required and non-permit spaces are provided in Supplemental Information D.

5. Documentation Summary

The following documentation will be maintained in the project file:

A. Entry Supervisor, Authorized Entrant, and Attendant qualifications.

B. Confined Space Entry Permits or Work Forms.

C. Additional Work Permits, as necessary (e.g., Hot Work).

D. Monitoring equipment calibration logs.

E. Lockout/Tagout records (if used).

F. Daily worker briefing records.

6. Resources

A. U.S. Occupational Safety and Health Administration (OSHA) Standard – Permit-Required Confined Spaces – 29 Code of Federal Regulations 1910.146

B. U.S. OSHA Technical Links – Confined Spaces

C. American National Standards Institute/American Society of Safety Engineers – ANSI/ASSE 117.1-2003 – Safety Requirements for Confined Space

D. SMS 012 – Electrical Safety

E. SMS 068 – Health and Safety Compliance Assurance

F. Attachment 010-1 NA – Confined Space Entry Permit

G. Attachment 010-2 NA – Non-Permit Required Confined Space Work Form

H. Attachment 010-3 NA – Alternate Entry Confined Space Work Form

7. Supplemental Information

A. Definitions

B. Type of Confined Space Decision Flow Chart

C. Confined Space Hazard Assessment Criteria

D. Confined Space Training

URS	Health, Safety and Environment **CONFINED SPACE ENTRY PERMIT**	Attachment 010-1 NA Issue Date: October 2000 Revision 7: December 2009

Space to be Entered: _____ Permit No. _____

Location/Description: _____ Purpose of Entry: _____

Authorized Duration of Permit: Date: _____ to: _____

Time: _____ to: _____

PERMIT SPACE HAZARDS (Indicate specific hazards with initials.)

_____ Oxygen deficiency (less than 19.5%)

_____ Oxygen enriched (greater than 23.5%)

_____ Flammable gases or vapors (greater than 10% of LEL)

_____ Airborne combustible dust (meets or exceeds LEL)

_____ Toxic gases or vapors (greater than PEL or TLV)

_____ Mechanical Hazards

_____ Electrical Hazards

_____ Chemical Hazards

_____ Engulfment

_____ Other: _____

EQUIPMENT REQUIRED FOR ENTRY AND WORK
Specify as required:

Personal Protective Equipment: _____

Respiratory Protection: _____

Atmospheric Testing/Monitoring: _____

Communication: _____

Permits: _____

Rescue: _____

Hand/Power Tools: _____

Blocking/Blanking: _____

Other: _____

_____

PREPARATION FOR ENTRY (Check after steps have been taken.)

☐ Notify affected groups of service interruption.

☐ Isolation Methods ☐ Lockout/Tagout ☐ Blank/Blind

☐ Purge/Clean ☐ Inert ☐ Ventilate

☐ Atmospheric Test ☐ Barriers ☐ Other:

☐ Personnel Awareness:

☐ Pre-entry briefing on specific hazards and control methods

☐ Notify contractors of permit and hazard conditions

☐ Other:

☐ Additional Notifications required:

AUTHORIZED ENTRANTS (List by name or attach roster):

RESCUE PERSONNEL / SERVICE RESCUE EQUIPMENT:

Phone Number: _____

Contact Method: _____

Phone Number: _____

Contact Method: _____

AUTHORIZED ATTENDANTS (List by name or attach roster):

ATMOSPHERIC TESTING FREQUENCY:_____

Name of Atmosphere Tester: _____

PERMIT CANCELLED BY (if required):

Date: _____ Time: _____

Reason for Cancellation: _____

_____

Testing	Result	Result	Result	Result	Result	Result	Result
Time (Indicate am/pm)	_____	_____	_____	_____	_____	_____	_____
Oxygen (%)	_____	_____	_____	_____	_____	_____	_____
Flammability (%)	_____	_____	_____	_____	_____	_____	_____
H_2S (ppm)	_____	_____	_____	_____	_____	_____	_____
Toxic-(Specify)	_____	_____	_____	_____	_____	_____	_____
Cl_2(ppm)	_____	_____	_____	_____	_____	_____	_____
CO (ppm)	_____	_____	_____	_____	_____	_____	_____
SO_2 (ppm)	_____	_____	_____	_____	_____	_____	_____
Temperature ˚F/˚C	_____	_____	_____	_____	_____	_____	_____
Other	_____	_____	_____	_____	_____	_____	_____
Tester Initials	_____	_____	_____	_____	_____	_____	_____

AUTHORIZATION BY ENTRY SUPERVISORS

I verify review of this permit and verify that all necessary precautions have been taken to provide for a safe entry into and work in this confined space.

Printed Name _____ Signature _____ Date _____ Time _____

Printed Name _____ Signature _____ Date _____ Time _____

Printed Name _____ Signature _____ Date _____ Time _____

Printed Name _____ Signature _____ Date _____ Time _____

THIS PERMIT MUST BE POSTED AT THE CONFINED SPACE.

THIS PERMIT EXPIRES AT THE END OF THE SHIFT ON WHICH IT WAS ISSUED.

A NEW PERMIT MUST BE ISSUED FOR WORK THAT CONTINUES INTO THE NEXT SHIFT.

URS	Health, Safety and Environment **NON-PERMIT REQUIRED CONFINED SPACE WORK FORM**	Attachment 010-2 NA Issue Date: October 2000 Revision 7: December 2009

Space to be entered: _____ Location/Description: _____

Purpose of entry: _____ Permit Valid for (Date): _____

Supervisor Authorizing Work: _____ _____
Print Name Signature

Individuals Authorized To Perform Work (Signatures):

_____ _____ _____

_____ _____ _____

I have evaluated the hazards of the above confined space and have determined that there are no hazards present. I have also made the required safety equipment available and instructed the authorized individuals accordingly.

Hazard Evaluator: Date of Evaluation:

ATMOSPHERIC TESTING

Oxygen Deficiency/Enrichment	☐ Yes	☐ No	Results _____	%
H_2S Vapors	☐ Yes	☐ No	Results _____	ppm
Hazardous Vapors/Gases	☐ Yes	☐ No	Results _____	ppm
CO Level Within Limits	☐ Yes	☐ No	Results _____	ppm
Explosive Atmosphere	☐ Yes	☐ No	Results _____	%

The proposed work requires the following:

Safety belt, lanyard and separate lifeline:	☐ Yes	☐ No
Lockout/tagout of mechanical equipment:	☐ Yes	☐ No
Other personal protective equipment:	☐ Yes	☐ No

If Yes, list

_____

_____

Fire protection (if hot work conducted):	☐ Yes	☐ No
Attendant:	☐ Yes	☐ No

Other requirements:

_____

_____

URS	Health, Safety and Environment **ALTERNATE ENTRY CONFINED SPACE WORK FORM**	Attachment 010-3 NA Issue Date: October 2000 Revision 7: December 2009

Space to be entered: _____ Location/Description: _____

Purpose of entry: _____ Permit Valid for (Date): _____

Supervisor Authorizing Work: _____ _____
Print Name Signature

Individuals Authorized To Perform Work (Signatures):

_____ _____ _____

_____ _____ _____

I have evaluated the hazards of the above confined space and have determined that the only hazards present are atmospheric hazards that can be controlled by the ventilation method given below.

Hazard Evaluator: _____ Date of Evaluation: _____

Ventilation Required to Control Atmospheric Hazard:

ATMOSPHERIC TESTING

Oxygen Deficiency/Enrichment	☐ Yes	☐ No	Results _____	%
H_2S Vapors	☐ Yes	☐ No	Results _____	ppm
Hazardous Vapors/Gases	☐ Yes	☐ No	Results _____	ppm
CO Level Within Limits	☐ Yes	☐ No	Results _____	ppm
Explosive Atmosphere	☐ Yes	☐ No	Results _____	%

Comments:

_____

_____

_____

1. **Alternate Entry Confined Space:** A confined space, initially classified as a permit-required confined space that only has an atmospheric hazard that can be completely controlled through ventilation.

2. **Attendant:** A person stationed outside one or more permit spaces. An attendant monitors the location and condition of authorized entrants and performs all other assigned duties listed in the permit space program.

3. **Authorized Entrant:** An employee designated by the employer to enter a permit space. The duties and training for an authorized entrant are specified in the permit space program.

4. **Blanking or blinding:** The absolute closure of a pipe, line, or duct by the fastening of a solid plate (such as a spectacle blind or a skillet blind) that completely covers the bore and that is capable of withstanding the maximum pressure of the pipe, line, or duct with no leakage beyond the plate.

5. **Confined Space:** Spaces large enough and so configured that an employee can bodily enter and perform assigned work; has limited or restricted means for entry and exit, and is not designed for continuous employee occupancy. Confined spaces include, but are not limited to, storage tanks; vessels; manholes; pits; bins; boilers; digesters; ventilation ducts; utility vaults; tunnels; pipelines; trenches; vats; open top spaces more than 4 feet deep, such as pits; tubs; and excavations; or any space with limited ventilation or suspect atmosphere.

6. **Double block and bleed:** The closure of a line, duct, or pipe by closing and locking or tagging two in-line valves and by opening and locking or tagging a drain or vent valve in the line between the two closed valves.

7. **Emergency:** Any failure of hazard control or monitoring equipment, or other event(s) inside or outside a confined space that could endanger entrants within the space.

8. **Engulfment:** The surrounding and effective capture of a person by a fluid (i.e., liquid or finely-divided particulate) substance that can be aspirated and cause death by filling or plugging the respiratory system or that can exert enough force on the body to cause death by strangulation, constriction or crushing.

9. **Entry:** The action by which a person passes through an opening into a permit-required-confined space. Entry includes ensuing work activities in that space and is considered to have occurred as soon as any part of the entrant's body breaks the plane of an opening into the space.

10. **Entry permit:** Permit means the written or printed document that is provided by the employer to allow and control entry into a permit space and that contains the information specified in Attachments III, IV, and V.

11. **Entry Supervisor:** An entry supervisor is an employee, foreman or crew chief that authorizes and/or supervises confined space entry operations. After the initial entry authorization, the duties of an entry supervisor may be passed from one individual to

another during the course of an entry operation. Entry supervisors can serve as attendants or as authorized entrants, so long as they are properly trained.

12. **Flammable Atmosphere:** Any atmosphere that contains a concentration of flammable or combustible material in excess of 10% of the lower explosive limit (LEL) or lower flammable limit (LFL).

13. **Hazardous Atmosphere:** Hazardous atmosphere means an atmosphere that can expose employees to the risk of death, incapacitation, impairment of ability to self-rescue (i.e., that is escape unaided from a permit space), injury, or acute illness from one or more of the following causes:
    1. Flammable gases, vapor, or mist in excess of 10 percent of its LFL.
    2. Airborne combustible dust at a concentration that meets or exceeds its LFL or obscures vision at 5 feet.
    3. Atmospheric oxygen concentration below 19.5 percent or above 23.5 percent.
    4. Atmospheric concentration of any substance for which a threshold limit value (TLV) or a permissible exposure limit (PEL) is exceeded.
    5. Any other atmospheric condition that is immediately dangerous to life or health. The material safety data sheet (MSDS) can provide guidance in establishing acceptable atmospheric conditions when a TLV or PEL is not given.

14. **Hot work permit:** The employer's written authorization to perform operations (for example, riveting, welding, cutting, burning, and heating) capable of providing a source of ignition.

15. **Immediately Dangerous to Life or Health (IDLH):** Any condition that poses an immediate or delayed threat to life or that could cause irreversible and adverse health effects or potentially interfere with an individuals ability to escape unaided from a confined space.

16. **Inerting:** The displacement of the atmosphere in a permit space by a noncombustible gas (such as nitrogen) to such an extent that the resulting atmosphere is noncombustible. This procedure produces an IDLH oxygen-deficient atmosphere.

17. **Isolation:** The process by which a permit space is removed from service and completely protected against the release of energy and material into the space by such means as: blanking or blinding; misaligning or removing sections of lines, pipes, or ducts; a double block and bleed system; lockout or tagout of all sources of energy; or blocking or disconnecting all mechanical linkages.

18. **Line breaking:** The intentional opening of a pipe, line, or duct that is or has been carrying flammable, corrosive, or toxic material, an inert gas, or any fluid at a volume, pressure, or temperature capable of causing injury.

19. **Lockout/Tagout:** A method for keeping equipment from being set in motion and endangering workers. A disconnect switch, circuit breaker, valve or other energy-isolating mechanism is put in the safe or off position, and a written warning is attached to

it. Tagout is always to be used in conjunction with lockout. A device is often placed over the energy-isolating mechanism to hold it in the safe position. A lock is attached so that the equipment can't be energized.

20. **Non-Permit Required Confined Space:** A confined space that does not contain or have the potential to contain any hazard or hazardous atmosphere capable of causing death or serious physical harm.

    If it can be demonstrated that the only hazard posed by the permit space is an actual or potentially hazardous atmosphere and continuous forced air ventilation can safely maintain the permit space, then the space can be considered non-permit required pending satisfactory air monitoring results.

21. **Oxygen-Deficient Atmospheres:** Any atmosphere having less than or equal to 19.5% available oxygen content should not be entered without wearing an approved SCBA, or approved supplied air, full face respirator.

22. **Oxygen-Enriched Atmosphere:** Any atmosphere having 23.5% or more available oxygen content. Oxygen enriched atmospheres will cause flammable materials to burn violently when ignited. Never use pure oxygen when ventilating a confined space. Always ventilate with a clean source of air.

23. **Permit-Required Confined Space (PRCS):**

    Any confined space that has one or more of the following characteristics:

    1. Contains or potentially contains a hazardous atmosphere.
    2. Contains a material that could potentially engulf an entrant such as hoppers and silos for sand and gravel.
    3. Has an internal configuration that could potentially cause an entrant to be trapped or asphyxiated by inwardly converging walls or by floors that slope downward or taper to a smaller cross section.
    4. Contains any other recognized serious safety or health hazard.

    The following can also be characteristics of a confined space:

    1. Unfavorable natural ventilation.
    2. Has potential for toxic or oxygen deficient atmosphere, etc.
    3. Limited openings for entry and exit.
    4. Space is not designed for continuous worker occupancy.

    Permit-Required Confined Spaces may contain or produce dangerous concentrations of airborne contaminants that can cause serious injury or death.

24. **Prohibited Condition:** Any condition in a permit space that is not allowed by the permit during the period in which entry is authorized.

25. **Rescue Service:** The personnel designated to rescue employees from permit spaces.

26. **Retrieval System:** The term "retrieval system" includes equipment-such as retrieval lines, harnesses, wristlets (if appropriate), lifting devices and anchors used for non-entry rescue of persons from permit spaces. Note that a retrieval line differs from a lifeline, which is a type of fall-arrest system.

27. **Self-Rescue:** The act of escaping unaided from a hazardous atmosphere or IDLH situation in a permit space.

28. **Serious Safety Hazard:** Any non-atmospheric hazard that may expose entrants to the risk of death, incapacitation or impaired ability to self-rescue.

    Examples of serious safety hazards include:

    1. Energized and exposed electrical systems
    2. Fall hazards.
    3. Extreme temperatures.
    4. Personal protective equipment that may cause a physical or health hazard or may compromise an individuals' ability to react appropriately to a hazard.
    5. Unguarded mechanical systems.
    6. Performing valve lineups on hazardous systems such as steam, inert gas, and hazardous materials.

29. **Testing:** The process by which the hazards that may expose entrants of a permit space are identified and evaluated. Testing includes specifying the tests to be performed in the permit space.

30. **Toxic Atmospheres:** Toxic atmospheres have poisonous physical effects, which may be immediate, delayed, or a combination of both. Substances such as poisonous liquids, vapors, gases, mists, dusts, fumes, and biological agents in the air should be considered hazardous in a confined space. Hydrogen sulfide and carbon monoxide are the most common toxic agents that can be found in a confined space.

URS	Health, Safety and Environment **TYPE OF CONFINED SPACE DECISION FLOW CHART**	SMS 010 NA Supplemental Information B Issue Date: February 2009 Revision 1: December 2009

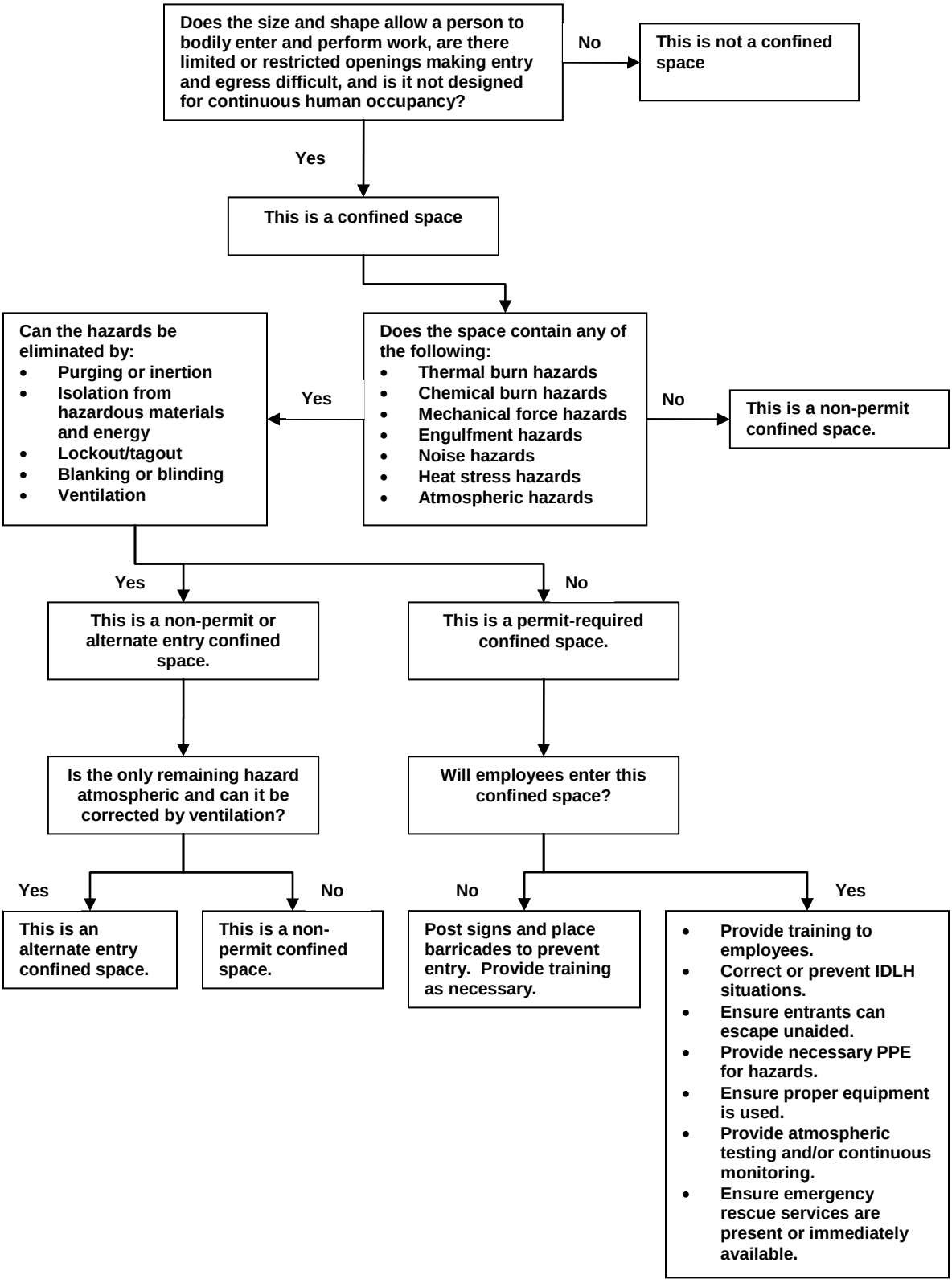

A thorough inspection of a confined space must be performed to verify acceptable entry conditions. This frequently includes a physical inspection not only of the space to be entered, but also of adjacent and connected spaces that might pose a threat to entrants. The hazards of greatest concern are those considered immediately dangerous to life or health (IDLH), which pose one or more of the following threats:

- An immediate or delayed threat to life;
- A threat that would cause irreversible adverse health effects; and/or
- A threat that would interfere with an individual's ability to escape unaided from a permit space.

The major IDLH hazards that workers can encounter when they enter confined spaces include:

- Atmospheric hazards;
- Thermal or chemical hazards;
- Mechanical force or electrical hazards; and/or
- Engulfment in liquids or finely-divided solid particles.

1. ATMOSPHERIC HAZARDS

A hazardous atmosphere in a confined space can expose workers to the risk of death, injury, acute illness, incapacitation or impairment of their ability to escape unaided from the permit space (self-rescue). One or more of the following can cause a hazardous atmosphere:

- A flammable gas, vapor, or mist in excess of 10 percent of its lower flammable limit (LFL).
- An airborne combustible dust at a concentration that meets or exceeds its lower flammable limit (LFL; approximated as a condition in which the dust obscures vision at a distance of 5 feet [1.52 m] or less).
- An atmospheric oxygen concentration below 19.5 percent (oxygen-deficient) or above 23.5 percent (oxygen-enriched).
- An atmospheric concentration of any substance that could result in employee exposure to toxic air contaminants in excess of published exposure limits.
- Any other atmospheric condition that is immediately dangerous to life or health.

2. ATMOSPHERIC TESTING OF CONFINED SPACES

Before entering a confined space, the work environment shall be tested using properly calibrated and approved equipment to determine potential hazards.

1. Oxygen content must be at greater than 19.5 %, and less than 23.5 %.
2. Flammables must be less than 10% of the lower flammable limits of chemicals involved.
3. Toxic gases must be less than the OSHA PEL, ACGIH TLV, or NIOSH REL, whichever is used.

If contamination or generation of toxic hazards is suspected while workers are in a confined space, testing the confined space atmosphere for oxygen content, flammability, and toxic gases will be performed before entry and on a continuous basis.

Testing shall be performed in a manner to ensure detection of heavier-than-air and lighter-than-air contaminants.

Important - If the atmosphere cannot be tested, then it will be considered an IDLH situation. IDLH requires ventilation, purging, or flushing and use of a SCBA or airline respirator.

3. PROCEDURES FOR ATMOSPHERIC TESTING IN CONFINED SPACES

Atmospheric testing is required to evaluate hazards of the permit space and to verify that acceptable conditions exist for entry into that space. The testing of actual or potentially hazardous atmospheres is accomplished by:

1. Safely removing the entrance cover.
2. Guarding the entrance with a barrier.
3. Testing the internal atmosphere with a calibrated, direct-reading instrument, which is listed certified or approved for the use in the hazardous conditions expected, in the following order given:
   a. Oxygen content (lack of oxygen will cause erroneous readings of flammables and toxics).
   b. Flammable gases and vapors.
   c. Potential toxic air contaminants.

   Testing methods are:

   - **Evaluation Testing** - The atmosphere of a confined space should be analyzed using equipment of sufficient sensitivity and specificity to identify and evaluate any existing or potentially hazardous atmospheres, so that appropriate permit entry procedures can be developed and acceptable entry conditions stipulated for that space. Evaluation and interpretation of these data and development of the entry procedure should be performed and reviewed by the project safety representative.
   - **Verification Testing** - Any residual concentrations of contaminants identified in a permit space should be verified to be within the range of acceptable entry conditions. Results of testing (i.e., actual concentrations) should be recorded on the permit.
   - **Testing Stratified Atmospheres** - When monitoring for entries involving a descent into stratified atmospheres, the atmospheric envelope should be tested, at a minimum, every four (4) feet (1.22 meters) in the direction of travel and to each side. If a sampling probe is used, the entrant's rate of progress should be slowed to accommodate the sampling speed and detector response.

     NOTE: Gases have different densities and may stratify in layers. Test spaces before entering and at least at four foot intervals in the direction of travel and side to side.

4. Periodically retest to verify and document that the atmosphere remains within acceptable entry conditions. Retesting shall be done prior to entry of personnel and at the discretion of the Entry Supervisor.

5. Eliminate hazardous atmospheres by continuous forced air ventilation from a clean air source. Testing should be redone periodically to ensure that ventilation is sufficient.

4. OXYGEN-DEFICIENT ATMOSPHERES

Oxygen deficiency (less than 19.5% O_2) within a confined space can be caused when oxygen is:

- Absorbed by other substances, such as activated charcoal.
- Consumed by chemical reactions, such as rusting and burning, or biological processes, such as bacterial decomposition.
- Displaced by another gas, such as when a confined space is intentionally inerted by a nitrogen blanket or other non-reactive atmosphere that contains no oxygen.

Breathing oxygen-deficient air causes poor judgment, loss of coordination, fatigue, vomiting, unconsciousness, and may ultimately lead to death. Asphyxiation from insufficient oxygen frequently occurs when victims, unaware of the problem, reach the point where they cannot save themselves or call for help.

5. OXYGEN-ENRICHED ATMOSPHERES

The atmosphere in a confined space can also have too much oxygen. An oxygen-enriched atmosphere is not an asphyxiation hazard; however, a concentration of oxygen greater than 23.5% in a confined space can be a serious fire hazard, since oxygen-enriched air can cause combustible materials to burn violently.

6. TOXIC ATMOSPHERES

Toxic atmospheres in confined spaces can cause serious health problems and even death. Poisonous physical effects may be immediate, delayed, or a combination of both.

Toxic contaminants can be gases, vapors, fumes, or airborne dusts. The most common gases encountered in confined spaces are carbon monoxide and hydrogen sulfide. Other sources of toxic atmospheres in confined spaces include fuel vapors, protective tank coatings, inerting media, fumigants, and residues from previous tank contents.

7. ENGULFMENT HAZARDS

Engulfment in a confined space occurs when the victim is immersed in liquid or trapped and enveloped by finely-divided dry bulk materials, such as grain or sawdust.

Engulfment hazards include asphyxiation from aspirating (inhaling) the engulfing material, which causes death by filling or plugging the respiratory system. Another

asphyxiating effect of engulfment is compression of the torso by the weight of the engulfing material, preventing the victim's lungs from moving.

8. NOISE HAZARDS

Work performed inside a confined space can be deafening. Scaling, chipping, grinding, hammering, riveting, power scrubbing, the use of power and pneumatic tools, and airline leaks create hazardous noise levels. When work is done inside a vessel, tank, or other space with non-absorbing surfaces, noise increases as it reflects off the walls and floors.

Even ventilation adds sound and noises outside the space, which can sound louder inside a confined space.

9. HEAT STRESS HAZARDS

A tank or vessel can become a health hazard to the entrant if the heat inside is allowed to climb too high. The sun on a metal tank or lack of air circulation and hot work can contribute to an entrant being overcome by heat stress. If pre-entry hazard identification indicates heat stress can become a problem, it is a safe practice to plan periodic temperature testing.

10. ELECTRICAL HAZARDS

The effect of electrical energy is a frequent contributor to confined space accidents. It is difficult in confined spaces to avoid contact with electrical components. An effective lockout/tagout program can prevent nearly all-electrical hazards.

11. FLAMMABLE HAZARDS

Flammable and explosive atmospheres contain gases, vapors, or airborne dusts at concentrations great enough to burn rapidly upon contact with ignition sources such as heat, open flames or electrical sparks. The LFL is the lower limit at which a flammable substance will ignite into sustained combustion.

Changes in oxygen concentrations must also be monitored. While it is not flammable itself, oxygen is necessary for all combustion to take place. Materials that are normally nonflammable, such as clothing, can burst into flames at the smallest spark in a confined space containing a high volume of oxygen.

12. MECHANICAL HAZARDS

The effects of mechanical energy are an also frequent contributor to confined space accidents. An effective lockout/tagout program can prevent nearly all-mechanical hazards.

A confined space has the following characteristics:

- Its size and shape allow a person to enter it.
- It has limited openings for workers to enter and exit.
- It is not designed for continuous occupancy.

A permit-required-confined space has one or more of the following characteristics:

- Contains or has potential to contain a hazardous atmosphere
- Contains a material that has the potential for engulfing an entrant
- Has an internal configuration such that the entrant could be trapped or asphyxiated by inwardly converging walls or by a floor which slopes downward and tapers to a smaller cross-section
- Contains any other recognized serious safety or health hazard.

Some examples of confined spaces are reactor vessels, tanks, silos, boilers, sewers and pipelines.

PERMIT SPACE HAZARD

- Hazardous atmosphere: The air might not have enough oxygen, or might be flammable or toxic
- Entry is defined as placing any part of your body in the permit space
- Engulfment - being trapped in liquid or solid material
- Danger from unexpected movement of machinery
- Electrocution
- Heat stress
- Becoming wedged into a narrow part of the space and suffocating
- Physical dangers such as slips, trips, falls, accumulation of debris, ladders, etc.

Hazards become more serious in a confined space, because rescuers may have a difficult time reaching you if you need help.

The work being done can cause conditions in a confined space to become more hazardous.

- Hot work uses up oxygen and can release hazardous substances. Any hot work in a permit space requires special authorization and a hot work permit.
- Sanding, scraping and loosening residue can stir up hazardous materials.
- Workers sometimes bring hazardous materials, such as solvents, into the permit space.
- Work outside a permit space can produce harmful substances that collect inside.

The confined space entry permit tells us what hazards are in the permit space and how to control them. It usually includes a checklist of necessary safety measures.

Before anyone enters the permit space, the entry supervisor goes through the permit to make sure all necessary hazard controls are in place and signs the permit. Re-evaluation of conditions by the entry supervisor is required at intervals and when a replacement entry supervisor takes over.

GENERAL INFORMATION

Safe confined space entry takes teamwork between the entrant, the attendant and the entry supervisor. Everyone must do his or her part, so that any worker who goes into a permit-required confined space will come out of it in good health.

Although permits vary in size, length and number of conditions covered, complete information is very important.

Permits should include:

- Specific permit space identification
- Purpose and date of entry
- Duration of authorization
- Authorized entrants by name
- Names of authorized attendant and entry supervisor
- Actual hazards of the identified space
- Control and isolation methods to be used
- Acceptable entry conditions
- Results of initial and periodic atmospheric testing
- Rescue and emergency services to be summoned
- Communication procedures authorized between attendant and entrants
- Equipment to be provided
- Other information as necessary
- Other permits, such as hot work.

PREPARATION OF THE PERMIT SPACE

This section lists the steps required to prepare the space before anyone enters it. The entry supervisor checks to see that each required precaution has been taken.

- All departments likely to be affected by service interruption must be notified.
- Post signs and put up barriers to protect entrants from vehicle traffic and pedestrians from falling into the space.
- Blind or disconnect and cap all input lines, so that no hazardous materials can enter the space.
- Make sure no hazardous energy can be released. Follow applicable lock-out/tag-out rules.
- Empty the space of any materials that may be hazardous. If necessary, clean, purge or inert hazardous residue in the space.
- When ventilation is needed, begin long enough in advance so that the air will be safe before anyone enters. Verify breathable atmospheres by measuring oxygen content, flammable gases, etc.
- Assignment and training of entry supervisors, attendants, and entrants is required to comply with the Permit Space Entry Program and Emergency Response Plan.
- Attach completed hot work permit, if required, to Confined Space Entry Permit.
- Add emergency contact telephone numbers.

ATMOSPHERIC TESTING

Test the air in all areas and levels of the space before entry. Monitor continuously or retest periodically for as long as the space is occupied and as is appropriate for the hazard involved.

For most items, allowable limits should be given on the permit. After tests are conducted, results are entered on the permit.

- First, test to make sure the oxygen content is between 19.5 and 23.5%.
- Test the concentration of flammable gases, which must be less than 10 percent of the lower flammable limit (LFL).
- Airborne combustible dust cannot meet or exceed its LEL.

  NOTE: THE CONFINED SPACE IS NEVER ENTERED TO DETERMINE AIR QUALITY UNLESS SCBA OR AIRLINE RESPIRATORS ARE USED.
- Toxicity: List any toxic materials that could be present and their applicable permissible exposure limit. Test to make sure none of these materials has a concentration greater than its exposure limit.
- If the air is unsafe according to any of these tests, the hazard must be controlled before entry is allowed.
- If the air becomes hazardous later on, the permit must be canceled and everyone must leave the space.
- Evaluate for heat stress potential.
- The person performing the atmospheric tests signs or initials the permit after each test result.
- Entrant or their representatives have the right to review all testing data.

EQUIPMENT REQUIRED FOR ENTRY AND WORK

- Appropriate personal protective equipment, such as hard hats, face shields and encapsulated suits must be made available at the site and listed on the permit.
- Decide whether respirators and portable air monitors are required and which types match the hazard.
- If continuous communication between the attendant and entrant will be difficult, choose and list communication devices to be used, such as radios, hand signals, camera equipment, etc. Test this equipment before entry.
- List any special light sources, spark-proof tools and other electrical equipment that must be on hand before entry begins and make sure this equipment is intrinsically safe and in good condition.
- List any measures needed to guard against shock, such as ground-fault circuit interrupters (GFCI), grounding or bonding straps, etc.
- List devices such as ladders, scaffolding and work platforms. Test this equipment before entry begins.

PERMIT AUTHORIZATION

- The entry supervisor types or prints a description of the entry on the entry permit.
- After verifying that acceptable entry conditions exist, the entry supervisor signs and dates the permit.
- Only then are workers allowed to enter the permit space.

EMERGENCY AND RESCUE PROCEDURES

- The safest method of rescue from a confined space when conditions deteriorate is self-rescue, when an entrant evacuates the space with no help at the first sign of trouble, and non-entry rescue.
- Only workers trained in rescue operations or procedures can enter the space for emergency and rescue operations.
- Notify your rescue service in advance of the entry to ensure that they are available for an emergency.
- List the name and phone number of the rescue service for the attendant to use.

ENTRY SUPERVISOR

Any individual empowered by the employer to authorize or to directly supervise entry operations in a permit space is designated an entry supervisor.

The entry supervisor makes sure conditions are safe.

- Before entry, the supervisor verifies that the permit is filled out completely and all safety steps listed on it are taken, then signs the form.
- If conditions become unsafe, the permit is canceled and everyone is ordered out of the space.
- The entry supervisor sees that any unauthorized people are removed.
- Every entry supervisor is responsible for canceling the entry authorization and terminating entry whenever acceptable entry conditions are not present.
- The entry supervisor directly in charge of entry operations at the time the work authorized by the permit is completed must terminate the entry and cancel the entry permit. This includes taking necessary measures for concluding the entry operation and closing off the permit space.
- The entry supervisor on each shift must determine, at appropriate intervals dictated by the hazards and operations performed within the space, that entry operations remain consistent with the terms of the entry permit and that acceptable entry conditions are maintained.
- Whenever responsibility for a permit space entry operation is transferred, the outgoing entry supervisor determines that entry operations are still consistent with the terms of the permit and that acceptable entry conditions are present, before turning operations over to the incoming entry supervisor.

DUTIES OF THE ENTRY SUPERVISOR

Persons acting as the entry supervisor may also serve as authorized entrants or attendants for an entry if they have the proper training.

Each entry supervisor:

- Knows the potential hazards during entry and work
- Determines if acceptable entry conditions are present at a permit space where entry is planned
- Authorizes entry and oversees entry operations
- Terminates entry as required by the OSHA standard
- Verifies that rescue services are readily available and the means for summoning them are operable
- Removes unauthorized individuals who enter or try to enter the permit space during entry and work
- Determines that entry and work operations remain consistent with entry permit terms and that acceptable entry conditions are maintained.

ATTENDANT

The attendant stays at his or her post to observe conditions and support the entrant.

- As an attendant, you must know the hazards of the permit space and the signs of exposure.
- Keep a current count and be able to identify all entrants.
- Stay in continuous contact with the entrants.
- Be sure only authorized people enter the space or the area surrounding the space.
- Order all workers out of the space in any of these situations:
  - You see a condition not allowed by the entry permit.
  - You notice signs of exposure in any entrant.
  - You see something outside the permit space that could cause danger inside.
  - You must focus your attention on the rescue of entrants from another permit space.
- An attendant must never leave the observation post for any reason and remains outside the permit space.
- If the entrants need to escape, call the rescue team at once.
- In case of emergency, do not enter the permit space unless you are trained in confined space rescue, have proper emergency equipment and another attendant is there to replace you.
- Knows behavioral effects of exposure
- Performs no conflicting duties.

DUTIES OF THE ATTENDANT

The attendant continuously maintains an accurate count of authorized entrants in the permit space and ensures that the means used to identify authorized entrants can accurately identify those in the permit space. This requires that the attendant keep track of entrants as they enter and exit the space.

The attendant must know the exact count at all times so that no one is accidentally left in a confined space. During emergencies, an accurate count also ensures that no useless searches are made to find entrants no longer in the permit space.

The attendant must remain outside the permit space during entry operations until relieved by another attendant. Keeping unauthorized persons out of the space, being alert for hazards and providing information to rescue services are three duties requiring the attendant to remain posted until actually replaced by another attendant.

A well-trained attendant always monitors the permit space itself-as well as the immediate areas around the space-to detect potential hazards. Knowing that all attendants have adequate training frees up an entrant's attention for work and ensures the entrant's confidence that hazards will be detected.

The attendant orders entrants to evacuate the permit space immediately whenever the attendant:

- Detects a prohibited condition
- Detects the behavioral effects of hazard exposure in an entrant
- Detects a situation outside the permit space that could endanger entrants in the space
- Cannot effectively and safely perform all the duties required.

The attendant must summon rescue and other emergency services as soon as he or she has any concern for an entrant who may need assistance escaping from permit space hazards.

The attendant takes the following actions when unauthorized persons approach or enter a permit space while entry is underway:

- Warn unauthorized persons to stay away from the permit space.
- Advise unauthorized persons to exit immediately if they have entered the permit space.
- Inform the authorized entrants and the entry supervisor if unauthorized persons have entered the permit space.

Attendants can be permitted to perform any type of rescue, including non-entry rescue, as long as they are still acting as attendants. The attendant can respond to an emergency affecting one or more of the other permit spaces being monitored if it does not distract from the attendant's responsibilities.

The attendant may perform no other duties that might interfere with the attendant's primary duty to monitor and protect authorized entrants.

ENTRANT

The entrant must do his part to control the hazards of confined space entry.

- As an entrant, be sure you know the hazards of the space and the signs of exposure. For example, lack of oxygen can cause:
  - Loss of muscle control
  - Mental confusion
  - Breathing difficulty
  - Misguided feeling of well-being
  - Ringing in the ears

- Death.

- Follow your personal protective equipment training carefully.
- Keep in contact with the attendant, and leave the space at once if you are ordered to evacuate.
- Always be ready to evacuate quickly and, if possible, without help.
- If you see that you are in danger, leave the space and tell the attendant.
- List necessary equipment or devices such as rescue equipment, whistles, phones and radios. Rescue equipment that may be required should be on the job site. Make sure it is in working order before entry begins.
- It is a safe practice to ensure that all affected employees review the company's written Emergency Response Plan before entry.
- Positive-pressure, self-contained breathing apparatus must be available on the site for rescuers if a respiratory hazard is potentially present.
- It is a safe practice to wear an emergency escape breathing system, sometimes called an egress bottle, into a permit space whenever supplied air is required for entry. Should the supplied air fail, your emergency breathing apparatus must provide enough air to allow you to escape to breathable air.

Those of you working in or around confined spaces are aware of the danger. Yet, if you are familiar with pre-entry planning and with simple safety measures, most dangers can be avoided.

DUTIES OF AUTHORIZED ENTRANTS

Authorized entrants must maintain contact with their attendant to improve their chances of safe exit. Such systems as two-way radios, television or other continuous electronic monitoring equipment in combination with alarms and voice contact are considered effective methods of communication between attendant and entrant.

Entrants must communicate with the attendant to enable the attendant to:

- Monitor entrant status, especially subtle behavioral changes in entrant speech or deviation from set communication procedures
- Alert entrants of the need to evacuate the space.

In addition to an entrant's responsibility for self-rescue, the assigned attendant likewise may make an independent decision to terminate entry, based on:

- The entrant's failure to maintain contact
- Changes in the entrant's communications behavior
- Other changes in or outside the space, which endanger the entrant.

Authorized entrants must be trained to alert the attendant whenever:

- The entrant recognizes any warning sign or symptom of exposure to a dangerous situation
- The entrant detects a prohibited condition. A prohibited condition is any condition in a permit space that is not allowed by the permit during the period when entry is authorized.

Authorized entrants must exit the permit space as quickly as possible when:

- An order to evacuate is given by the attendant or the entry supervisor
- The entrant recognizes any warning sign or symptom of exposure to a dangerous situation
- The entrant detects a prohibited condition
- An evacuation alarm is activated

PRE-ENTRY PLANNING

Preparing for entry

- Check for completion of permit.
- Erect barriers around the space.
- Cap, blind or disconnect all input lines.
- Clear and ventilate the space of harmful vapors and residue.
- Make sure all participants understand the Emergency Action Plan.

VERIFYING AIR QUALITY

- Person testing or monitoring must use respiratory protection or test from outside.
- Periodic testing must be continued as long as space is occupied.
- Oxygen level must be between 19.5 and 23.5%.
- Flammable gasses must not exceed 10 percent of LFL/LEL.
- Toxic concentrations must not be over PEL/TLV.
- Test for heat stress with Wet Bulb Globe Thermometer.
- All tests must be complete, accurate and documented before entry.

SAFETY MEASURES

Equipment

- All personal protective equipment and emergency escape breathing systems must be available on site.

Emergency Situation

- Emergency services must be notified well in advance of time, date and place of entrance.
- The attendant may enter only if trained in rescue and if a second attendant is present.

URS SAFETY MANAGEMENT STANDARD

Electrical Safety

1. Applicability

This standard applies to the operations of URS Corporation and its subsidiary companies, where electricity is used, electrical systems are installed or maintained, or where live electrical circuits are accessed. For work around overhead or underground utilities, see SMS 034 – Utility Clearances.

2. Purpose and Scope

This procedure describes requirements for working on electrical circuits with voltage greater than 50 volts. The primary hazards related to electricity are shock, burns, arc-blast, fire and explosions. This procedure is intended to reduce worker risk to electrical hazards.

3. Procedures

The associated implementing regional procedures for this standard are included as attachments:

SMS 012 NA – North America

SMS 012 INT – International Operations (including Europe, Asia, South America and Africa)

SMS AP7-012 – Australia / New Zealand

URS SAFETY MANAGEMENT STANDARD

Electrical Safety

1. Applicability

This standard applies to the operations of URS Corporation and its subsidiary companies for those projects where electricity is used, electrical systems are installed or maintained, or live electrical circuits are accessed. For work in close proximity to overhead or underground utilities, see SMS 034 – Utility Clearances and Isolation.

2. Purpose and Scope

The purpose of this standard is to describe requirements for working on electrical circuits and to reduce worker risk from electrical hazards. The primary hazards related to electricity are shock, burns, arc-blast, fire, and explosions.

Work on live electrical circuits presents hazards of injury due to electrocution and arc flash exposure. Electrocution is a function of voltage (the energy potential) and amps (the amount of energy absorbed through the circuit). The human body can absorb 3 amps with survivable damage to the tissue. At 5 amps, tissue death is nearly immediate. Electrocution may occur with voltage of less than 50 volts. Below that level, electrocution may not cause death. However, even 0.1 amp across the heart (or across the chest or arms, which correlates to current across the heart) can interfere with the heart's function. Individuals who are electrocuted across the chest may be injured in such a way as to stop the heart's function, or stop respiration. If not immediately treated; the heart of an electrocution victim can fail. Electrocution at higher voltages may cause tissue damage or burns. In either mode of electrocution, injury is nearly instantaneous, and death is a frequent outcome.

Arc-flash injury is a result of exposure to the radiation emitted from an electrical spark. An arc flash is typically a very short-duration event (on the order of microseconds), but the heat generated may be four times as hot as the surface of the sun. The radiation emitted by arc flash will cause instant tissue damage. If the eyes are unprotected, the radiation will cause instant blindness.

3. Implementation

Implementation of this standard is the responsibility of the URS manager directing activities of the facility, site, or project location.

4. Requirements

A. Any work performed on live electrical systems of 50 volts or more must be done by a qualified licensed or journeyman electrician or HVAC mechanics. Other personnel who may be exposed to electrical hazards must be trained in and be familiar with safe working practices.

B. Arc-flash protection protocols (see Section L) must be in place any time electricians are working on or near live circuits of 50 volts or more.

C. Personnel must follow established lockout/tagout procedures when performing work on electrical equipment or machinery unless power must be applied for the purpose of adjustment or electrical trouble-shooting. Refer to SMS 023 – Lockout and Tagout Safety.

1. Consider all electrical systems as live until verified as de-energized and grounded.

2. Do not work on or in close proximity to electrical circuits unless the circuit is de-energized, grounded, or guarded.

D. General Safe Work Practices

1. Use rated-load switches or circuit breakers to disconnect electric power and lighting circuits. Non-electrical workers may reset a tripped single-pole convenience outlet or lighting circuit breaker *one time*, provided it is not located in a designated emergency panel, and when, based on their knowledge, it is safe to do so. If the circuit breaker trips again, contact a supervisor to authorize and initiate the next appropriate course of action. Other types of circuit breakers may only be reset by personnel with training and knowledge of the affected systems.

2. Strictly prohibit use of pocket knives and standard box cutters – use wire strippers and cable strippers to strip wire and cable, including high-voltage cable.

3. Equipment must meet the requirements of the National Fire Protection Association (NFPA) and/or National Electric Code (NEC) for these locations, if electrical equipment is used near sources of flammable vapors, such as those identified in Class 1, Division 1 or Class 1, Division 2.

4. Guard and secure lamps and fixtures to preclude injury. Open fluorescent fixtures must have wire guards, lenses, tube guards and

locks, or safety sockets that require force in the horizontal axis to remove the lamp.

5. Protect lamps for general illumination from inadvertent contact or breakage either with a suitable guard or by separation of at least 7 feet from normal working surfaces.

6. Double-insulated portable electric hand tools shall be inspected prior to use for any damage or defects and tagged out of service if the protection is compromised by damage or excessive wear. Double-insulated tools must be marked (usually with standard double-insulated mark on casing).

7. Use low voltage battery powered tools when feasible and practical.

8. Unplug portable electrical hand tools when not in use.

9. Do not use electrical cords to raise or lower equipment.

10. Do not use equipment with frayed cords or three-wire cord ends that have had the grounding prong removed.

11. Use the proper power receptacle for each application. Do not manipulate the cord-end prongs to fit the wrong receptacle.

12. Avoid the use of temporary wiring. Employ appropriate ground-fault circuit interrupters with any temporary wiring, including extension cords used for portable electrical equipment and tools.

13. Do not use extension cords in place of permanent wiring (affixed to structure, run-around poles, under doors, through holes in walls or structure, etc.).

14. Always plug high-current–draw items such as coffee pots, refrigerators, microwaves, toaster ovens, and toasters directly into an approved outlet, never into extension cords or power strips.

15. Plug power strips (surge protectors) directly into an approved outlet, not into other power strips or into extension cords. Only use surge protectors listed by a nationally or internationally recognized testing laboratory. Do not plug loads into these devices that exceed the maximum recommended by the manufacturer.

16. Inspect extension cords and cords on electrical equipment before each use. Take equipment or extension cords with damaged wiring or missing plug prongs out of service until the damage is repaired.

17. Electrical safety interlocks may be defeated only by trained and qualified personnel, and then only temporarily, when directed to do so by an approved procedure or work practice, while working on the equipment. Return the interlock to its operable condition as soon as possible.

18. De-energize circuits immediately if an electrical shock victim is still in contact with electrical energy. If not possible to de-energize the circuit, only trained and qualified employees may attempt to remove the victim. Note: Electrical shocks are medically serious regardless of the voltage. Even if the victim shows no apparent signs of injury, they must be seen by a qualified health care professional.

19. Avoid installing conductors in or removing conductors from raceways containing energized or potentially energized conductors, as a general rule, because of the possibility of conductor damage. If this type of work is unavoidable, identify and lock out/tag circuits, or the task will be considered energized work, and an Energized Work Permit (Attachment 012-1) must be secured.

20. Personnel must remain alert at all times when working near exposed electrical parts or in situations where electrical hazards may exist. Personnel must never reach blindly into areas that may contain live circuits. Personnel must not be permitted to work in areas containing electrical hazards if alertness is recognizably impaired due to illness, fatigue, or other reasons.

21. Employees must not enter an area containing exposed electrical circuits unless adequate illumination is provided. When the illumination or obstructions affect visibility and the employee might contact the exposed circuits or equipment, employee will not perform the task.

22. Do not perform tasks within the Limited Approach Boundary of energized electrical components if lack of illumination or obstructions precludes observation of the work to be performed.

23. Handle conductive materials and equipment in contact with an employee's body carefully so they do not come into contact with

exposed conductors. Conductive material and equipment include, but are not limited to ducts, pipes, tubes, conductive hoses or ropes, metal-lined rules and scales, and steel tapes or chains.

24. Use protective shields, barriers, or insulating materials to protect workers from exposed energized parts that might be inadvertently contacted, or where dangerous electric heating or arcing is likely to occur.

25. Take precautions when work is performed in a confined or enclosed space, such as a manhole or vault, to avoid contact with the energized part. Special training in confined spaces and a confined space entry permit must be obtained before entry.

26. Housekeeping and custodial duties will not be performed adjacent to energized parts where such parts present an electrical contact hazard. Cleaning materials such as water, steam, conductive cleaning fluid, steel wool, metalized cloth, or silicon carbide will not be used in the proximity of energized parts.

27. Workers will not wear conductive apparel (e.g., watches, rings, bracelets, key chains, necklaces, metalized aprons, cloth with conductive thread, metal head gear, wire/metal-rimmed glasses, etc.).

28. Report to supervisor potential electrical hazards or unexpected occurrences during electrical renovation or construction.

29. Do not use equipment that does not meet the requirements of this standard.

E. Hazardous Locations

1. Determine whether electrical equipment and wiring will be installed in locations where any of the following may be present: flammable vapors, liquids, or gases; combustible dusts or fibers; or a concentration or quantity of flammable or combustible material. See Supplemental Information A – Hazardous Locations, for definitions of hazardous locations.

2. Use protective barriers or insulating materials if electrical systems in a confined space cannot be de-energized.

3. If an employee must handle long dimensional conductive objects (e.g., ducts and pipes) in areas with exposed energized systems,

attempts will be made to de-energize the systems. If the systems cannot be de-energized, site procedures will be developed (e.g., use of insulation, guarding, and material handling techniques) which will minimize the hazard.

F. Circuit Interrupters and Grounding

1. Ground-Fault Circuit Interrupters (GFCI)

   a. Provide GFCI protection in wet or extremely damp areas.

   b. Employ GFCI to protect personnel when using portable electric tools and portable electric equipment, including portable lights.

   c. Locate GFCI protection between extension cords and the electrical outlets into which they are plugged.

   d. Provide GFCI for all 120-volt, single-phase, 15- and 20-ampere receptacle outlets on construction sites.

   e. Provide GFCI for all 120-volt, single-phase, 15- and 20-ampere receptacle outlets within garages, bathrooms, kitchens, and shops.

   f. Receptacles on a two-wire, single-phase portable or vehicle-mounted generator rated not more than 5 kilowatts, where the circuit conductors of the generator are insulated from the generator frame and all other grounded surfaces, need not be protected with GFCI.

   g. Test portable GFCI devices by pushing the test button on the device before each use. Permanently mounted GFCI will be tested monthly by pressing the test button.

2. Grounding

   Effectively ground all wiring, electrical circuits, and equipment, except portable tools and appliances protected by an Underwriter's Laboratory (UL)-approved system of double insulation. Note that an equipment conductor grounding program that meets regulatory requirements can be used in lieu of GFCIs. Examples of equipment requiring grounding include:

   a. Portable and vehicle- or trailer-mounted generators.

b. Electrically powered arc welders.

c. Switches.

d. Motor-controller cases.

e. Fuse boxes.

f. Distribution cabinets.

g. Frames.

h. Non–current-carrying rails used for travel, and motors of electrically operated cranes.

i. Electric elevators.

j. Metal frames of non-electric elevators to which electric conductors are attached.

3. Assured Grounding

   Whenever possible, use GFCI instead of assured grounding. Assured grounding programs must be approved by the Regional HSE Manager or HSE Director. Develop a site-specific assured grounding program. Supplemental Information C – Assured Grounding Guidelines, may be used to develop a site-specific program.

G. Circuits

1. Require that there are no missing blanks.

2. Close doors to circuit and fuse boxes when not in use.

3. Label every circuit located on a circuit breaker/fuse box, and/or motor-control center (MCC).

H. Temporary Wiring, Electrical Tools, and Extension Cords

1. Require that temporary wiring is installed and used in accordance with regulatory requirements; specifically:

   a. Guard, bury, or isolate temporary wiring by elevation to prevent accidental contact by workers and equipment.

b. Require that vertical clearance above walkways is not less than 10 feet (3 meters) from circuits carrying 600 volts or less.

c. Support all exposed temporary wiring on insulators.

d. Protect temporary wiring from accidental damage.

e. Guard live parts of wiring.

f. Mark temporary power lines, switch boxes, receptacle boxes, metal cabinets, and enclosures around equipment to indicate the maximum operating voltage.

2. Require that lighting strings are installed and used in accordance with regulatory requirements; specifically:

   a. Provide adequate light throughout the building and in all work areas throughout the project, particularly passageways and stairways, and wherever necessary to avoid a hazard due to lack of light. Consideration should be given to the selection and placement of lights that will provide minimum glare, eliminate harsh shadows, and provide adequate illumination to work efficiently and safely. Ensure lighting is available at all times when employees are in the work area.

   b. Use nonconductive lamp sockets and connections permanently molded to the conductor insulation.

   c. Require that lighting strings have lamp guards, except where the construction of the reflector is such that the bulb is deeply recessed.

   d. Promptly replace all broken or defective bulbs. Exposed empty light sockets are prohibited.

   e. Protect all lights used for illumination from accidental contact or breakage.

   f. Ground metal-case sockets.

3. Require that extension cords are installed and used in accordance with regulatory requirements, specifically:

a. Use only 3-wire grounded-type extension cords designated for hard service or extra hard service and listed by UL.

b. Check cords for damage before use and daily thereafter.

c. Do not exceed the rated load.

d. Use extension cords of adequate length. “Daisy chaining” of cords is prohibited unless specifically allowed by the cord manufacturer.

e. Do not use spliced cords.

f. Destroy and discard worn, damaged or frayed cords and cords with the ground prong removed or rendered ineffective shall be removed from service for repair and retesting.

g. Cord set repairs shall be performed by a qualified electrician using only UL-listed attachment plugs and receptacle ends of equal service rating. The repaired cord set shall be tested using a three prong circuit tester, a tension tester and an ohm meter prior to being returned to service.

h. Do not fasten extension cords with staples, hang them using non-metallic insulating hangers such as zip-ties.

i. Do not wrap cords or cables around any conductive materials.

j. Protect electrical cords and trailing cables from damage that could create a hazard to employees or other persons in the area.

4. Inspect portable electric tools brought onto the site to ensure that they are in good condition. Inspect portable cord- and plug-connected equipment for external defects and evidence of possible internal damage before use on any shift.

I. Work On or Near Energized Hazards

1. Two qualified personnel and an Energized Work Permit (Attachment 012-1) must be present for work on or near energized hazards, except for authorized troubleshooting with approved testing equipment or verifying de-energization during lockout/tagout.

a. Work is considered to be "on or near" whenever any of the following conditions occur:

   i. Any part of the body, regardless of the level of PPE protection, enters or is inadvertently placed within the Restricted Approach Boundary, based on the maximum potential voltage involved.

   ii. Any tool or piece of equipment (insulated or not) enters or is inadvertently placed within the Restricted Approach Boundary, based on the maximum potential voltage involved.

b. If URS retains a subcontractor to perform work on live electrical systems, the subcontractor will advise URS (or URS' client) of:

   i. Any unique hazards presented by the contract employer's work.

   ii. Any unanticipated hazards found during the contract employer's work that the host employer did not mention.

   iii. The measures the contractor took to correct any hazards reported by URS to prevent such violation from recurring in the future.

2. Obtain an Energized Work Permit (Attachment 012-1) for all work, even non-electrical work, within the restricted approach boundary.

   a. Work "on or near" live equipment as defined above is permitted only when it is impossible to shut off the equipment or circuits; or when de-energizing the equipment would introduce additional or increased hazards; or is infeasible due to equipment design or operational limitations. Examples of situations that would meet the requirements of "increased or additional hazards" include interruption of life safety equipment, deactivation of emergency alarm systems, shutdown of hazardous location ventilation equipment, or removal of illumination from a large area.

   b. Retain a copy of the Energized Work Permit both at the work site until work is completed in the office/project file. The Energized Work Permit provides documentation of the

justification for working the circuit or equipment energized; identifies the specific personnel who are to perform the work and the specific PPE requirements for the task; defines the scope of the task; and details additional special protective and work practices required to protect both the workers and other personnel in the area. The permit must be authorized by a member of management.

c. ANSI-approved voltage-rated tools must be used any time the plane of the cabinet, vault, box, or opening is breached if *all* exposed live components of 50 volts or greater in a cabinet, vault, box, or other piece of electrical equipment are not completely de-energized through lockout/tagout.

d. Full PPE must be worn, based on maximum potential voltages as defined in Section 3 below, as well as the use of ANSI-approved and voltage-rated tools, which are rated for maximum voltages, that may be encountered during metering, even though metering during authorized troubleshooting is not considered “working on or near.”

3. Approach Boundaries for Live Parts

The approach boundaries listed below will be used to define Energized Work Permit requirements, tool and equipment requirements, and PPE requirements by employees:

a. Flash Protection Boundary: Workers within this boundary must use arc-flash protection for all parts of the body when work is being performed that could lead to an arc flash. Arc-flash protection boundaries are presented in the table below. Flash-protection boundaries at voltages above 600 volts will be calculated following NFPA 70E on a case-by-case basis using the formula found in NFPA 70E, paragraph 130.3 (A), or applying the maximum level of protection recommended in Table 130.7(C)(9)(a), based on the work being performed.

b. Limited Approach Boundary: The limited approach boundary establishes an area around exposed energized hazards of 50 volts or greater where unqualified employees must be escorted and directly supervised by a qualified employee. Use insulated, voltage-rated, ANSI-approved tools based on the maximum voltage within this boundary. Limited

approach boundaries are presented in the table below (refer to NFPA 70E for higher voltages).

c. Restricted Approach Boundary: The restricted approach boundary establishes an area around exposed energized hazards of 50 volts or greater where unqualified employees are prohibited, and insulated tools and full PPE are required, based on the maximum voltage. A worker is considered to be working "near" energized systems when any part of the body or tool could approach an energized component closer than the distances discussed below. An Energized Work Permit is always required in these cases, except during troubleshooting with approved testing equipment. Restricted approach boundaries are presented in the table below (refer to NFPA 70E for higher voltages).

d. Prohibited Approach Boundary: The prohibited approach boundary establishes an area around exposed energized hazards of 50 volts or greater where approach within the boundary is considered "working on" an energized system. A worker is considered to be "working on" energized systems when any part of the body or tool could approach an energized component closer than the distances discussed below. Unqualified workers are prohibited, and full PPE is required, based on the maximum voltage. An Energized Work Permit is always required in these cases, except during troubleshooting with approved testing equipment. Prohibited approach boundaries are presented in the table below (refer to NFPA 70E for higher voltages).

Nominal System Voltage Range, Phase to Phase[1]	**Flash Protection Boundary**	**Limited Approach Boundary**	**Restricted Approach Boundary**	**Prohibited Approach Boundary**
Less than 50 volts	Not Specified	Not Specified	Not Specified	Not Specified
50 volts – 240 volts	4 ft / 1.22 m	3 ft, 6 in / 1.1 m	Avoid Contact	Avoid Contact
240 volts – 300 volts	4 ft / 1.22 m	3 ft, 6 in / 1.1 m	Avoid Contact	Avoid Contact
301 volts – 500 volts	4 ft / 1.22 m	3 ft, 6 in / 1.1 m	1 ft / 0.3 m	1 in / .03 m
501 volts – 599 volts	4 ft / 1.22 m	3 ft, 6 in / 1.1 m	1 ft / 0.3 m	1 in / .03 m

Nominal System Voltage Range, Phase to Phase[1]	Flash Protection Boundary	Limited Approach Boundary	Restricted Approach Boundary	Prohibited Approach Boundary
600 volts	4 ft / 1.22 m	3 ft, 6 in / 1.1 m	1 ft / 0.3 m	1 in / .03 m
601 volts – 750 volts	CN	3 ft, 6 in / 1.1 m	1 ft / 0.3 m	1 in / .03 m
751 volts – 1 kV	CN	5 ft / 1.5 m	2 ft, 2 in / 0.67 m	7 in / 0.12 m
1.1 kV – 7.5 kV	CN	5 ft / 1.5 m	2 ft, 2 in / 0.67 m	7 in / 0.12 m
7.51 kV – 15 kV	CN	5 ft / 1.5 m	2 ft, 2 in / 0.67 m	7 in / 0.12 m
15.1 kV – 17 kV	CN	6 ft / 1.83 m	2 ft, 7 in / 0.82 m	10 in / 0.25 m
17.1 kV – 26.5 kV	CN	6 ft / 1.83 m	2 ft, 7 in / 0.82 m	10 in / 0.25 m
26.51 kV – 36 kV	CN	6 ft / 1.83 m	2 ft, 7 in / 0.82 m	10 in / 0.25 m
36.1 kV – 46 kV	CN	6 ft / 1.83 m	2 ft, 9 in / 0.88 m	1 ft, 5 in / 0.46 m

[1] For single-phase systems, select the range that is equal to the system's maximum phase-to-ground voltage multiplied by 1.732.

CN = Calculation Needed. See NFPA 70E, Annex D – Incident Energy and Flash Protection Boundary Calculation Methods; and choose the appropriate method out of the 5 listed. These calculations must be used only under qualified engineering supervision.

4. Establishing an Electrically Safe Work Condition

   a. Establish an electrically safe work condition before performing work (other than authorized metering as a part of troubleshooting) within the Limited Approach Boundary of exposed electrical hazards.

   b. Performing complete lockout/tagout of all electrical potentials of 50 volts or greater within the cabinet, vault, box, or work area is considered establishing an electrically safe work condition, as long as the lockout/tagout process accomplishes all of the following:

      i. Provides a documented hazard evaluation at the site, including the identification of the person in charge of the lockout/tagout.

      ii. Identifies every source of electrical energy of 50 volts or greater remaining inside the cabinet, vault, and

box, and completely eliminates them through lockout/tagout.

iii. Tests every phase conductor or circuit part with an approved meter (phase-to-phase and phase-to-ground) to verify they are de-energized (meter will be checked before and after each test to confirm it is operating properly).

iv. Applies ground-connecting devices to any part or circuit where there is a possibility of induced voltages or stored electrical energy, including grounding-out of capacitors or similar devices that may hold stored energy.

c. If both locks and tags cannot be installed, employ a second alternative method such as removal of a fuse in addition to a tag. Consider all circuits and equipment energized until an electrically safe work condition has been established and verified.

d. Follow these work practices if an electrically safe work condition as described above has not been established:

i. If the Restricted and/or Prohibited Approach Boundary may be breached, an Energized Work Permit will be secured, and work practices will comply with those required for “working on or near” energized hazards

ii. If the Limited Approach Boundary may be breached, a qualified person must be present and directly supervise the work.

iii. If the Arc-Flash Boundary may be breached and any work is performed that has the possibility of causing an arc flash, all personnel within the flash boundary will be protected with appropriate levels of arc-flash protection.

5. Insulated Tools and Equipment

a. Use ANSI-approved insulated tools and/or handling equipment when working near exposed energized conductors or circuit parts. Protect the insulating materials

on these items during storage or transportation. Use fuse-handling equipment capable of withstanding the circuit voltage when removing or installing fuses from an energized fuse terminal. Allow *only* nonconductive ropes and hand lines near exposed parts.

b. Inspect insulated tools and equipment prior to each use. Include an examination for damage to the insulation or damage that may limit the tool from performing its intended function, or which could increase the potential for an incident. Immediately remove any defective tools and equipment from service.

c. Use insulated tools and insulated equipment when:

    i. Breaking the plane (or opening) of an electrical fixture (cabinet, vault, panel, etc.) where any live voltage of 50 volts or greater remains (including metering for troubleshooting). Cabinet will be considered as containing live voltage until all sources of 50 volts or greater have been completely de-energized through lockout/tagout, and confirmed to be de-energized through metering.

    ii. Any part of the body or a tool or piece of equipment may cross the Limited Approach Boundary for the maximum voltage present.

    iii. All tools used in either case above will be voltage-rated, ANSI-approved tools rated to the maximum voltage hazard present.

d. Insulated tools and equipment will also comply with the following:

    i. Grounding and testing devices will be stored in a clean, dry area and properly inspected and tested before each use.

    ii. Use fuse or fuse-holding equipment to remove or install a fuse if the fuse terminals are energized. Fuse or fuse holder will be rated and insulated for the circuit voltage.

iii. Ropes or hand lines used near exposed live parts operating at 50 volts or greater will be non-conductive.

iv. Fiberglass-reinforced plastic rod and tube tools used for live line work will meet the requirements of ASTM F 711.

v. Portable ladders will have non-conductive side rails. Metal ladders are prohibited in areas where electrical hazards exist.

6. Personal Protective Equipment Requirements

a. Protective equipment requirements outlined in the table below are mandatory when any part of the body or a tool or piece of equipment may be placed within the Restricted-Approach Boundary (Section 1):

i. All personnel must wear the required PPE as outlined in this section until all energy sources of 50 volts or greater within the Restricted Approach Boundary have been completely eliminated through lockout/tagout, and de-energization has been confirmed through metering. The ratings in this section of cal/cm^2 represent arc-flash protection ratings. If protective equipment is not marked with these ratings, it does not meet the requirements of NFPA 70E, and will not be used. Exceptions to these requirements are limited to those specifically addressed under each type of protective equipment.

ii. Maintain protective equipment in a safe, reliable condition, and visually inspect before each use. Gloves shall be leak tested before use. Store protective equipment in a manner to prevent physical damage, and damage from moisture, dust, or other deteriorating agents.

iii. Do not use arc-flash clothing that is contaminated with grease, oil, or flammable liquids or combustible materials or is damaged to an extent where the protective qualities are impaired. Store arc-flash clothing to avoid physical damage; damage from

moisture, dust, or other deteriorating agents; and contamination from flammable or combustible material. Clean following the manufacturer's instructions to avoid loss of protection. If necessary, make repairs using the same flame-retardant materials used in the original garment.

iv. When body protection is required, use all-cotton underclothing (never nylon, polyester or rayon) that contains no metal.

v. Trim, name tags, or logos affixed to flame-retardant clothing must also be flame-retardant rated.

vi. Hairnets and/or beard nets must be of non-melting, flame-resistant design.

vii. Wear Class E hardhats rated for electrical protection when inside any substation or other power transmission and distribution equipment area. Inspect hardhats before use.

Voltage	Required PPE
Less than 50	Eye/Face: ANSI approved safety glasses (non-metallic) with side shields or goggles Body: Long sleeve cotton shirt and cotton pants Hand: Leather gloves Foot: Leather, EH rated footwear Head/Ears: Hard hat, hearing protection (ear canal inserts)
50 to 240 volts	Eye/Face: ANSI approved safety glasses (non-metallic) with side shields or goggles and Arc-Flash Face Shield *or* Arc-Flash Suit Hood (4 cal/cm^2) Body: Flame Retardant long sleeve shirt/pants or coverall (4 cal/cm^2) Hand: EH gloves (Class 00 with leather protectors) Foot: EH rated footwear Head/Ears: Class E Hard hat, hearing protection (ear canal inserts)

Voltage	Required PPE
Above 240 to 480 volts	Eye/Face: ANSI approved safety glasses (non-metallic) with side shields or goggles and Arc-Flash Face Shield and Sock Hood (8 cal/cm^2) *or* Arc-Flash Suit Hood (8 cal/cm^2) Body: Flame Retardant long sleeve shirt pants or coverall (8 cal/cm^2) Hand: EH gloves (Class 00 with leather protectors) Foot: EH rated footwear Head/Ears: Class E Hard hat, hearing protection (ear canal inserts)
480 to 600 volts	Eye/Face: ANSI approved safety glasses (non-metallic) with side shields or goggles and Arc-Flash Suit Hood (8 cal/cm^2) Body: Flame-Retardant long sleeve shirt pants or coverall (8 cal/cm^2) Hand: EH gloves (Class 0 or higher with leather protectors) Foot: EH rated footwear (carbon fiber recommended) Head/Ears: Class E Hard hat, hearing protection (ear canal inserts)
600 volts or above	Eye/Face: ANSI approved safety glasses (non-metallic) with side shields or goggles and Arc-Flash Suit Hood (25 cal/cm^2) Body: 2 Layer Flame-Retardant long sleeve shirt pants or coverall (25 cal/cm^2) Hand: EH gloves (Class 0 or higher with leather protectors) Foot: EH rated footwear (carbon fiber recommended) Head/Ears: Class E Hard hat, hearing protection (ear canal inserts)

7. Hazard Alerting/Control Requirements

   a. Employ special precautions to warn employees of unusual electrical hazards until they are corrected or eliminated. For example, if breakers or breaker blanks are found missing inside a breaker panel, a warning sign will be placed on the panel door that limits access to qualified electricians only until the electrical hazard is returned to compliance with the electrical code.

   b. Use barricades in conjunction with safety signs where it is necessary to prevent or limit employee access to work areas containing live parts. Make barricades of non-conductive design and place so as to prevent access to the Limited Approach Boundary by non-qualified personnel (10 feet for

exposed movable conductors, and 3½ feet for non-movable conductors up to 750 volts).

c. Do not leave exposed energized components unattended and/or unprotected. If signs or barricades cannot assure warning and protection from electrical hazards, station an attendant to warn and protect personnel. Attendants will remain in the area as long as there is the potential for personnel to be exposed to the electrical hazards. Their primary duty is to keep unqualified personnel outside a work area where the unqualified employee might be exposed to the electrical hazard; which at an absolute minimum, is outside the Limited Approach Boundary.

d. Employ additional alerting methods such as signs, barricades, or attendants where work is performed on equipment that is de-energized and placed in an electrically safe condition in a work area with *other* energized equipment that is similar in size, shape, and construction, to prevent employees from entering look-alike equipment.

B. Electrical Protective Equipment Requirements

1. Insulating blankets, matting, covers, line hose, gloves, and sleeves made of rubber must meet the following requirements:

   a. Produce blankets, gloves, and sleeves by a seamless process.

   b. Mark each item clearly with its Class number.

   c. Markings must be non-conductive and not impair the insulating qualities of the equipment.

   d. Confine markings on gloves to the cuff-portion of the glove.

2. Equipment must also meet the specifications contained in the governing ASTM standard outlined in the following table.

Item	Standard
Insulating matting	ASTM D 178-93 (or D 178-88)
Insulating blankets	ASTM D 1048-93 (or D 1048-88a)
Insulating covers	ASTM D 1049-93 (or D 1049-88)

Insulating line hose	ASTM D 105-90
Insulating sleeves	ASTM D 1051-87

3. Do not use insulating equipment with any of the following defects:

    a. Holes, tears, punctures, or cuts.

    b. Embedded foreign objects.

    c. Texture changes, swelling, softening, hardening, or becoming sticky or inelastic.

    d. Any other defect that may damage insulating properties.

4. Clean insulating equipment as needed to remove foreign substances, and store in a location and manner that protects it from light, temperature extremes, excessive humidity, ozone, and other injurious substances and conditions. A thorough visual examination by the worker is always required immediately before each use.

5. Inspect and test rubber insulating equipment as outlined in the following table.

Item	Inspection	Testing by Qualified Agency	Governing Standard for Test Voltage
Rubber insulating line hose	Before each use	Upon indication that the insulating value is suspect	ASTM F 478
Rubber insulating covers	Before each use	Upon indication that the insulating value is suspect	ASTM F 478
Rubber insulating blankets	Before each use	Before first issue and every 12 months thereafter	ASTM F 479
Rubber insulating gloves	Before each use	Before first issue and every 6 months thereafter	ASTM F 496
Rubber insulating sleeves	Before each use	Before first issue and every 12 months thereafter	ASTM F 496

NOTE: In the case of blankets, gloves, and sleeves, if the equipment has been electrically tested but not issued for service, it may not be placed into service unless it has been electrically tested within the past 12 months. In all cases, a process or procedure will be deployed that assures identification and confirmation of inspection currentness for individual pieces of equipment by both the worker and an inspecting/auditing agency.

C. Warning Sign and Marking Requirements

1. A summary of the warning signs and marking requirements for electrical systems and areas contained in industry standards is provided in the table below. Projects must comply with these requirements or provide alternate and equally effective warnings for the Company personnel.

Warning Signs and Markings	
Condition	**Requirements**
Entrance to rooms or other guarded locations containing exposed live parts (600 volts nominal or less).	Post conspicuous warning sign forbidding unqualified persons from entering.
Entrance to buildings, rooms, or enclosures containing exposed live parts (over 600 volts nominal).	Post warning sign reading ***Danger-High Voltage – Keep Out*** or similar language. Entrance must remain locked.
All electrical equipment.	Mark equipment with the manufacturer's name, trademark, or other marking indicating the organization responsible for the product. Additional requirements for marking voltage, current, wattage, or other ratings maybe specified by the NEC.
Disconnection of power sources (including circuit breakers).	Mark each disconnection required for motors, appliances, and each service feeder or branch circuit at the point where it originates to indicate its purpose, unless located and arranged so that the purpose is evident.
Circuit breakers or fuses applied in compliance with Series Combination Ratings.	Mark equipment enclosure to indicate the equipment has been applied with Series Combination Rating. Markings must state ***Caution–Series Rated System Amps Available: Identified Replacement Component Required***.
Exposed live parts of transformers.	Mark with operating voltage.
Fused cutouts not interlocked with the switch to prevent opening of the cutouts under load.	Post conspicuous sign at the cutouts reading ***Warning – Do Not Open Under Load***.
More than one switch is installed with interconnected load terminals to provide for alternate connection to different supply conductors.	Post conspicuous sign reading ***Warning – Switch May be Energized by Backfeed*** **at each switch**.
Fuses potentially energized by backfeed.	Post sign on enclosure door reading ***Warning – Fuses May Be Energized By Backfeed*****.**

D. Power Transmission/Distribution Requirements

1. Develop additional location-specific written procedures that cover site-specific systems and define work practices that meet the spirit and intent of 29 Code of Federal Regulation (CFR) 1910.269 for locations that perform work on power transmission and distributions systems. This Safety Management Standard does not cover all of the work practices necessary to protect personnel in these highly unique and hazardous work conditions.

E. Training

1. Train affected personnel, both those qualified to perform electrical work and those not qualified who may still work on or near energized systems, in the safe work practices outlined in this section on an annual basis. Training may be at different levels for qualified and unqualified, but must be sufficient to afford the electrical safe work practices and hazard recognition knowledge required to safely perform their respective tasks. Training will also cover how a GFCI operates, hazards associated with portable electric power extension cord use, and when GFCI use is required. Affected personnel will also be instructed on how to inspect the specialized PPE required for electrical work prior to being placed in a position where this PPE is required. All personnel will receive training on electrical hazards as part of the job orientation which shall qualify as documentation for unqualified workers. Qualified workers will receive additional training specific to the job and hazards as required.

2. Document all training. Train affected personnel either as “qualified” or “unqualified,” with qualified being at a level sufficient to afford protection during actual electrical work.

3. Qualified personnel are personnel who have also been trained, at a minimum, in the following:

    a. The skills and techniques necessary to distinguish exposed live parts from other parts of electrical equipment.

    b. The skills and techniques necessary to determine the nominal voltage of exposed live parts.

    c. Clearance distances for working near live circuits or equipment.

d. The decision-making process necessary to determine the degree and extent of the hazard, and the PPE and job planning necessary to perform the task safely.

4. Personnel who perform work on electrical circuits must also meet the following minimum requirements:

   a. Have experience servicing the electrical components of the equipment they are assigned to service.

   b. Have experience working on energized electric circuit parts or equipment.

   c. Meet any governing statute or regulatory requirement, host nation, or customer requirement for special certifications or licenses.

5. Personnel who work on power transmission/distribution systems must have additional training and experience that meets or exceeds the spirit and intent outlined in 29 CFR 1910.269. This includes the requirement to identify hazardous tasks not routinely performed, and establish procedures to ensure personnel have performed these tasks within the past 12 months, or that they are re-trained or supervised before performing them. These additional requirements are mandatory before exposure to the hazards. This additional training must be documented.

6. Additional training (retaining) will be performed when personnel are not complying with safety-related procedures or when workplace changes necessitate the use of safety-related procedures that are different that those that the employee would normally perform.

F. Job Briefings

1. Before starting each job, the employee in charge will conduct a job briefing with other personnel involved. The briefing will cover such subjects as a pre-job hazard review associated with the job, work procedures involved, special precautions, energy source controls, and PPE requirements. Use Supplemental Information B – PPE, Tools, and Equipment, as a guide for proper PPE, as applicable. Use SMS 086 NA procedures and appropriate forms in Supplemental Information for conducting Job Safety Analysis or Job Hazard Analysis for each job.

2. If the work or operations to be performed during the work day or shift are repetitive and similar, at least one job briefing will be conducted before the start of the first job of the day or shift. Conduct additional job briefings if significant changes might affect the safety of employees during the course of the work. A brief discussion will be satisfactory if the work involved is routine, and if the employee, by virtue of training and experience, can reasonably be expected to recognize and avoid the hazards involved in the job. A more extensive discussion must be conducted if:

    a. The work is complicated or particularly hazardous; or

    b. The employee cannot be expected to recognize and avoid the hazards involved in the job.

G. Inspect the job site periodically using Attachment 012-2 NA – Electrical Hazard Checklist, to evaluate compliance with this standard.

5. Documentation Summary

The following information will be maintained in the project file:

A. A copy of license for licensed/journeyman electrician for project (as necessary).

B. Completed audits of electrical hazards.

C. Documented communications between URS, contractors, licensed/journeyman electricians, or others.

D. Records of all pertinent electrical work performed on a project, including as-built design updates.

6. Resources

A. U.S. Occupational Safety and Health Administration (OSHA) Standard – General Industry Electrical Safety – 29 CFR 1910, Subpart S

B. U.S. OSHA Standard – Construction Electrical Safety – 29 CFR 1926, Subpart K

C. U.S. OSHA Standard – Design Safety Standards for Electrical Systems – 29 CFR 1910, Subpart S

D. American National Standards Institute/Institute of Electrical and Electronics Engineers – National Electrical Safety Code (NESC), ANSI/IEEE C2-2002

E. National Fire Protection Association, National Electric Code, NFPA-70

F. SMS 023 – Lockout and Tagout Safety

G. SMS 034 – Utility Clearances and Isolation

H. SMS 086 – Managing Health, Safety and Environment Related Risks

I. Attachment 012-1 NA – Energized Work Permit

J. Attachment 012-2 NA – Electrical Hazard Checklist

7. Supplemental Information

A. Hazardous Locations

B. PPE, Tools, and Equipment Needed During Electrical Work

C. Assured Grounding Guidelines

URS	Health, Safety, and Environment **ENERGIZED WORK PERMIT**	Attachment 012-1 NA Issue Date: June 1999 Revision 6: September 2012

INSTRUCTIONS: An Energized Work Permit is required for any work within the Restricted Approach Boundary (1 foot for 50 to 750 volts; 2 feet, 2 inches for 751 to 15kV; see NFPA 70E for higher voltages). An energized electrical work permit is not required under the following two conditions:

1) Work is limited to metering as a part of troubleshooting and the maximum voltage is less than 600 volts; or
2) All potential sources of electrical energy of 50 volts or greater are completely eliminated within the cabinet, vault, or panel through lockout/tagout.

TO BE COMPLETED BY THE PERMIT REQUESTER			
Project/Site Name:		Work Location:	
Description of circuit/equipment:			
Description of work to be done:			
Justification of why circuit/equipment cannot be de-energized, or the work be deferred until scheduled outage:			
Requestor Name:		Requestor Title:	
Requestor Signature:		Date:	

TO BE COMPLETED BY THE ELECTRICAL QUALIFIED PERSONS DOING THE WORK		
1 – Maximum voltage of energized components:		
2 – Required PPE (check range based on maximum voltage)		
☐	50 to 240 volts	• Eye/Face: Safety glasses with side shields or goggles and Arc-Flash Face Shield *or* Arc-Flash Suit Hood (4 cal/cm^2) • Body: Flame-Retardant long-sleeved shirt/pants or coverall (4 cal/cm^2) • Hand: EH gloves (Class 00 with leather protectors) • Foot: EH-rated footwear • Head/Ears: Class E hard hat, hearing protection (ear canal inserts) • Tools: ANSI-approved, voltage-rated
☐	Above 240 to 480 volts	• Eye/Face: Safety glasses with side shields or goggles and Arc-Flash Face Shield and Sock Hood (8 cal/cm^2) *or* Arc-Flash Suit Hood (8 cal/cm^2) • Body: Flame-Retardant long-sleeved shirt/pants or coverall (8 cal/cm^2) • Hand: EH gloves (Class 00 with leather protectors) • Foot: EH-rated footwear • Head/Ears: Class E Hard hat, hearing protection (ear canal inserts • Tools: ANSI-approved, voltage-rated
☐	480 to 600 volts	• Eye/Face: Safety glasses with side shields or goggles and Arc-Flash Suit Hood (8 cal/cm^2) • Body: Flame-Retardant long-sleeved shirt/pants or coverall (8 cal/cm^2) • Hand: EH gloves (Class 0 or higher with leather protectors) • Foot: EH-rated footwear (carbon fiber recommended) • Head/Ears: Class E Hard hat, hearing protection (ear canal inserts) • Tools: ANSI-approved, voltage-rated

☐ 600 volts and above	• Eye/Face: Safety glasses with side shields or goggles and Arc-Flash Suit Hood (25 cal/cm^2) • Body: 2-Layer Flame-Retardant long-sleeved shirt/pants or coverall (25 cal/cm^2) • Hand: EH gloves (Class 0 with leather protectors) • Foot: EH-rated footwear (carbon fiber recommended) • Head/Ears: Class E Hard hat, hearing protection (ear canal inserts) • Tools: ANSI-approved, voltage-rated

3 – Description of job procedure to be used in performing the work:

4 – Description of safe work practices to be employed:

5 – Method to be employed to restrict access of unqualified persons from the work area:

ELECTRICAL QUALIFIED PERSONS CERTIFICATION

I/we agree to, and certify the following:

- Work on energized circuits and components will be limited to conditions outlined on this permit.
- Required ANSI-certified tools and equipment are available and will be used.
- Required PPE is available and will be used/worn.
- A pre-task briefing has been held that included all personnel involved with this work.
- An on-site hazard assessment has been/will be conducted before work is started.
- Work described on this permit can be done safely.
- If conditions or work requirements change, or hazards not previously identified are encountered, work will stop until a new permit is issued or the new hazards have been eliminated.

Electrically Qualified Persons:

Print Name	Signature	Date

APPROVAL TO PERFORM THE WORK WHILE ELECTRICALLY ENERGIZED

Project/Site Manager:	Date:
HSE Manager/Representative:	Date:
Date & Time Permit Valid:	Date &Time Permit Expires:

URS	Health, Safety and Environment **ELECTRICAL HAZARD CHECKLIST**	Attachment 012-2 NA Issue Date: June 1999 Revision 6: September 2012

Location Inspected: _____ **Job No.:** _____

Date Inspected: _____ **Name of Inspector:** _____

Check Yes, No, or NA for Not Applicable. If a comment is required, circle the number, and see Page 3.

Electrical Equipment Markings

1.	Disconnecting switches and circuit breakers are labeled to indicate their use or equipment served.	☐ Yes	☐ No	☐ NA
2.	The necessary voltage, wattage, or current ratings are labeled.	☐ Yes	☐ No	☐ NA
3.	Circuit breakers clearly indicate whether they are in the “on” or “off” position.	☐ Yes	☐ No	☐ NA
4.	Markings for arc flash hazards per NFPA 70E are on each panel or distribution box.	☐ Yes	☐ No	☐ NA

Electrical Grounding

5.	Extension cords used have a grounding conductor (third plug).	☐ Yes	☐ No	☐ NA
6.	Ground-fault circuit interrupters are installed as required.	☐ Yes	☐ No	☐ NA
7.	Portable electrical tools and equipment are of the double-insulated type.	☐ Yes	☐ No	☐ NA
8.	Ground-fault circuit interrupters open the circuit on a ground current of 5 milliamperes or greater, and are equipped with an integral push-button test circuit.	☐ Yes	☐ No	☐ NA
9.	Ground-fault circuit interrupters are installed in accordance with the manufacturer’s instructions.	☐ Yes	☐ No	☐ NA
10.	Ground-fault circuit interrupters are tested prior to initial use, and periodically thereafter.	☐ Yes	☐ No	☐ NA
11.	Grounding rods are at least 5/8-inch- (0.625-centimeter)-diameter steel or iron rods, ½-inch- (1.27-centimeter)-diameter copper-clad steel, or ¾-inch-(1.9-centimeter)-diameter galvanized pipe.	☐ Yes	☐ No	☐ NA
12.	Grounding rods are in 8-foot (2.5-meter) lengths and driven to full depth.	☐ Yes	☐ No	☐ NA
13.	The paths from circuits, equipment, structures, and conduits or enclosures to ground are:			
	• Permanent and continuous.	☐ Yes	☐ No	☐ NA
	• Have ample carrying capacity for the current likely to be imposed on them.	☐ Yes	☐ No	☐ NA
	• Have resistance sufficiently low to permit current flow to operate circuit breakers and similar overcurrent devices on the circuit.	☐ Yes	☐ No	☐ NA
14.	Driven ground-rod electrodes have a resistance to ground not exceeding 25 ohms.	☐ Yes	☐ No	☐ NA
15.	Upon installation of the driven ground-rod electrode, the resistance was tested and recorded.	☐ Yes	☐ No	☐ NA
16.	Conductors, used for bonding and grounding circuits, are of sufficient size to carry the anticipated current.	☐ Yes	☐ No	☐ NA
17.	Grounds are not removed until all work is complete.	☐ Yes	☐ No	☐ NA

Electrical Guarding

18.	Switches, receptacles, etc., are provided with tight-fitting covers or plates.	☐ Yes	☐ No	☐ NA
19.	All energized parts of electrical circuits and equipment are guarded against accidental contact by approved cabinets or enclosure.	☐ Yes	☐ No	☐ NA
20.	All unused openings (including conduit knockouts) in electrical enclosures and fittings are enclosed with appropriate covers, plugs, or plates.	☐ Yes	☐ No	☐ NA
21.	Ground-fault circuit interrupters are installed on each temporary 15- or 20-ampere, 120-volt AC circuit at locations where construction, demolition, modifications, alterations, or excavations are being performed.	☐ Yes	☐ No	☐ NA
22.	Electrical switches and breakers (rated 440 volts or greater) are provided with a means for locking them out in the OFF position.	☐ Yes	☐ No	☐ NA

Electrical Systems

23.	Circuit breakers accessible to personnel are protected from physical damage, and located away from ignitable material.	☐ Yes	☐ No	☐ NA
24.	Weatherproof cabinets or enclosures are used when switches, circuit breakers, fuse panels, and motor controllers are in a wet or outside location.	☐ Yes	☐ No	☐ NA
25.	A readily accessible, manually operated switch is provided for each incoming service or supply circuit rated less than 5 kilovolts.	☐ Yes	☐ No	☐ NA
26.	Electrical raceways and enclosures are securely fastened in place.	☐ Yes	☐ No	☐ NA
27.	Overcurrent protection is provided for fuses or circuit breakers for each feeder and branch circuit.	☐ Yes	☐ No	☐ NA
28.	Insulting fuse tongs or extractors are used when removing fuses from circuits rated 50 to 600 volts.	☐ Yes	☐ No	☐ NA
29.	Fuse cabinets have close-fitting doors that can be locked.	☐ Yes	☐ No	☐ NA

Extension Cords

30.	Clamps or other securing means are provided on flexible cords or cables at plug receptacles, tools, equipment, etc., and the cord jackets are securely held in place.	☐ Yes	☐ No	☐ NA
31.	Flexible cords and cables are free of splices and taps.	☐ Yes	☐ No	☐ NA
32.	Only 3-wire grounded-type extension cords, designated for hard or extra-hard service, are used.	☐ Yes	☐ No	☐ NA
33.	Extension cords are listed by Underwriters Laboratories, Inc.	☐ Yes	☐ No	☐ NA
34.	Extension cords are checked for damage before use.	☐ Yes	☐ No	☐ NA
35.	The rated load on extension cords is not exceeded.	☐ Yes	☐ No	☐ NA
36.	Extension cords are not fastened with staples, hung by nails, or suspended by wire.	☐ Yes	☐ No	☐ NA

Temporary Wiring

37.	Temporary wiring is guarded, buried, or isolated by elevation to prevent accidental contact by workers and equipment.	☐ Yes	☐ No	☐ NA
38.	A vertical clearance above walkways for temporary wiring is not less than 10 feet (3 meters) from circuits carrying 600 volts or less.	☐ Yes	☐ No	☐ NA
39.	All exposed temporary wiring is supported on insulators.	☐ Yes	☐ No	☐ NA
40.	Temporary wiring is protected from accidental damage.	☐ Yes	☐ No	☐ NA

41.	Nonconductive lamp sockets and connections are permanently molded to the conductor insulation on lighting strings.	☐ Yes	☐ No	☐ NA
42.	Lighting strings have lamp guards.	☐ Yes	☐ No	☐ NA
43.	Broken or defective bulbs are replaced promptly.	☐ Yes	☐ No	☐ NA
44.	Lights are protected from accidental contact or breakage.	☐ Yes	☐ No	☐ NA
45.	Wiring installed in conduit is equipped with bushings at outlets and terminals.	☐ Yes	☐ No	☐ NA
46.	Receptacles are of the grounding type, and electrically connected to the equipment-grounding conductor.	☐ Yes	☐ No	☐ NA

Worker Practices

47.	Personnel performing electrical repairs are properly trained and qualified.	☐ Yes	☐ No	☐ NA
48.	Workers de-energize, ground, or guard electrical circuits before working in close proximity to them.	☐ Yes	☐ No	☐ NA
49.	Workers consider all electrical systems as live until verified de-energized and grounded.	☐ Yes	☐ No	☐ NA
50.	Proper lockout/tag-out procedures are used for de-energizing electric circuits.	☐ Yes	☐ No	☐ NA
51.	Arc flash protection protocols are in place for work on circuits of 50 volts or higher.	☐ Yes	☐ No	☐ NA

Equipment

52.	Only fiberglass or wood ladders are used when working near electrical hazards.	☐ Yes	☐ No	☐ NA
53.	Insulation mats are placed on floors and on frames of equipment when working on energized equipment.	☐ Yes	☐ No	☐ NA
54.	Only voltage-rated tools are used on or near live circuits. Voltage rating is appropriate for the work being performed.	☐ Yes	☐ No	☐ NA

Personal Protective Equipment

55.	Rubber matting, blankets, insulated sleeves, and rubber gloves are inspected before use.	☐ Yes	☐ No	☐ NA
56.	Workers use safety glasses and face shields during work activities where there is a reasonable probability of eye injury (and on systems with 50 or more volts).	☐ Yes	☐ No	☐ NA
57.	Workers wear arc flash protective clothing, hoods, face shields, and gloves when working on live circuits greater than 50 volts (per NFPA 70E).	☐ Yes	☐ No	☐ NA

COMMENTS:

"Class I Locations"

Class I locations are those in which flammable gases or vapors are or may be present in the air in quantities sufficient to produce explosive or ignitable mixtures. Class I locations include the following:

A. Class I, Division 1 location is a location:

1. In which ignitable concentrations of flammable gases or vapors may exist under normal operating conditions; or

2. In which ignitable concentrations of such gases or vapors may exist frequently because of repair or maintenance operations or because of leakage; or

3. In which breakdown or faulty operation of equipment or processes might release ignitable concentrations of flammable gases or vapors, and might also cause simultaneous failure of electric equipment.

B. Class I, Division 2 location is a location:

1. In which volatile flammable liquids or flammable gases are handled, processed, or used, but in which the hazardous liquids, vapors, or gases will normally be confined within closed containers or closed systems from which they can escape only in case of accidental rupture or breakdown of such containers or systems, or in case of abnormal operation of equipment; or

2. In which ignitable concentrations of gases or vapors are normally prevented by positive mechanical ventilation, and which might become hazardous through failure or abnormal operations of the ventilating equipment; or

3. That is adjacent to a Class I, Division 1 location, and to which ignitable concentrations of gases or vapors might occasionally be communicated unless such communication is prevented by adequate positive-pressure ventilation from a source of clean air, and effective safeguards against ventilation failure are provided.

"Class II Locations"

Class II locations are those that are hazardous because of the presence of combustible dust. Class II locations include the following:

A. Class II, Division 1 location is a location:

1. In which combustible dust is or may be in suspension in the air under normal operating conditions, in quantities sufficient to produce explosive or ignitable mixtures; or

2. Where mechanical failure or abnormal operation of machinery or equipment might cause such explosive or ignitable mixtures to be produced, and might also provide a source of ignition through simultaneous failure of electric equipment, operation of protection devices, or from other causes, or

3. In which combustible dusts of an electrically conductive nature may be present.

B. Class II, Division 2 location is a location in which:

1. Combustible dust will not normally be in suspension in the air in quantities sufficient to produce explosive or ignitable mixtures, and dust accumulations are normally insufficient to interfere with the normal operation of electrical equipment or other apparatus; or

2. Dust may be in suspension in the air as a result of infrequent malfunction of handling or processing equipment, and dust accumulations resulting therefrom may be ignitable by abnormal operation or failure of electrical equipment or other apparatus.

“Class III Locations”

Class III locations are those that are hazardous because of the presence of easily ignitable fibers or flyings but in which such fibers or flyings are not likely to be in suspension in the air in quantities sufficient to produce ignitable mixtures. Class III locations include the following:

A. Class III, Division 1 location is a location in which easily ignitable fibers or materials producing combustible flyings are handled, manufactured, or used.

B. Class III, Division 2 location is a location in which easily ignitable fibers are stored or handled, except in process of manufacture.

If there is a danger of:	**Then use the following:**
• Head injury from electric shock, or • Burns due to contact with exposed energized parts	• Nonconductive head protection – Type II, E nonconductive hard hat
Injury to the eyes or face from: • Electric arcs or flashes; or • Flying objectives resulting from electrical explosion	• Protective equipment for the eyes and face – face shield and safety glasses
• Shock to hands while handling energized wires	• Lineman's rubber insulated gloves rated for the voltage exposed to. Leather overgloves may be needed if exposure to abrasive surfaces is possible.
• Shock while working in areas where high voltage electrical systems are present, or • Shock when performing electrical repairs	• Non-conductive protective foot wear
Exposure to electric arcing or flashing from: • Circuits of more than 50 volts; • Opening or closing 2400 volt oil cutout switching devices; • Removing or installing links in high voltage able tap boxes; or • Removing or installing fuses in high voltage circuits.	• Protective arc flash clothing (levels 0-40 to address energy potential as specified in NFPA 70E).
IF	**THEN**
• Energized parts are exposed.	• Use nonconductive ropes and handlines near the exposed energized part.
• Working near exposed energized conductors or circuit parts.	• Use insulated tools or handling equipment if the tools or handling equipment might make contact with such conducts or parts.
• The insulating capability of insulated tools or handling equipment is subject to damage.	• Protect the insulating material.
• Removing or installing fuses when the fuse terminals are energized.	• Use fuse-handling equipment insulated for the circuit voltage.
• Working near exposed energized parts that might be accidentally contacted or where dangerous electric heating or arcing might occur.	• Use protective shields, protective barriers, or insulating materials to protect from shock, burns, or other electrically related injuries.
• Normally enclosed live parts are exposed for maintenance or repair.	• Guard the parts to protect unqualified persons from contact with the live parts.

OSHA (29 CFR 1926.404) requires that employers use either ground-fault circuit interrupters (GFCIs) or an Assured Equipment Grounding Conductor Program to protect employees on construction sites. This Plan consists of the two elements described below.

1. Ground-Fault Circuit Interrupters

All 120-volt, single-phase 15- and 20-ampere receptacle outlets on construction sites that are not part of the permanent wiring of the building or structure, and that are in use by employees will have approved GFCIs for personnel protection. *Temporary electrical service GFCIs will be tested weekly by depressing the "Test" button and ensuring receptacle functionality*.

Receptacles on a two-wire, single-phase portable or vehicle-mounted generator rated not more than 5 kilovolts, where the circuit conductors of the generator are insulated from the generator frame and all other grounded surfaces, need not be protected with GFCIs.

2. Assured Equipment Grounding Conductor Program

URS has established and implemented this Assured Equipment Grounding Conductor Program on construction sites covering all cord sets, receptacles that are not a part of the building or structure, and equipment connected by cord and plug that are available for use, or used by employees and volunteer construction workers.

Each cord set, attachment cap, plug, and receptacle of cord sets, and any equipment connected by cord and plug, except cord sets and receptacles that are fixed and not exposed to damage, ***must be visually inspected before each day's use*** for external defects, such as deformed or missing pins or insulation damage, and for indications of possible internal damage. Equipment found damaged or defective will not be used until repaired.

URS will designate one or more competent person at each construction site to implement this program. *"Competent person" means one who is capable of identifying existing and predictable hazards in the surroundings or working conditions which are unsanitary, hazardous, or dangerous to employees, and who has authorization to take prompt corrective measures to eliminate them.*

Tests

The following two tests will be performed on all cord sets, receptacles that are not a part of the permanent wiring of the building or structure, and cord- and plug-connected equipment required to be grounded.

Continuity Test

The continuity test ensures that the equipment-grounding conductor is electrically continuous. Perform this test on all cord sets, receptacles that are not part of a building or structure's permanent wiring, and cord- and plug-connected equipment required to be grounded. Use a simple continuity tester, such as a lamp and battery, bell and battery, an ohmmeter, or a receptacle tester.

Terminal Connection Test

The terminal connection test ensures that the equipment-grounding conductor is connected to its proper terminal. Perform this test with the same equipment used in the first test.

Each receptacle and attachment cap or plug will be tested for correct attachment of the equipment-grounding conductor. The equipment-grounding conductor will be connected to its proper terminal.

All required tests will be performed:

1. Before first use and visually inspected daily thereafter.
2. Before equipment is returned to service following any repairs.
3. Before equipment is used after any incident that can be reasonably suspected to have caused damage; such as when a cord set is run over, “pinched” in a doorway, or “crushed” in a window.
4. Perform monthly continuity tests.

The employer will neither make available nor permit any employees to use equipment that has not met the four requirements listed above.

Records will be kept of the tests performed, as required. These test records will identify each receptacle, cord set, and cord- and plug-connected equipment piece that passed the test, and will indicate the last date it was tested or the interval for which it was tested. This record will be kept by means of logs, color coding, or other effective means, and will be maintained until replaced by a more current record. The record will be made available on the job site for inspection by OSHA and any affected employee.

Part of the URS recordkeeping task, and the method preferable to OSHA, color coding is used for marking cord sets and cord- and plug-connected equipment. The table below lists a color code that is widely used. Colored plastic or vinyl electrical tape is placed on one or both ends of cords and cord- and plug-connected equipment to denote the month that the tests were performed.

Assured Equipment Grounding Conductor Program Color Code			
Month #	**Month Tested**	**Color of tape(s) to apply to cord**	
1	**January**	**White**	
2	**February**	**White +**	**Yellow**
3	**March**	**White +**	**Blue**
4	**April**	**Green**	
5	**May**	**Green +**	**Yellow**
6	**June**	**Green +**	**Blue**

Assured Equipment Grounding Conductor Program Color Code			
Month #	Month Tested	Color of tape(s) to apply to cord	
7	July	Red	
8	August	Red +	Yellow
9	September	Red +	Blue
10	October	Orange	
11	November	Orange +	Yellow
12	December	Orange +	Blue

To remember the color of tape to place on the newly tested cord, keep in mind the color for the start of each calendar quarter by season:

White → January →Winter
Green →April →Spring
Red →July →Summer, or the 4th of July
Orange →October →Fall, or pumpkin

Then add:

Yellow for the second month in each quarter
Blue for the third month of each quarter

URS SAFETY MANAGEMENT STANDARD

Excavation

1. Applicability

This standard applies to URS Corporation, and its subsidiary companies, office and project locations.

2. Purpose and Scope

This purpose of this standard is to protect personnel from the hazards associated with excavation and trenching activities.

3. Procedures

The associated implementing regional procedures for this standard are included as attachments:

SMS 013 NA – North America; Australia / New Zealand

SMS 013 INT – International Operations (including Europe, Asia, South America and Africa)

URS SAFETY MANAGEMENT STANDARD

Excavation

1. Applicability

This standard applies to operations where URS Corporation and subsidiary companies perform trenching and excavation activities, and/or where URS employees are exposed to hazards associated with trenching and excavation activities.

2. Purpose and Scope

The purpose of this standard is to protect personnel from the hazards associated with excavation and trenching activities.

3. Implementation

Implementation of this standard is the responsibility of the URS manager directing activities of the facility, site, or project location.

4. Requirements

A. Competent Person

Where potential employee exposure to hazards associated with the excavation (e.g., entrapment, falls greater than 4 feet (1.2 meters), cave-ins, etc.) can reasonably be anticipated, an excavation-competent person must be on site. The excavation-competent person:

1. Has formal documentation of training as an excavation-competent person.
2. Must be physically located at the excavation site at all times while work is in progress.
3. Is responsible for conducting daily inspections of excavations, adjacent areas, and protective systems prior to each shift.
4. Is responsible for inspection after every rainstorm or other potentially hazard-producing event.
5. Must have knowledge of soils and soil classification.
6. Understands design and use of protective systems.
7. Understands the requirements of the applicable regulations.

8. Has authority to stop work and take corrective actions when conditions change.

9. Has the ability to recognize and test hazardous atmospheres.

10. If URS hires a subcontractor to perform excavation or trenching activities, the subcontractor will be required to assign an excavation-competent person to the project. Documentation of this person's qualifications will be maintained in the project safety file.

B. Preliminary Planning

1. Underground and aboveground utilities, adjacent structures or retaining walls, spoil layout, truck routes, and emergency procedures must be identified before work begins. Structures that may be impacted shall be properly supported before work begins.

2. When the excavation or trench approaches the estimated location of underground utilities, the exact location will be determined by methods identified in SMS 034 – Utility Clearance and Isolation.

C. Access/Egress

1. Entry into an excavation or trench should not be made unless absolutely necessary.

2. If personnel enter an excavation or trench that is 4 feet (1.2 meters) deep or more, ladders, steps, ramps, or other safe means of access and egress must be provided, and located at intervals of 25 feet (7.6 meters) or less of lateral travel. If a ladder is used, the ladder must extend 3 feet (0.9 meter) above the original surface of the ground.

3. In excavations and trenches that employees may be required to enter, excavated or other material must be effectively stored and retained at least 4 feet (1.2 meters) or more from the edge of the excavation. As an alternative to this clearance requirement, barriers or other effective retaining devices may be used in lieu thereof in order to prevent excavated or other materials from falling into the excavation.

4. Surface crossing of trenches by personnel or vehicles should not be made unless absolutely necessary. When necessary, the following conditions must be met:

a. Vehicle crossings must be designed by and installed under the supervision of a registered professional engineer.

b. Walkways or bridges must have a minimum clear width of 20 inches (50.8 centimeters [cm]), be equipped with standard guardrails, and extend a minimum of 24 inches (61 cm) past the surface edge of the trench.

5. When performing excavation oversight or observation on an excavation/trench greater than 4 feet (1.2 meters) in depth, personnel must remain at least more than 2 feet (0.6 meter) from the leading edge of the excavation.

D. Soil Classification

When sloping, benching, or installed protective systems are used, soil classification of each rock and soil deposit must be classified by a competent person. Soil and rock will be classified as one of the following: stable rock, Type A soil, Type B soil, or Type C soil. The classification will be based on the results of at least one visual analysis and one manual analysis, such as soil plasticity dry strength, thumb penetration, pocket penetrometer, or hand-operated shear vane. In the event that soil classification requires additional technical expertise, the competent person will consult with a registered professional engineer. (See Supplemental Information A – Soil Classification.)

E. Protective Systems

1. Employees in excavations deeper than 4 feet (1.2 meters) must be protected by means of properly designed protective systems.

2. Protective systems for excavations or trenches deeper than 20 feet (6.1 meters) must be designed and stamped by a registered professional engineer.

3. Protective systems must have the capacity to resist all loads that are intended or could reasonably be expected to be applied or transmitted to the system.

a. Sloping and Benching

- When personnel are required to work in trenches or excavated areas, all slopes must be excavated to at least the angle of repose, or otherwise safely supported to prevent cave-ins.

- The determination of the angle of repose and design of the supporting system must be based on careful evaluation of pertinent factors such as: depth of cut; possible variation in water content of the material while the excavation is open; anticipated changes in materials from exposure to air, sun, water, or freezing; loading imposed by structures, equipment, overlying material, or stored material; and vibration from equipment, blasting, traffic, or other sources. (See Supplemental Information B – Angles of Repose – Simple Slopes.)

- The slopes and configurations of sloping and benching systems for excavations 4 feet (1.2 meters) to 20 feet (6.1 meters) deep will be selected and constructed by the employer or his designee, and must be in accordance with the following requirements.

- Soil must be analyzed by a competent person to determine the soil or rock type. The maximum allowable slope for each soil or rock type is identified in the table below.

Soil or Rock Type	Maximum Allowable Slope (Horizontal: Vertical)
Stable Rock	Vertical 90°
Type A	¾:1 or 53°
Type B	1:1 or 45°
Type C	1½: 1 or 34°

- Soil classification is not required if 1½:1 (Horizontal:Vertical) or 34° slope is used. If this slope is greater than 1½:1 (Horizontal:Vertical) or 34°, a soil classification must be made. The excavation must comply with one of the following three options.

  – Option I – Maximum allowable slope, and allowable configurations for sloping and benching systems will be determined in accordance with the conditions and requirements in Supplemental Information A – Soil Classification; and Appendix B – Sloping and Benching.

  – Option II – Designs of sloping or benching systems will be selected by using tabulated data based on soil

conditions. These tables must be calculated and prepared by a registered professional engineer. The plan must be stamped by a registered professional engineer, and this information must be documented and filed on site.

– Option III – A registered professional engineer must design the sloping and benching system and stamp the plan. This information must be documented and filed on site.

Excavations with sloping and benching in excess of 20 feet deep must be designed and stamped by a registered professional engineer.

b. Timber and Aluminum Hydraulic Shoring for Trenches

Designs of support systems, shield system, and other protective systems will be selected and constructed by the employer or their designee, and must be in accordance with one of four options.

- Option I – Designs using Appendices A, C, and D (see 29 Code of Federal Regulations [CFR] 1926 Subpart P). Shoring in trenching will be determined using conditions and requirements of Supplemental Information A – Soil Classification; Appendix C – Timber Shoring; and Appendix D – Aluminum Hydraulic Shoring.

- Option II – Designs of support systems, shield systems, or other protective systems that are drawn from manufacturer's tabulated data will be in accordance with all specifications, recommendations, and limitations issued or made by the manufacturer (i.e., trench jacks, hydraulic). This information must be filed on site.

- Option III – Designs using other tabulated data. Designs of support systems, shield systems, or other protective systems will be selected from and be in accordance with tabulated data. This information must be filed on site.

- Option IV – Design by registered professional engineer. Support systems, shield systems, and other protective

systems not using Option I, II, or III must be approved and stamped by a registered professional engineer.

c. Alternatives to Timber Shoring

- Portable trench boxes or sliding trench shields may be used for the protection of personnel in lieu of a shoring system or sloping. Where such trench boxes or shields are used, they must be designed, constructed, and maintained in a manner that will provide protection equal to or greater than the sheeting or shoring required for the trench.

- Trench boxes require placement using portable lifting equipment such as backhoes or other tractor-like devices. The job hazard analysis will consider the hazards of lifting and placement of the trench boxes, including the proper use of chains, stability of the mobile equipment, swing radius protection for load, and load rating for the lifting device.

- Trench shields and boxes must either be pre-manufactured with listed load ratings, or designed, stamped, and constructed under the direction of a registered professional engineer.

d. Protective systems designed to protect employees in excavations deeper than 20 feet (6.1 meters) must be designed and stamped by a registered professional engineer.

e. Excavations must be clearly identified and barricaded to keep unauthorized individuals out.

f. Walkways, runways, and sidewalks must be kept clear of excavated material or other obstructions, and no sidewalks should be undermined unless shored to carry a minimum live load of one 125 pounds (56.6 kilograms) per square foot.

g. If it is necessary to place heavy objects or operate heavy equipment on a level above and near any excavation, the side of the excavation must be sheet piled, shored, and braced as necessary to resist the extra pressure due to such superimposed loads.

F. Hazardous Atmospheres and Confined Spaces

1. In excavations or trenches greater than 4 feet (1.2 meters) deep where an oxygen deficient (<19.5 percent) or flammable (>10 percent Lower Explosive Limit [LEL]) or other potentially toxic environment could be expected to exist, the atmosphere of the excavation must be monitored before workers enter the excavation. Air monitoring must be conducted before personnel enter an excavation or trench, and then periodically to ensure that the atmosphere remains safe. Monitoring will be conducted at a minimum of three vertical depths of the excavation to detect potentially stratified gas layers (e.g., propane has a density 1.55 times that of normal air and will accumulate in the lower depths of an open trench).

2. The frequency of air monitoring will be increased if equipment used in or near the excavation or trench may alter the atmosphere where personnel are working. All air monitoring must be documented and maintained in the project safety files.

3. Attended emergency rescue equipment, such as a breathing apparatus, a safety harness and line, basket stretcher, etc., must be readily available where adverse atmospheric conditions may exist or develop in an excavation or trench.

4. Excavations or trenches may qualify as confined spaces. When this occurs, compliance with SMS 010 – Confined Space Entry, is required.

G. Water Accumulation

1. Employees will not work in excavations where water is accumulating unless adequate precautions have been taken to protect employees. Personnel must exit excavations and trenches during rainstorms.

2. De-watering equipment must be installed and monitored by a competent person.

3. Diversion ditches, dikes, or other suitable means will be used to prevent water from entering an excavation and to provide adequate drainage of the area adjacent to the excavation.

4. Excavations and trenches must be inspected by a competent person after each rain event and before personnel are permitted to re-enter the excavation or trench.

H. Excavation and Trenching Permit

1. An Excavation/Trenching Permit (Attachment 013-1 NA) must be completed prior to all excavation or trenching activities.

2. The Excavation and Trenching Permit must be completed and signed by all applicable parties as indicated on the permit.

3. Excavation and Trenching Permits may be valid for up to 1 week.

I. Daily Inspections

1. Daily inspections must be made (Attachment 013-2 NA) of excavations and trenches. Where potential employee exposure to hazards associated with the excavation (e.g., entrapment, falls greater than 4 feet (1.2 meters), cave-ins, etc.) can reasonably be anticipated, these inspections must be made by a competent person.

2. Inspections must be conducted daily before the start of work, after every rainstorm, after other events that would increase hazards such as snowstorm, thaw, earthquake, or dramatic change in weather, and when fissures, tension crack, sloughing, undercutting, water seepage, bulging at the bottom or other similar conditions occur.

3. If evidence of possible cave-ins or slides is apparent, all work in the excavation or trench must cease until the necessary precautions have been taken to safeguard the personnel.

J. Excavating at Potential MEC/UXO Sites

1. If the project site is suspected of munitions and explosives of concern (MEC) or unexploded ordinance (UXO) contamination, the UXO team will conduct a reconnaissance and MEC/UXO avoidance to provide clear access routes to each site before excavation crews enter the area.

2. MEC/UXO sites with planned excavation activities will not be conducted until a complete plan for the site is prepared and/or approved by the URS UXO Safety Officer. MEC/UXO avoidance

must be conducted during excavation operations on known or suspect MEC/UXO sites (SMS 039).

K. Training/Briefings

1. Conduct and document daily safety briefings for all employees associated with excavation activities. Discuss excavation hazards, protective measures, and work practices that will be applicable to the day's activities.

5. Documentation Summary

The following information will be maintained in the project file:

A. Competent person qualifications.

B. Excavation and Trenching Permit(s).

C. Daily inspections by an excavation-competent person.

D. Air monitoring records.

6. Resources

A. U.S. Occupational Safety and Health Administration (OSHA) Standard Excavations 29 CFR 1926, Subpart P

1. Appendix B, Sloping and Benching

2. Appendix C, Timber Shoring

3. Appendix D, Aluminum Hydraulic Shoring

4. Appendix E, Alternatives to Timber Shoring

B. U.S. OSHA Technical Links – Trenching and Excavation

C. SMS 010 – Confined Space Entry

D. SMS 034 – Utility Clearance and Isolation

E. SMS 039 – Munitions Response / Munitions and Explosives of Concern

F. Attachment 013-1 NA – Excavation/Trenching Permit

G. Attachment 013-2 NA – Daily Excavation/Trench Inspection Form

7. Supplemental Information

A. Soil Classification

B. Angle of Repose – Simple Slopes

URS	Health, Safety and Environment **EXCAVATION / TRENCHING PERMIT**	Attachment 013-1 NA Issue Date: July 2000 Revision 7: September 2012

Authorization No.: _____ Date and Time Permit Valid: _____

Competent Person: _____ Date and Time Permit Expires: _____

Project Name: _____ Excavation/Trench Location: _____

Description or Job Special Procedures:

_____

_____

_____

ESTIMATED DIMENSIONS: **DEPTH =** _____ **TOP =** W _____ L _____ **BOTTOM =** W _____ L _____	**SOIL TYPE:** ☐ Stable Rock ☐ Type A ☐ Type B ☐ Type C ☐ Avg. Compression Strength _____ tsf ☐ Compressed Strength Data _____
SOIL ANALYSIS METHOD(S) USED: ☐ Visual ☐ Manual ☐ Tabulated Data	
SOIL CHARACTERISTICS: ☐ Cemented ☐ Cohesive ☐ Layered ☐ Fissured ☐ Granular ☐ Plastic ☐ Dry ☐ Moist ☐ Saturated ☐ Submerged	**MANUAL TEST USED:** ☐ Plasticity ☐ Dry Strength ☐ Ribbon ☐ Thumb Penetration ☐ Pocket Penetrometer ☐ Dry Testing ☐ Other
PROTECTIVE SYSTEMS: **Protective systems for excavations/trenches deeper than 20 feet (6.1 meters) must be designed and approved by a registered professional engineer.**	**UTILITIES:** ☐ One Call Service Notified ☐ Utilities Marked by Public Utilities ☐ Property Owner Contacted ☐ Utility Drawings Reviewed ☐ Private Utility Locater Utilized
SLOPING/BENCHING: ☐ **Vertical (90°)** ☐ **3/4 :1 (53°)** ☐ **1:1 (45°)** ☐ **1 ½:1 (34°)** ☐ **2:1 (26°)** ☐ **Other**	
SHORING: ☐ Timber ☐ Aluminum Hydraulic ☐ Trench Shield/Trench Box	**LIST OF KNOWN OBSTRUCTIONS:** ☐ Electrical ☐ Telephone ☐ Water ☐ Sewer ☐ Steam ☐ Alarm ☐ Drain ☐ Process ☐ Footings ☐ Pilings ☐ Concrete Encasement ☐ Other
OTHER: ☐ Means of Egress Required ☐ ☐ Confined Space Permit Required ☐	
SPECIAL INSTRUCTIONS and WORK INSTRUCTIONS	

All unsafe conditions must be corrected prior to excavation entry. If any hazardous conditions are observed, the excavation must be evacuated immediately, and no one is allowed to re-enter until corrective action has been taken.

Signature and Dates

	Print Name	Signature	Date
Excavation Competent Person			
Client Representative (if applicable)			
Site Supervisor			
HSE Representative			
Registered Professional Engineer (if applicable)			
Project Manager			
Subcontractor Rep			
Equipment Superintendent			
Field Engineer			
Other			

URS	Health, Safety and Environment **DAILY EXCAVATION / TRENCH INSPECTION FORM**	Attachment 013-2 NA Issue Date: July 2000 Revision 7: September 2012

Competent Person: _____ Date: _____

Project Name: _____ Weather Conditions: _____

Excavation Location: _____ Rainfall Amounts 24 Hours Previous: _____

Access/Egress

Is access and egress located within 25 feet (7.6 meters) of entrants?	☐ Yes	☐ No	☐ Not Applicable
If ladders are used, do they extend 3 feet (0.9 meter) beyond the top of the excavation?	☐ Yes	☐ No	☐ Not Applicable

Soil Characteristics

Is any water seepage noted in trench walls or bottom?	☐ Yes	☐ No	☐ Not Applicable
Are pumps in place, or available if needed?	☐ Yes	☐ No	☐ Not Applicable
Is there evidence of significant fracture planes in soil or rock?	☐ Yes	☐ No	☐ Not Applicable
Are there any zones of unusually weak soils or materials not anticipated?	☐ Yes	☐ No	☐ Not Applicable
Have tension cracks been observed along the top on any slopes?	☐ Yes	☐ No	☐ Not Applicable
Are there any noted dramatic dips or bedrock?	☐ Yes	☐ No	☐ Not Applicable
Is there any evidence of caving or sloughing of soil since the last inspection?	☐ Yes	☐ No	☐ Not Applicable

Protective Systems

Are slopes cut at design angle of repose?	☐ Yes	☐ No	☐ Not Applicable
Is the shoring system installed in accordance with the design?	☐ Yes	☐ No	☐ Not Applicable
Is the shoring being used secure?	☐ Yes	☐ No	☐ Not Applicable
Does the design include an adequate safety factor for equipment being used?	☐ Yes	☐ No	☐ Not Applicable
Is traffic being adequately kept away from the excavation/trenching operation?	☐ Yes	☐ No	☐ Not Applicable
Are hydraulic shores pumped to design pressure?	☐ Yes	☐ No	☐ Not Applicable
Is vibration from equipment or traffic too close to the trenching operation?	☐ Yes	☐ No	☐ Not Applicable
Are trench box(s) certified?	☐ Yes	☐ No	☐ Not Applicable

Hazardous Atmosphere & Confined Spaces

Is the hazardous atmosphere testing being conducted on a regular basis?	☐ Yes	☐ No	☐ Not Applicable
Have rescue procedures been established, and is equipment immediately available?	☐ Yes	☐ No	☐ Not Applicable

Miscellaneous

Are utility markings in place?	☐ Yes	☐ No	☐ Not Applicable
Are trees, boulders, or other hazards located in the area?	☐ Yes	☐ No	☐ Not Applicable
Are barricades or covers in place and in good condition?	☐ Yes	☐ No	☐ Not Applicable
Is excavated material and equipment at least 2 feet (0.6 meter) from the edge of the excavation?	☐ Yes	☐ No	☐ Not Applicable
Are all short-term trench(es) covered within 24 hours?	☐ Yes	☐ No	☐ Not Applicable
Are GFCIs used on all temporary electrical cords?	☐ Yes	☐ No	☐ Not Applicable
Is the excavation within the original scope of the excavation permit?	☐ Yes	☐ No	☐ Not Applicable
Is a valid excavation permit executed for the excavation/trenching activity?	☐ Yes	☐ No	☐ Not Applicable

Notes:

_____

_____

_____

_____

_____

RESPONSIBILITY

"I hereby attest that the following conditions existed and that the following items were checked or reviewed during this inspection."

All unsafe conditions must be corrected prior to excavation entry. If any hazardous conditions are observed, the excavation must be immediately evacuated, and no one is allowed to re-enter until corrective action has been taken.

Daily Excavation/Trenching Inspection Completed By:

_____ _____

COMPETENT PERSON **Date**

"Type A" soils

Cohesive soils with an unconfined, compressive strength of 1.5 ton per square foot (tsf) (144kPa) or greater. Examples of cohesive soils are clay, silty clay, sandy clay, clay loam and, in some cases, silty clay loam and sandy clay loam. Cemented soils such as caliche and hardpan are also considered Type A.

However, no soil is Type A if:

1. The soil is fissured;
2. The soil is subject to vibration from heavy traffic, pile driving, or similar effects;
3. The soil has been previously disturbed;
4. The soil is part of a sloped, layered system where the layers dip into the excavation on a slope of four horizontal to one vertical (4H:1V)or greater; or
5. The material is subject to other factors that would require it to be classified as a less stable material.

"Type B" soils

1. Cohesive soil with an unconfined compressive strength greater than 0.5 tsf (48 kPa) but less than 1.5 tsf (144 kPa); or
2. Granular cohesionless soils including angular gravel (similar to crushed rock), silt, silt loam, sandy loam and, in some cases, silty clay loam and sandy clay loam.
3. Previously disturbed soils except those which would otherwise be classed as Type C soil.
    a. Soil that Dry rock that is not stable; or
    b. Material that is part of a sloped, layered system where the layers dip into the excavation on a slope less steep than four horizontal to one vertical (4H:1V), but only if the material would otherwise be classified as Type B.

"Type C" soils

1. Cohesive soil with an unconfined compressive strength of 0.5 tsf (48 kPa) or less;
2. Granular soils including gravel, sand, and loamy sand;
3. Submerged soil or soil from which water is freely seeping;
4. Submerged rock that is not stable, or
5. Material in a sloped, layered system where the layers dip into the excavation or a slope of four horizontal to one vertical (4H:1V) or steeper.

Soil Texture	Visual detection of particle size and general appearance of the soil	Squeezed in hand and pressure released		Soil ribboned between thumb and finger when moist.
		When Air Dry	When Moist	
Sand	Soil has a granular appearance in which the individual grain sizes can be detected. It is free flowing when in a dry condition.	Will not form a cast and will fall apart when pressure is released.	Forms a cast, which will crumble when lightly touched.	Cannot be ribboned.
Sandy Loam	Essentially a granular soil with sufficient silt and clay to make it somewhat coherent. Sand characteristics predominate.	Forms a cast, which readily falls apart when lightly touched.	Forms a cast, which will bear careful handling without breaking.	Cannot be ribboned.
Loam	A uniform mixture of sand, silt and clay. Grading of sand fraction quite uniform from coarse to fine. It is mellow, has somewhat gritty feel, and yet is smooth and slightly plastic.	Forms a cast, which will bear careful handling without breaking.	Forms a cast, which can be handled freely without breaking.	Cannot be ribboned.
Silt Loam	Contains a moderate amount of the finer grades of sand and only a small amount of clay over half of the particles are silt. When dry it may appear quite cloddy which readily can be broken and pulverized to a powder.	Forms a cast, which can be freely handled. Pulverized it has a soft flour-like feel.	Forms a cast, which can be freely handled. When wet, soil runs together and puddles.	It will not ribbon but it has a broken appearance, feels smooth and may be slightly plastic.
Silt	Contains over 80% of silt particles with very little fine sand and clay. When dry, it may be cloddy, readily pulverizes to powder with a soft flour-like feel.	Forms a cast, which can be handled without breaking.	Forms a cast, which can freely be handled. When wet, it readily puddles.	It has a tendency to ribbon with a broken appearance, feels smooth.
Clay Loam	Fine textured soil breaks into hard lumps when dry. Contains more clay than silt loam. Resembles clay in a dry condition; identification is made on physical behavior of moist soil.	Forms a cast which can be handled freely without breaking.	Forms a cast, which can be handled freely without breaking. It can be worked into a dense mass.	Forms a thin ribbon, which readily breaks, barely sustaining its own weight.
Clay	Fine textured soil breaks into very hard lumps when dry. Difficult to pulverize into a soft flour-like powder when dry. Identification based on cohesive properties of the moist soil.	Forms a cast which can be freely handled without breaking.	Forms a cast, which can be handled freely without breaking.	Forms long, thin flexible ribbons. Can be worked into a dense, compact mass. Considerable plasticity.
Organic Soils	Identification based on the high organic content. Muck consists of thoroughly decomposed organic material with considerable amount of mineral soil finely divided with some fibrous remains. When considerable fibrous material is present, it may be classified as peat. The plant remains or sometimes the woody structure can easily be recognized. Soil color ranges from brown to black. They occur in lowlands. In swamps or swales. They have high shrinkage upon drying. Table 1. –Field Method for identification of soil texture			

ANGLE OF REPOSE

FOR SLOPING OF SIDES OF EXCAVATIONS LESS THAN 20 FEET DEEP

Note: Clays, Silts, Loams or Non-Homogenous Soils Require Shoring or Bracing

The Presence of Ground Water Requires Special Treatment

Examples*

Type A Soils:
Clay, silt clay, sandy clay clay loam, caliches, and hardpan

Type B Soils:
Angular gravel, silt, silt loam, sandy loam, unstable dry rock

Type C Soils:
Gravel, sand and loamy sand, submerged soil and rock, and layered soils

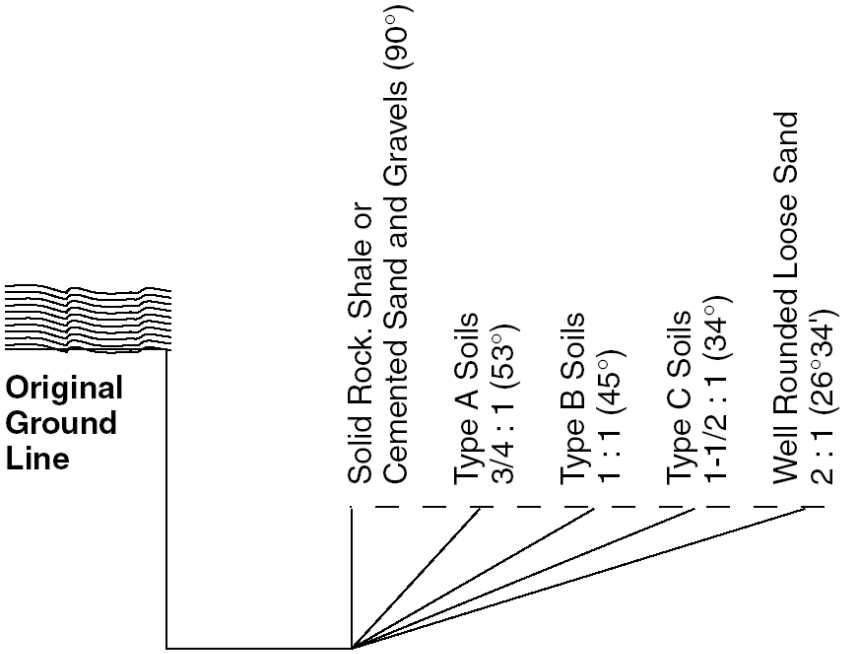

REFERENCE:
OSHA Safety and Health Standards 1926
Appendix A and B to Subpart P

URS SAFETY MANAGEMENT STANDARD

Fire Protection and Prevention

1. Applicability

This standard applies to URS Corporation, and its subsidiary companies, office and project locations.

2. Purpose and Scope

The purpose of this standard is to reduce/eliminate potential fire hazards in the workplace and to provide for a rapid, effective response should a fire occur.

3. Procedures

The associated implementing regional procedures for this standard are included as attachments:

SMS 014 NA – North America; Australia / New Zealand

SMS 014 INT – International Operations (including Europe, Asia, South America and Africa)

URS SAFETY MANAGEMENT STANDARD

Fire Protection and Prevention

1. Applicability

This standard applies to URS Corporation and its subsidiary companies.

2. Purpose and Scope

The purpose of this standard is to reduce/eliminate potential fire hazards in the workplace and to provide for a rapid, effective response should a fire occur.

3. Implementation

Implementation of this standard is the responsibility of the URS manager directing activities of the facility, site, or project location. At project sites controlled by contractors or building owners, some of these responsibilities may be covered by building/facility owners or owner agents.

4. Requirements

A. Fire Protection

1. A fire protection program will be developed and followed throughout all phases of work.

    a. Access to available firefighting equipment will be maintained at all times.

    b. Firefighting equipment will be inspected monthly and maintained in operating condition. Defective equipment will be immediately replaced.

    c. Fire extinguishers that out of service or discharged will be immediately tagged, removed from service, and replaced.

    d. Firefighting equipment will be conspicuously located and not obstructed from view in the workplace.

    e. Where and when required or necessary, the project manager will provide a trained and equipped firefighting organization (fire brigade) to assure adequate protection.

2. A temporary or permanent water supply (sufficient volume, duration, and pressure) required to properly operate the firefighting equipment will be made available as soon as combustible materials accumulate.

a. Where underground water mains are to be provided, they will be installed, completed, and made available for use as soon as practicable.

b. Fire Hose and Connections

   i. One hundred feet, or less, of 1.5-inch (3.75-cm) hose, with a nozzle capable of discharging water at 25 gallons (95 liters) or more per minute, may be substituted for a fire extinguisher rated not more than 2A 20BC in the designated area, provided the hose line can reach all points in the area.

   ii. If fire hose connections are not compatible with local firefighting equipment, the project manager will provide adapters or equivalent to permit connections.

   iii. During demolition involving combustible materials, charged hose lines supplied by hydrants, water trucks with pumps, or equivalent will be made available.

c. Fixed Firefighting Equipment

   i. Sprinkler Protection

      - Where URS is involved in the construction of a facility in which automatic sprinkler protection is required, the installation of the sprinklers will closely follow the construction, and sprinklers will be placed into service as soon as practicable.

      - Where URS is involved in the demolition or alteration of a facility, existing automatic sprinkler installations should be retained in service as long as reasonable. Only authorized persons will permit the operation of sprinkler control valves. Modification of sprinkler systems to permit alterations or additional demolition should be expedited so that the automatic protection may be returned to service as quickly as possible. Sprinkler control valves will be checked daily, at the close of work/business, to ascertain that the protection is in service.

ii. Standpipes

In all structures requiring standpipes or where standpipes exist in structures being altered, they will be maintained to always be ready for fire protection use. Conspicuously marked standpipes will be provided with connections on the outside of the structure (at the street level). Each floor will be equipped with at least one standard hose outlet.

iii. Fire Alarm Devices

- An alarm system (e.g., telephone system, siren) will be established to alert both the employees on the site and the local fire department of an emergency.
- The alarm code and reporting instructions will be conspicuously posted at phones and at all employee entrances.

iv. Fire Cutoffs

- In new construction, firewalls and exit stairways required for the completed buildings will be given construction priority. Fire doors, with automatic closing devices, will be hung on openings as soon as practicable.
- Fire cutoffs will be retained in buildings undergoing alterations or demolition until operations necessitate their removal.

d. Jobsite Requirements

i. Material storage areas will be equipped with fire extinguishers adequate for their size, construction, and the material stored therein.

ii. Welding, cutting, grinding, and burning will not be done within 25 feet (7.6 meters) of any material fuel storage area. Fire extinguishers will be provided at the site of welding operations.

iii. Flammable materials will be stored as far as possible from the working area, at least 25 feet (7.6 meters). Safety cans will be used when handling and transporting fuel, gas, and other flammables.

iv. Extinguishers are to be adequately maintained.

v. The telephone number of the nearest organized firefighting group is to be displayed at jobsite telephones.

3. Fire Extinguishing Equipment

a. Extinguisher Requirements

Use only UL-listed extinguishers. Mark extinguishers and extinguisher locations, indicating the suitability of each extinguisher for a particular classification of fire.

b. Building and Occupancy Hazard Protection

Requirements for fire extinguisher protection are divided into two categories: building protection and occupancy hazard protection. Provide for extinguishing equipment to protect both the building structure (if it is combustible) and the occupancy hazards inside it.

i. For building protection, provide fire extinguishers rated for Class A fires or greater, as required by applicable building codes.

ii. For protection against occupancy hazards, provide fire extinguishers rated for Class A, B, C, or other fire potential as appropriate. Requirements may vary from section to section within a single building. Determine the occupancy hazards, as well as the proper ratings of necessary fire extinguishers, of each room or section. Classify rooms or sections as light hazard, ordinary hazard, or extra hazard. See Supplemental Information B for additional details and assistance in determining extinguisher requirements.

c. Extinguisher Placement

i. Place extinguishers in conspicuous locations, along normal paths of travel, and near exits. If the extinguishers are not readily visible, use wall markings, signs, or lights to identify their locations.

ii. Ensure that extinguishers are readily accessible. Keep the space in front of and below extinguishers clear at all times. The floor area beneath extinguishers may be marked as a reminder to keep the area clear.

iii. Hang extinguishers on hangers, brackets, or other equipment furnished by the manufacturer, or place them on shelves. If an extinguisher weighs less than 40 pounds (18.1 kg), the top of the extinguisher will not be more than 5 feet (1.5 meters) above the floor. If an extinguisher weighs equal to or more than 40 pounds (18.1 kg), it will not be more than 3.5 feet (1.1 meters) above the floor. The clearance between the bottom of the extinguisher and the floor will never be less than 4 inches (10.2 cm).

iv. Provide the appropriate number and types of fire extinguishers for operations being performed. Refer to Supplemental Information A for guidance.

d. Inspection

Properly trained personnel will inspect extinguishers at least monthly. The monthly inspection will include the following items at a minimum:

i. Location.

ii. Rating.

iii. Access.

iv. Visibility.

v. Operating instructions.

vi. Seals.

vii. Tamper indicators.

viii. Fullness.

ix. Physical condition.

Attach inspection tags to each extinguisher indicating the dates of purchase, inspection, testing, and recharging, and the initials of the inspector. In addition to the tag, a colored tape may be used to indicate that an extinguisher has been inspected.

Fire extinguishers must be inspected annually by a qualified fire services contactor.

e. Testing and Maintenance

i. Establish periodic testing programs to ensure that extinguishers are in proper operating condition. Only properly trained personnel (preferably fire extinguisher vendors) should maintain extinguishers.

ii. At the conclusion of testing or maintenance work, attach a tag to the extinguisher showing the date and the signature of the person who performed the service.

f. Testing Intervals

i. Each year, recharge soda acid and foam extinguishers, and weigh others according to the manufacturer's instructions. Inspect the body, hose, and nozzle of the extinguisher, and examine the dry powder. Note: Testing is not necessary for stored pressure units unless a loss of pressure or other conditions indicates a need; however, units mounted in vehicles or otherwise subject to mechanical packing should have their powder examined.

ii. Every five years, test the pressure parts of all extinguishers except Halon 1301 extinguishers; dry chemical extinguishers with braised-brass, mild steel, or aluminum shells; and dry-powder extinguishers for metal fires.

iii. Every six years, empty dry-chemical, stored-pressure extinguishers and examine working parts for operability.

iv. Every 12 years, test the pressure parts of Halon 1301 extinguishers; dry-chemical extinguishers with braised-brass, mild steel, and aluminum shells; and dry-powder extinguishers for metal fires.

g. Employee Training

i. Where fire extinguishers are provided for employee use, training will be provided on general principles of portable fire extinguishers, including stages of fires and classes of fire extinguisher. The emphasis should be on hazards of fighting a fire during the initial phases of a fire.

ii. Personnel designated to use firefighting as part of a site Emergency Action Plan must have training in the use of appropriate equipment. Training must be conducted prior to initial assignment and annually thereafter or whenever there is a change in the Emergency Action Plan or new equipment is introduced.

B. Fire Prevention

1. General

a. Develop an Emergency Preparedness Plan as outlined in SMS 003 – Emergency Preparedness Plan.

b. Conduct evacuation drills at least annually.

c. Maintain good housekeeping to reduce fire hazards and to provide safe routes of egress should a fire occur.

d. Conduct periodic workplace inspections to identify fire hazards such as unnecessary accumulation of combustibles (including paper and boxes), unnecessary storage of flammables, and sources of ignition.

2. Ignition Hazards

a. Electrical wiring and equipment for light, heat, or power purposes will be properly installed.

b. Equipment powered by internal combustion will be located with the exhausts positioned away from combustible materials. When the exhausts are piped outside the building under construction, a clearance of at least 6 inches (15 cm) will be maintained between piping and combustible material.

c. Smoking is prohibited at or in the vicinity of operations that constitute a fire hazard. Such areas will be conspicuously posted as follows: "NO SMOKING OR OPEN FLAME."

d. Portable, battery-powered lighting equipment, used in connection with the storage, handling, or use of flammable gases or liquids, will be approved for the hazardous locations. For more information, see SMS 015 – Flammable and Combustible Liquids and Gases.

e. The nozzles of air, inert gas, and steam lines or holes used in the cleaning or ventilation of tanks and vessels containing hazardous concentrations of flammable gases or vapors will be bonded to the tank or vessel shell. Bonding devices will not be attached or detached while hazardous concentrations of flammable gases or vapors exist.

3. Temporary Buildings

a. Temporary buildings will not be erected where the location adversely affects any means of employee exit.

b. Temporary buildings, located within another building or structure, will be of noncombustible construction or combustible construction having a fire resistance rating of not less than 1 hour.

c. Temporary buildings, located other than inside another building and not used for handling and storage of flammable or combustible liquids, flammable gases, explosives, or blasting agents, or similar hazardous occupancies, will be located at a distance of not less than 10 feet (3 meters) from another building or structure. Groups of temporary buildings, not exceeding 2,000 square feet (186 square meters) in total, will be considered a single temporary building.

4. Open Yard Storage

    a. Combustible materials will be stored with regard to the stability of piles and in no case higher than 10 feet (3 meters).

    b. Driveways between and around combustible storage piles will be at least 15 feet (4.6 meters) wide and maintained free of accumulations of rubbish, equipment, or other articles or materials. Driveways will be spaced to produce a maximum grid system unit of 50 feet (15.2 meters) by 150 feet (45.7 meters).

    c. The entire storage site will be kept free from accumulations of unnecessary combustible materials. Weeds and grass will be maintained, and procedures will be established for periodic cleanup of the entire area.

    d. The method of piling combustible materials will be solid and in orderly regular piles. No combustible material will be stored outdoors within 10 feet (3 meters) of a building or structure.

    e. Portable fire extinguishing equipment, suitable for the fire hazard involved, will be provided at convenient, conspicuously accessible locations in the yard area. Portable fire extinguishers, rated not less than 2A:20BC, will be placed to assure that the maximum travel distance to the nearest unit will not exceed 100 feet (30.5 meters).

5. Indoor Storage

    a. Storage will not obstruct, or adversely affect, means of exit.

    b. Materials will be stored, handled, and piled with regard to their fire characteristics.

    c. Noncompatible materials, which may create a fire hazard, will be segregated by a barrier having a fire resistance of at least 1 hour.

    d. Materials will be piled to minimize the spread of fire internally and to permit convenient access for firefighting. Stable piling will be maintained at all times. Aisle space will be

maintained to safely accommodate the widest vehicle used within the building for firefighting purposes.

e. A clearance of at least 36 inches (90 cm) will be maintained between the top level of the stored material and the sprinkler deflectors.

f. Clearance will be maintained around lights and heating units to prevent ignition of combustible materials.

g. A clearance of 24 inches (60 cm) will be maintained around the fire door's path of travel, unless a barricade is provided, in which case no clearance is needed. Material will not be stored within 36 inches (90 cm) of a fire door.

C. Temporary Heating Devices

1. Ventilation

a. Fresh air will be supplied in sufficient quantities to maintain the health and safety of employees. Where natural means of fresh air supply are inadequate, mechanical ventilation will be provided.

b. Heaters used in confined spaces necessitate that special care be taken to provide sufficient ventilation to ensure proper combustion, maintain the health and safety of workmen, and limit temperature increase in the area.

2. Clearance and Mounting

a. Temporary heating devices will be installed to provide clearance to combustible materials not less than the amount shown in the following table:

Minimum Clearance in inches (cm)			
Heating Appliance	Sides	Rear	Chimney Connector
Room heater, circulating type	12 (30)	12 (30)	18 (45)
Room heater, radiant type	36 (90)	36 (90)	18 (45)

b. Temporary heating devices that are listed for installation with lesser clearance than specified in the previous table must be

installed in accordance with the manufacturer's specifications.

c. Heaters not suitable for use on wood floors will not be set directly upon them or other combustible materials. When such heaters are used, they will rest on suitable heat-insulating material or concrete at least 1 inch (2.5 cm) thick or equivalent. The insulating material will extend beyond the heater 2 feet (60 cm) or more in all directions.

d. Heaters used near combustible tarpaulins, canvas, or similar coverings will be located at least 10 feet (3 meters) from the coverings. The coverings will be securely fastened to prevent ignition or upsetting of the heater due to wind action on the covering or other material.

3. Stability

When in use, heaters will be set horizontally level, unless otherwise permitted by the manufacturer's instructions.

4. Solid Fuel Heaters

Solid fuel heaters are prohibited in buildings and on scaffolds.

5. Oil Fired Heaters

a. Flammable liquid-fired heaters will be equipped with a primary safety control to stop the flow of fuel in the event of flame failure. Barometric or gravity oil feed will not be considered a primary safety control.

b. Heaters designed for barometric or gravity oil feed will be used only with integral tanks.

c. Heaters specifically designed and approved for use with separate supply tanks may be directly connected for gravity feed, or an automatic pump, from a supply tank.

5. Documentation Summary

The following documentation will be maintained in the project file:

A. Emergency Action Plans.

B. Fire extinguisher inspection logs.

C. Employee training documentation.

D. Site audits.

E. Evacuation drills.

6. Resources

A. U.S. Occupational Safety and Health Administration (OSHA) Standard – Means of Egress – 29 Code of Federal Regulations (CFR) 1910, Subpart E

B. U.S. OSHA Standard – Exit Routes, Emergency Action Plans, and Fire Prevention Plans – 29 CFR 1910.38

C. U.S. OSHA Standard – Fire Protection – 29 CFR 1910, Subpart L

D. U.S. OSHA Software – Fire Safety Advisor

E. U.S. OSHA Construction Standard – Fire Protection and Prevention – 29 CFR 1926.150, Subpart F

F. National Fire Protection Association – Standard for Portable Fire Extinguishers – NFPA 10

G. International Code Council – International Fire Code

H. SMS 003 – Emergency Preparedness Plan

I. SMS 015 – Flammable and Combustible Liquids and Gases

7. Supplemental Information

A. Fire Classifications

B. General Fire Extinguisher Requirements

A. Fire Classifications

Fires are classified as Class A, B, C, D, or Special, depending upon the types of materials involved. These classifications are defined as follows:

1. Class A – Fires in ordinary combustible materials such as wood, cloth, paper, trash, rubber, and plastic.

2. Class B – Fires in flammable liquid, oil, grease, tar, oil-base paint, lacquer, and flammable gas.

3. Class C – Fires involving energized electrical equipment or systems, resulting in the extinguishing media conducting electricity. When electrical equipment or systems are de-energized, extinguishers for Class A or B fires can be used safely.

4. Class D - Fires involving combustible metals such as magnesium, titanium, zirconium, lithium, potassium, and sodium. Specialized techniques, extinguishing agents, and extinguishing equipment have been developed to control and extinguish fires of this type. Generally, do not use normal extinguishing agents on metal fires. In such fires, there is the danger of increasing the intensity of the fire because of a chemical reaction between some extinguishing agents and the burning metal.

5. Special - Fires that involve certain combustible metals or reactive chemicals require, in some cases, special extinguishing agents or techniques.

B. Extinguisher Classifications and Ratings

All types of extinguishers are not equally effective against all classifications of fires. Therefore, extinguishers are rated according to the classification and size of the fires against which they are effective. Extinguisher ratings are found on the extinguisher label. A rating consists of a letter indicating the classification of fire on which the extinguisher is effective and a rating number indicating the relative extinguishing effectiveness. The significance of the rating number varies with the classification of fire for which the extinguisher is rated. The following rating criteria are used:

1. For extinguishers rated for Class A fires, the rating number indicates relative effectiveness, the higher the number, the more effective the extinguisher. The minimum recommended rating for extinguishers rated for Class A fires is 2A.

2. For extinguishers rated for Class B fires, the rating number represents the average size (in square feet) of the fire the extinguisher could put out.

3. No number is used for extinguishers rated for Class C fires, because Class C fires are essentially either Class A or B fires involving energized electrical wiring and equipment.

C. Hazard Classifications

The materials in a building or area present hazards of varying potential. These hazards are classified. As follows:

1. Light or Low Hazard – A room or area where, considering the amount of combustible material or flammable liquids present, fires of small size should be anticipated (e.g., change trailers, toilet trailers, and general storage).

2. Ordinary or Moderate Hazard – A location where, considering the amount of combustibles or flammable liquids present, fires of moderate size should be anticipated (e.g., temporary construction offices and most shops).

3. Extra or High Hazard – A location where, considering the amount of combustibles or flammable liquids present, fires of severe magnitude should be anticipated (e.g., carpenter shops and storage areas for flammable liquids and lumber).

1. Fire Extinguishers – General

The following are **minimum** requirements for fire extinguisher placement in office buildings, construction facilities, support buildings, and/or buildings under construction. In some cases, client requirements may be more stringent, in which case the client's requirements supersede the guidelines below.

Extinguisher Requirements for Class A Hazards

Rating Shown on Extinguisher	Maximum Travel Distance to Extinguishers in Feet (m)	Maximum Area to be Protected per Extinguisher		
		Light Hazard sq. ft. (m²)	Ordinary Hazard sq. ft. (m²)	Extra Hazard sq. ft. (m²)
1-A	-	-	-	-
2-A	75 (23)	6,000 (557)	3,000 (279)	-
3-A	75 (22.9)	9,000 (836)	4,500 (418)	3,000 (279)
4-A	75 (22.9)	11,250 (1,045)	6,000 (557)	4,000 (372)
6-A	75 (22.9)	11,250 (1,045)	9,000 (836)	6,000 (557)
10-A	75 (22.9)	11,250 (1,045)	11,250 (1,045)	10,000 (929)
20-A	75 (22.9)	11,250 (1,045)	11,250 (1,045)	11,250 (1,045)
40-A	75 (22.9)	11,250 (1,045)	11,250 (1,045)	11,250 (1,045)

Extinguisher Requirements for Class B Hazards

Type of Hazard	Minimum Extinguisher Rating	Maximum Travel Distance to Extinguishers in Feet (m)
Light	**5-B**	**30 (9.1)**
	10-B	**50 (15.2)**
Ordinary	**10-B**	**30 (9.1)**
	20-B	**50 (15.2)**
Extra	**40-B**	**30 (9.1)**
	80-B	**50 (15.2)**

Extinguisher Requirements for Class C Hazards

Class C extinguishers are required wherever energized electrical equipment is located. Since a Class C fire itself is either Class A or Class B (involving ordinary combustible material, flammable liquids, or flammable gases), the extinguishers are sized and located as for a Class A or B hazard.

Types of Extinguishers Approved for Types of Hazards

Class A Hazards	Class B Hazards	Class C Hazards
Cartridge-operated water or antifreeze	Carbon dioxide*	Carbon dioxide
Stored pressure water or antifreeze	Dry chemical	Dry chemical
Wetting Agent Foam	Multipurpose dry chemical (ABC)	Multipurpose dry chemical (ABC)
Loaded stream	Halon 1301	Halon 1301
Multipurpose dry chemical (ABC)	Halon 1211	Halon 1211
Pump tank water or antifreeze (Halon 1211)		

*Certain sizes are not classified or acceptable to meet requirements.

2. Hot Work

A minimum of one fire extinguisher, rated at least 20BC, must be provided for each hot work location. The extinguisher should be conspicuously positioned no more than 10 feet (3.04 meters) from the hot work. Refer to SMS 020- Hot Work".

3. Motorized Construction Equipment

At least one portable fire extinguisher, rated at least 20BC, must be provided on each piece of motorized construction equipment.

4. Temporary Construction/Work Trailer

A minimum of one fire extinguisher, rated at a minimum of 2A, must be provided for each temporary construction/work trailer.

URS SAFETY MANAGEMENT STANDARD

Flammable and Combustible Liquids and Gases

1. Applicability

This standard applies to all operations of URS Corporation and its subsidiary companies.

2. Purpose and Scope

The purpose of this standard is to provide information regarding the proper storage, handling and work practices associated with flammable and combustible liquids and gases.

3. Procedures

The associated implementing regional procedures for this standard are included as attachments:

SMS 015 NA – North America

SMS 015 INT – International Operations (including Europe, Asia, South America and Africa)

SMS AP7-015 – Australia / New Zealand

URS SAFETY MANAGEMENT STANDARD

Flammable and Combustible Liquids and Gases

1. Applicability

This standard applies to all operations of URS Corporation and its subsidiary companies.

2. Purpose and Scope

The purpose of this standard is to provide information regarding the proper storage, handling, and work practices associated with flammable and combustible liquids and gases.

3. Implementation

Implementation of this standard is the responsibility of the URS manager directing activities of the facility, site, or project location.

4. Requirements

A. Appoint a Responsible Person who will:

1. Determine if flammable or combustible liquids and gases are stored on-site. Flammable liquids have a flash point of less than 100 degrees Fahrenheit (°F) (37.8 degrees Celsius [°C]). Combustible liquids have a flash point greater than or equal to 100°F (37.8°C). These liquids are further divided into three classes (I, II, III) and subclasses (A, B, C) as summarized in Attachment 015-1 NA.

2. Inspect storage areas monthly.

3. Monitor the quantity of flammable and combustible liquids and gases on the site.

4. Review work practices involving flammable and combustible liquids and gases.

5. Material safety data sheets (MSDS) for all hazardous substances, including flammable and combustible liquids, must be provided by vendors or subcontractors, and maintained on site. For more information, see SMS 002 – Hazard Communication.

6. Furnish portable fire extinguishers in such quantities, sizes, and types as needed for the special hazards of operation and storage. For more information, see SMS 014 – Fire Prevention and Protection.

B. Control flammable and combustible liquids and gases entering the site by ordering only those materials and quantities that are needed to complete a job.

C. Cylinders – General Use & Transport

1. Open and close cylinder valves using the appropriate tools provided by the cylinder supplier.

2. Remove regulators and replace caps before transporting cylinders.

3. Do not roll or drop cylinders. Transport cylinders in a vertical and secured positing using a cylinder basket, cylinder cart or other secure equipment.

4. Do not use cylinders if the cap can not be removed by hand. Do not use tools (e.g., hammer) to loosen caps. Tag the cylinder “Do Not Use” and return the cylinder to a designated storage area to be returned to the cylinder supplier.

5. Welding gas and oxygen cylinders must be stored at a minimum of 20 feet (6.1 meters) apart or separated by a 5 foot (1.5 meters) high firewall that is rated for a minimum of ½ hour.

D. General Storage

1. Use only approved containers, tanks, and pumping equipment for storage and handling of flammable and combustible liquids. Use approved (UL or FM) metal safety cans (with spring-closing lid and spout cover, and optional flash-arresting screen) for the handling and use of flammable liquids in 1- to 5-gallon (4- to 19-liter) quantities. For additional information, see Attachment 015-1 NA – Flammable and Combustible Liquid Classifications.

2. Segregate gas cylinders based on hazards. Store oxygen separately from acetylene or other flammables. Store cylinders in secure and upright position, with caps secure and cylinders marked as to the contents and hazards.

3. Place all rags, waste, etc., soiled by combustible or flammable materials in tightly closed metal containers for daily disposal.

4. Take precautions, including proper ventilation, to prevent the ignition of flammable vapors. Sources of ignition include, but are not limited to: open flames; lightning; smoking; cutting and welding;

hot surfaces; frictional heat; static, electrical, and mechanical sparks; spontaneous ignition; chemical reactions; and radiant heat.

5. Require approved personal protective equipment for all persons handling flammable or combustible liquids, as outlined by the appropriate MSDS.

6. Train employees exposed to flammable or combustible liquids in the hazards of these materials; in their safe handling, use and disposal; in their protection from ignition sources; in the type, use, and placement of containers and cabinets; in the location of fire extinguishers; in the protection against toxic vapors; and in the procedures to follow in case of spill or fire.

E. Indoor Storage

1. Keep indoor storage of flammable liquids to a minimum. Do not store more than 25 gallons (95 liters) of flammable or combustible liquids outside of an approved storage cabinet.

2. Do not store flammable or combustible liquids in areas used for exits, stairways, or normally used for the safe passage of people.

3. Do not store more than 120 gallons (454 liters) of flammable and combustible liquids in a single flammable storage cabinet; of these liquids, not more than 60 gallons (227 liters) can be Class I and II flammable liquids. Do not store oxidizers and other reactive chemicals in flammable cabinets.

4. Up to three cabinets may be grouped together. Groups of cabinets must be separated by at least 100 feet (30.5 meters).

5. Conspicuously label all cabinets “Flammable—Keep Fire Away.”

6. Indoor flammable liquid storage rooms must conform to NFPA codes, including requirements regarding fire ratings, spill containment, maximum capacity, electrical classifications, and ventilation requirements.

7. Storage of liquefied petroleum gas (LPG) within buildings is prohibited, and outdoor storage or LPG must meet applicable building and fire codes.

F. Outside Storage

1. Maintain a minimum of 20 feet (6.1 meters) between flammable and combustible storage areas and any building.

2. Storage of containers (not more than 60 gallons [227 liters] each) cannot exceed 1,100 gallons (4,164 liters) in any one pile or area.

3. Grade the storage area in a manner to divert possible spills away from buildings, and curb or dike so as to contain entire volume of liquids and prevent spills from impacting soil or groundwater.

4. Keep the entire storage site free from accumulation of unnecessary combustible materials. Closely cut weeds and grass, and establish a regularly scheduled cleanup procedure for the whole area.

5. Maintain adequate access-ways to open-yard storage to allow access by fire-fighting equipment. Equipment that is blocking access must be manned at all times so that it may be readily moved if necessary.

G. Labeling and Signage

1. Post a "NO SMOKING OR OPEN FLAME" sign in all areas where flammable and combustible materials are stored, handled, and processed.

2. Require all containers and cylinders to be labeled with the contents and adequate hazard warnings per SMS 002 – Hazard Communication.

3. Properly label cylinders that will no longer be used or are empty and place in a designated area to be returned to the cylinder supplier.

H. Use of Materials on Site

1. Use flammable and combustible liquids and gases in a manner that is consistent with the label and MSDS for the product.

2. Use only those amounts of materials needed for the job. Transfer of these materials to ready-to-use containers is encouraged.

3. Use personal protective equipment stated on the product label and MSDS. For additional information, consult SMS 029 – Personal Protective Equipment.

4. For dispensing and/or fueling operations, ensure:

a. Signs are posted with instructions on the dispensing or fueling process.

b. Operators have been trained in the dispensing or fueling process.

c. Equipment being refueled has the engine shut off prior to fueling.

d. Smoking is prohibited in vehicle and equipment refueling areas.

e. Adequate protection is provided to safeguard dispensing pumps from physical damage from vehicles.

f. Dispensing nozzles have auto shut-off or self closing valves and provisions for containing or controlling over-spillage.

g. Heating equipment installed in lubrication or service areas, where flammable liquids are dispensed, is of an approved type, and where feasible, is installed at least 8 feet (2.4 meters) above the floor.

h. Tank cars and trucks being loaded or unloaded and flammable storage tanks and systems are properly bonded and grounded.

i. Transfer of flammable liquids from one container to another is done only when containers are electrically interconnected (bonded).

j. Proper PPE is required during the dispensing or fueling process. For additional information, see SMS 029 – Personal Protective Equipment; and Attachment 015-2 NA – Flammable, Combustible, Oxidizer, and Compressed Gas Inspection Checklist.

I. Spill Control

1. Have a written spill response plan in place before materials are stored or used on site. Any project with an aggregate aboveground storage of more than 1,320 gallons or underground quantity of 42,000 gallons of diesel fuel, petroleum-based oils, gasoline, and oil lubricants must have a current Spill Prevention Control and Countermeasures (SPCC) plan.

2. Clean up or respond to spills promptly according to applicable local, state, and federal regulations. This may require notification of authorities if a Reportable Quantity (RQ) is exceeded.

3. Move leaking cylinder to a ventilated area away from ignition sources. Do not attempt to repair a leaking cylinder. Contact the cylinder supplier to determine proper response methods.

J. Disposal

1. Keep solvent waste and flammable liquids in fire-resistant, covered containers until they are removed from the worksite.

2. Do not place flammable or combustible waste in municipal garbage.

3. Do not pour flammable or combustible liquids down drains or onto the ground.

4. Dispose of flammable or combustible hazardous materials with a licensed and approved hazardous material disposal company.

K. Inspection

1. Inspect flammable and combustible storage and use areas and gas storage areas on a monthly basis.

2. Use the inspection sheet provided as Attachment 015-2 NA to inspect the storage areas.

3. Inspect cylinder regulators, gauges, valves, hoses and connections before use. Any damaged equipment shall be tagged out-of-service.

4. Regulators shall be specific to the gas being used and no adapters may be used to connect regulators to cylinders.

L. Training

Require that hazard communication training includes specific hazard information for the flammables and combustibles used.

J. Compliance

Review and comply with country and client/customer-specific requirements.

5. Documentation Summary

The following information will be maintained in the project file:

A. Location of the MSDS inventory

B. Completed Flammable and Combustibles Inspection Checklist (Attachment 015-2 NA)

6. Resources

A. National Fire Protection Association – Liquefied Petroleum Gas Code – Standard 58, Flammable and Combustible Liquids Code – Standard 30, Isolated Construction Projects – Standard 395

B. Regulations of the U.S. Coast Guard – Carriage of Flammable and Combustible Cargo

C. U.S. Occupational Safety and Health Administration (OSHA) Standard – Flammable and Combustible Liquids – 29 CFR 1910.106,

D. U.S. Occupational Safety and Health Administration (OSHA) Standard – Spray Finishing using Flammable and Combustible Materials – 29 CFR 1910.107,

E. U.S. Occupational Safety and Health Administration (OSHA) Standard – Flammable and Combustible Liquids (Construction Standard) – 29 CFR 1926.152

F. Uniform Fire Code – Flammable and Combustible Liquids – Article 79

G. SMS 002 – Hazard Communication

H. SMS 014 – Fire Prevention and Protection

I. SMS 029 – Personal Protective Equipment

J. Attachment 015-1 NA – Flammable and Combustible Liquid Classifications

K. Attachment 015-2 NA – Flammable, Combustible, Oxidizer, and Compressed Gas Inspection Sheet

Flammable Liquid	Flash Point	Boiling Point
Class 1A	< 73° F (22.8°C)	< 100° F (37.8°C)
Class 1B	< 73° F (22.8°C)	> 100° F (37.8°C)
Class 1C	> 73° F (22.8°C) < 100° F (37.8°C)	
Combustible Liquid		
Class 2	> 100° F (37.8°C) < 140° F (60°C)	
Class 3	≥ 140° F (60°C)	

Maximum Allowable Size of Containers and Portable Tanks

Container Type	Flammable Liquids			Combustible Liquids	
	Class 1A	Class 1B	Class 1C	Class II	Class III
Glass or approved plastic	1 pint (0.5 liter)	1 quart (1 liter)	1.3 gallons (5 liters)	1.3 gallons (5 liters)	1.3 gallons (5 liters)
Metal (other than drums) or approved plastic	1.3 gallons (5 liters)	5.3 gallons (20 liters)	5.3 gallons (20 liters)	5.3 gallons (20 liters)	5.3 gallons (20 liters)
Safety cans	2.6 gallons (10 liters)	5.3 gallons (20 liters)	5.3 gallons (20 liters)	5.3 gallons (20 liters)	5.3 gallons (20 liters)
Metal drums (DOT specifications)	119 gallons (450 liters)	119 gallons (450 liters)	119 gallons (450 liters)	119 gallons (450 liters))	119 gallons (450 liters))
Approved metal portable tanks	793 gallons (3,000 liters)	793 gallons (3,000 liters)	793 gallons (3,000 liters)	793 gallons (3,000 liters)	793 gallons (3,000 liters)

URS	Health, Safety and Environment **FLAMMABLE, COMBUSTIBLE, OXIDIZER, AND COMPRESSED GAS INSPECTION CHECKLIST**	Attachment 015-2 NA Issue Date: June 1999 Revision 5: September 2011

Location Inspected: _____ **Job No.:** _____

Date Inspected: _____ **Name of Inspector:** _____

	Storage Cabinets			
1.	Flammable cabinets do not obstruct room exits.	☐ Yes	☐ No	☐ NA
2.	No more than 60 gallons (227 liters) of flammable or 120 gallons (454 liters) of combustible liquid are stored in a cabinet.	☐ Yes	☐ No	☐ NA
3.	No more than three cabinets are located in a storage area.	☐ Yes	☐ No	☐ NA
4.	Metal storage cabinets have self-closing doors.	☐ Yes	☐ No	☐ NA
5.	Cabinets are labeled “FLAMMABLE – KEEP FIRE AWAY”	☐ Yes	☐ No	☐ NA
	Safety Cans			
6.	Safety cans are constructed of stainless steel, Monel, or tin.	☐ Yes	☐ No	☐ NA
7.	Safety cans have a flame arrestor and spring-loaded cap on both the filling and pouring spouts.	☐ Yes	☐ No	☐ NA
	Drum & Drum Storage Areas			
8.	Drums are stored in a vertical position.	☐ Yes	☐ No	☐ NA
9.	Bungs are closed when liquid is not being transferred.	☐ Yes	☐ No	☐ NA
10.	Drums are shielded from the sun.	☐ Yes	☐ No	☐ NA
11.	Funnels with installed flash arrestor are used when transferring flammable liquids into drums.	☐ Yes	☐ No	☐ NA
12.	A minimum distance of 25 feet (7.6 meters) between a drum storage area and buildings is present.	☐ Yes	☐ No	☐ NA
13.	A “NO SMOKING” sign is posted in the area.	☐ Yes	☐ No	☐ NA
14.	An emergency spill kit is located near the drum storage area.	☐ Yes	☐ No	☐ NA
15.	A 20-pound dry-chemical fire extinguisher is located no less than 10 feet (3 meters) or more than 50 feet (15 meters) from the storage area.	☐ Yes	☐ No	☐ NA
	Waste Cans			
16.	Combustible scrap, debris, and waste materials (oily rags, etc.) are stored in covered metal cans.	☐ Yes	☐ No	☐ NA
17.	Waste cans are removed from the work area daily.	☐ Yes	☐ No	☐ NA
18.	Waste cans have spring-loaded self-closing lids.	☐ Yes	☐ No	☐ NA
	Storage Rooms Designed Specifically For Flammable Materials			
19.	Room construction meets NFPA fire-resistance requirements.	☐ Yes	☐ No	☐ NA
20.	Rooms with automatic extinguishing systems have the following:			
	• Noncombustible liquid-tight raised sills or ramps at least 4 inches (0.36 meters) in height.	☐ Yes	☐ No	☐ NA
	• Flooring at least 4 inches (0.36 meters) below the surrounding floor, or an open-grated trench that drains to a safe location.	☐ Yes	☐ No	☐ NA
	• Openings with approved self-closing fire doors.	☐ Yes	☐ No	☐ NA
	• Liquid-tight construction where the walls join the floors.	☐ Yes	☐ No	☐ NA

	• Shelving, racks, dunnage floor overlay, and other interiors with 1-inch wood.	☐ Yes ☐ No ☐ NA
21.	Rooms are ventilated by a gravity or mechanical exhaust system that:	
	• Commences not more than 1 foot (0.3 meter) above the floor.	☐ Yes ☐ No ☐ NA
	• Is designed to provide for a complete change of air within the room at least six times per hour.	☐ Yes ☐ No ☐ NA
	• Is controlled by a switch located outside the door, with ventilating equipment and any light fixtures operated from the same switch.	☐ Yes ☐ No ☐ NA
	Flammable & Combustible Storage Areas Within Buildings	
22.	At least one portable fire extinguisher rated not less than 20-B is located outside of but not more than 10 feet (3 meters) from the door opening into any room used for the storage of more than 60 gallons (227 liters) of flammable or combustible liquids.	☐ Yes ☐ No ☐ NA
23.	Buildings or rooms are locked when not occupied.	☐ Yes ☐ No ☐ NA
24.	Exits, stairways, or passageways are not used for storing flammables and combustibles.	☐ Yes ☐ No ☐ NA
25.	No more than 25 gallons (95 liters) of Class IA or 60 gallons (227 liters) of Class IB, II, or III liquids are located in a room outside of a flammable storage locker or flammable storeroom.	☐ Yes ☐ No ☐ NA
26.	An aisle at least 3 feet (0.91meters) wide is maintained in storage areas.	☐ Yes ☐ No ☐ NA
27.	No more than those amounts needed for one day's use are stored in buildings under construction.	☐ Yes ☐ No ☐ NA
	Outside Storage of Flammable and Combustible Liquids	
28.	At least one portable fire extinguisher having a rating of not less than 20-B is located not less than 25 feet (7.6 liters) or more than 75 feet (22.8 liters) from any outside flammable liquid storage area.	☐ Yes ☐ No ☐ NA
29.	For containers not more than 60 gallons each (227 liters), no more than 1,100 gallons (4,164 liters) in any one group are stored.	☐ Yes ☐ No ☐ NA
30.	Groups of containers are separated by 5-foot (1.52 meters) clearances.	☐ Yes ☐ No ☐ NA
31.	Groups of containers are more than 50 feet (15 meters) from buildings.	☐ Yes ☐ No ☐ NA
32.	Portable tanks (not exceeding 660 gallons [2,498 liters] in capacity) are provided with emergency venting devices as specified by NFPA 30.	☐ Yes ☐ No ☐ NA
33.	Storage areas are free of accumulation of weeds, debris, and other combustible materials not necessary to the storage.	☐ Yes ☐ No ☐ NA
	Storage Tanks	
34.	Tanks have relief vents.	☐ Yes ☐ No ☐ NA
35.	Tank vents are not close to open flames, stacks, heating apparatus, or any other source of ignition.	☐ Yes ☐ No ☐ NA
36.	A dike or curb or other suitable means to prevent the spread of leakage from tanks.	☐ Yes ☐ No ☐ NA
37.	Diked areas have a capacity equal in volume to at least that of the largest tank plus 10 percent of all other tanks in the enclosure.	☐ Yes ☐ No ☐ NA
38.	Provisions to drain off accumulations of ground- or rainwater or spills in diked areas.	☐ Yes ☐ No ☐ NA
	Dispensing of Flammable and Combustible Liquids	
39.	Dispensing outlets for above-ground tanks with nationally listed automatic-closing valve, without a latch-open device.	☐ Yes ☐ No ☐ NA
40.	Dispensing systems are electrically bonded and grounded.	☐ Yes ☐ No ☐ NA

41.	Tanks, hoses, and containers of 5 gallons (19 liters) or less in metallic contact while transferring flammable liquids.	☐ Yes	☐ No	☐ NA
42.	Electrically bonded systems are used for transferring flammable liquids in containers in excess of 5 gallons (19 liters).	☐ Yes	☐ No	☐ NA
43.	Closed piping systems are used for drawing flammable liquids during transfer.	☐ Yes	☐ No	☐ NA
44.	Flammables and combustibles are drawn from a container or portable tank by use of gravity or through a pump using an approved self-closing valve.	☐ Yes	☐ No	☐ NA
	Liquefied Petroleum Gas – Refueling			
45.	Equipment is shut down during refueling operations.	☐ Yes	☐ No	☐ NA
46.	Leather gloves and safety glasses are worn during refueling operations.	☐ Yes	☐ No	☐ NA
47.	Smoking and hot work is prohibited during refueling.	☐ Yes	☐ No	☐ NA
48.	Refueling occurs at least 25 feet (7.6 meters) from buildings.	☐ Yes	☐ No	☐ NA
	Compressed Gases – Storage			
49.	Cylinders must be capped when regulators are removed.	☐ Yes	☐ No	☐ NA
50.	Oxygen and fuel cylinders are stowed in designated well-ventilated areas.	☐ Yes	☐ No	☐ NA
51.	Storage areas have temperatures less than 130º F (54.4º C).	☐ Yes	☐ No	☐ NA
52.	Cylinders are stored upright and secured from falling over.	☐ Yes	☐ No	☐ NA
53.	Cylinders are in segregated groups by gas type and not intermingled with other cylinders.	☐ Yes	☐ No	☐ NA
54.	Oxygen cylinders are stored at least 20 feet (6.1 meters) away from flammables. (A fire-resistive partition of at least 1-hour fire-resistance rating of at least 5-foot (1.52 meters) height may also be used.)	☐ Yes	☐ No	☐ NA
55.	Flammable or combustible materials are kept at least 20 feet (6.1 meters) away from stored cylinders.	☐ Yes	☐ No	☐ NA
56.	Gas cylinder valves are protected from snow and ice during winter months.	☐ Yes	☐ No	☐ NA
57.	Oxygen cylinders are kept free from oil and grease.	☐ Yes	☐ No	☐ NA
58.	Welding cylinders are securely fastened to ready-use racks.	☐ Yes	☐ No	☐ NA
59.	Smoking or open flames are not permitted in areas where cylinders are stored.	☐ Yes	☐ No	☐ NA
60.	Cylinder storage areas are posted with the following sign: "DANGER – NO SMOKING OR OPEN FLAME"	☐ Yes	☐ No	☐ NA
61.	Cylinders are labeled with gas contents and warning statement.	☐ Yes	☐ No	☐ NA
62.	Empty cylinders are segregated from full cylinders.	☐ Yes	☐ No	☐ NA
	Oxidizers			
63.	Oxidizers are stored separately from flammables.	☐ Yes	☐ No	☐ NA
64.	When oxidizers are shifted to a second container, the container is labeled with the appropriate warning labels.	☐ Yes	☐ No	☐ NA
65.	Secondary containers are compatible with oxidizers.	☐ Yes	☐ No	☐ NA
66.	Oxidizers are stored away from heat sources where the maximum temperature exceeds 100º F (37.8º C).	☐ Yes	☐ No	☐ NA
67.	Chromic acid, nitric acid, perchloric acid, and potassium permanganate (all oxidizers) are stored separately from other corrosives and flammables.	☐ Yes	☐ No	☐ NA

URS SAFETY MANAGEMENT STANDARD

Hand Tools and Portable Equipment

1. Applicability

This standard applies to all operations of URS Corporation and its subsidiary companies.

2. Purpose and Scope

The purpose of this standard is to provide procedures for the safe use and handling of hand tools and power equipment. Additional information on hand safety is provided in SMS 064 – Hand Safety.

3. Procedures

The associated implementing regional procedures for this standard are included as attachments:

SMS 016 NA – North America

SMS 016 INT – International Operations (including Europe, Asia, South America and Africa)

SMS AP6-016 –Australia / New Zealand

URS SAFETY MANAGEMENT STANDARD

Hand Tools and Portable Equipment

1. Applicability

This standard applies to URS Corporation and its subsidiary companies in which hand tools and/or portable powered equipment, including chain saws; brush cutters, powder-actuated tools, and similar high-hazard implements are used.

2. Purpose and Scope

The purpose of this standard is to provide procedures for the safe use and handling of hand tools and portable powered equipment. SMS 064 – Hand Safety provides additional information on the safe use of hand tools.

3. Implementation

Implementation of this standard is the responsibility of the URS manager directing activities of the facility, site or project location.

4. Requirements

A. General

1. Keep hand and power tools in good repair and use them only for the task for which they were designed. Use tools only in accordance with the manufacturer's recommendations.

2. Remove damaged or defective tools from service. Affix a "Do Not Use" tag (or similar) to the tool until repairs are made or the tool is destroyed.

3. Provide employees using hand tools or portable powered equipment with personal protective equipment (PPE) and train employees in the use of PPE required for the operation being undertaken.

4. Keep surfaces and handles clean and free of excess oil and grease to prevent slipping.

5. Do not carry sharp tools in pockets; this practice may cause puncture wounds.

6. Clean tools and return to a suitable toolbox, room, rack, or other storage area upon completion of a job.

7. Before applying pressure, ensure that wrenches have a good bite.

a. Brace yourself by placing your body in the proper position so that that you will not fall in case the tool slips.

b. Make sure hands and fingers have sufficient clearance in the event the tool slips.

c. Always pull on a wrench, never push.

8. When working with tools overhead, place tools in a holding receptacle or secure when not in use to prevent them from falling.

9. Do not leave tools in or on passageways, access ways, walkways, ramps, platforms, stairways, or scaffolds where they can create a tripping hazard.

10. Do not throw tools from place to place or from person to person, or drop tools from heights.

11. Use nonsparking tools in atmospheres with fire or explosive characteristics.

12. Inspect all tools prior to start-up or use to identify any defects.

13. Powered hand tools should not be capable of being locked in the ON position, except as noted elsewhere in this standard.

14. Require that all power-fastening devices be equipped with a safety interlock capable of activation only when in contact with the work surface.

15. Ensure that all portable powered tools designed to accommodate guards are equipped with such when in use.

16. Do not allow loose clothing, long hair, loose jewelry, rings, and chains to be worn while working with power tools.

17. Do not use cheater pipes.

18. Make provisions to prevent machines from automatically restarting upon restoration of power (see SMS 023 – Lockout and Tagout Safety).

19. Where URS issues tools to its employees, the supervisor is responsible for the safe condition of tools and equipment.

20. Where workers furnish their own tools, their tools must conform to the requirements demanded for safety and efficiency. The supervisor has the responsibility to regularly inspect these tools for defects.

B. Electrical Power Tools

1. Electric-power–operated tools will be either of the approved double-insulated type or grounded in accordance with the National Electric Code.

2. The use of the electric cord for hoisting or lowering electric tools is an unsafe practice and will not be permitted.

3. All handheld powered drills, tappers, fastener drivers, horizontal, vertical, and angle grinders with wheels greater than 2 inches (5.1 centimeters) in diameter, disc sanders, belt sanders, reciprocating saws, saber saws, and other similar operating powered tools will be equipped with a momentary contact ON/OFF control and may have a lock-on control provided that turnoff can be accomplished by a single motion of the same finger or fingers that turn it on.

4. All other handheld powered tools such as circular saws, chain saws, and percussion tools without positive accessory holding means will be equipped with a constant pressure switch that will shut off the power when the pressure is released (i.e., “dead man” switch).

C. Grinding Tools

1. Inspect work rests and tongue guards for grinders.

    a. Work rest gaps should not exceed ⅛ inch (3 mm).

    b. Tongue guard gaps should not exceed ¼ inch (6 mm).

2. Do not adjust work, guards, or tool rests while the grinding wheel is moving.

3. Inspect the grinding wheel for cracks, chips, defects, or excessive wear. Remove from service if any defects are found.

4. Wear goggles when grinding. A clear full face shield may be worn with the goggles.

5. Do not use the side of a grinding wheel unless the wheel is designed for side grinding.

6. Always stand to the side of the blade, never directly behind it.

7. Use grinding wheels only at their rated speed.

8. Grinding aluminum is prohibited.

9. For operations in the United Kingdom:

    a. No grinding wheels exceeding 55 mm are to be used.

    b. All wheels are to be marked with their safe maximum speed.

    c. Abrasive wheels will be operated only by personnel who have been specifically trained and specified competent by URS.

    d. Abrasive wheels will be operated only by persons specified as competent, under the abrasive wheel regulations.

    e. Abrasive wheels must be operated only if the manufacturer's guard is fitted and they are in good working order.

D. Power Saws

1. Require that circular saws are fitted with blade guards.

2. Inspect each day prior to use. Remove damaged, bent, or cracked saw blades from service immediately.

3. Require that table saws are fitted with blade guards and a splitter to prevent the work from squeezing the blade and kicking back on the operator.

4. Require guards that cover the blade to the depth of the teeth on hand-held circular saws. The guard should freely return to the fully closed position when withdrawn from the work surface.

E. Woodworking Machinery

1. Do not leave woodworking tools running when unattended.

2. Keep the operating table and surrounding area clear of debris.

3. Do not use compressed air to remove dust and chips from woodworking machinery.

4. Locate the ON/OFF switch to prevent accidental start-up. The operator must be able to shut off the machine without leaving the workstation. Safety goggles and kickback aprons should be provided for and worn by operators. Respirators or local exhaust ventilation may also be necessary based on the type of material being cut or sanded.

5. Guard planers and joiners to prevent contact with the blades throughout the full length of the cutting area.

6. Ensure that band saw blades are fully enclosed except at the point of operation.

7. Require that swing cut-off saws have a guard completely covering the upper half of the saw.

8. Require that circular cross-cut and rip saws are provided with a hood guard, splitter, and anti-kickback device. The hood should adjust itself automatically to the thickness of and remain in contact with the material being cut. All circular saws will be provided with a hood guard.

9. Ensure that exposed parts of the saw blade under the table are properly guarded.

10. Equip all swing cutoff and radial saws that are drawn across a table with limit stops to prevent the saw from traveling beyond the edge of the table.

11. Hold the material being cut firmly against a back guide or fence and cut with a single, steady pass.

12. Cut green or wet material slowly and with caution. Check all material being cut for nails, hard knots, etc.

13. Use a push stick when:

a. The cutting operation requires the hands of the operator to come close to the blade.

b. Small pieces are being machined.

14. When cutting long stock, provide extension tables and a helper to assist the operator.

15. Adjust saw blades so they clear only the top of the cut.

16. Automatic feed devices should be used whenever feasible.

17. When drills are used:

    a. Take care to prevent clothing from being wound around the drill. Wear sleeves buttoned at the wrist or short-sleeved shirts.

    b. Clamp or hold down material being drilled to prevent spinning with the drill.

    c. If the bit is long enough to pass through the material, provide against damage and injury.

    d. Secure magnetic drills with a chain or rope to prevent falling. Label cord connections to prevent unplugging.

18. When sanders are used:

    a. Move sanders away from the body.

    b. Because dust may create an explosion hazard, guard against open flames and sparks.

F. Pneumatic Tools and Equipment

1. Require that pneumatic tools have:

    a. Tool retainers to prevent the tool from being ejected from the barrel during use.

    b. Safety clips, chains, tie wires, or other retaining devices to secure connections between tool/hose/compressor to prevent whipping in case of disconnection or failure.

2. Do not lay hose in walkways, on ladders, or in any manner that presents a tripping hazard.

3. Never use compressed air to blow dirt from hands, face, or clothing.

4. Do not use compressed air for cleaning purposes unless the pressure is reduced to 30 pounds per square inch (psi) or less. This rule does not apply for concrete form, mill scale, green cutting, and similar cleaning operations. Proper respiratory, hand, eye, and ear protection must be worn.

5. Never raise or lower a tool by the air hose.

6. Shut off the pressure and exhaust from the line before disconnecting the line from any tool or connection.

G. Powder-Actuated Fastener Tools

1. Use powder-actuated tools that comply with the requirements of the American National Standards Institute (ANSI)/American Society of Safety Engineers (ASSE) Standard A10.3 – 2006 – Powder-Actuated Fastening Systems.

2. Assess local and state regulations governing the use of these tools to ensure compliance.

3. Use only individuals who have been trained by a manufacturer's representative and possess the proper license to operate, repair, service, and handle powder-actuated tools.

4. With each tool, the manufacturer or supplier should furnish a detailed instruction manual covering the application, operation, and maintenance of the tool. The manufacturer's recommendation for size of charge, stud unit, or pin, and for specific application must be followed explicitly by the operator.

5. Keep cartridges or shells in the original containers, in separate metal containers, or in the carrying case provided with the tool, and then stored in locked containers. Keep cartridges of varied charges or forces segregated from each other.

6. Take precaution, as defined by the manufacturer, in the event of a misfire.

7. Provide information from the manufacturer on the safe use, testing, and maintenance of each type of tool in each tool kit.

8. Never use a powder-actuated tool in a flammable or explosive atmosphere.

9. Require the use of goggles or a full face shield as well as safety glasses during operation of powder-actuated tools.

10. Use only tools that are provided with a shield or muzzle guard. This shield or guard should be of a size, design, and material that will effectively confine flying particles and prevent escape of ricocheting studs and pins.

11. Ensure that powder-actuated tools are not able to be fired unless the tool is pressed against the work surface.

12. Always handle powder-actuated tools like firearms, with hands clear of the muzzle and barrel pointed away from all persons, especially when the tool is being closed or assembled after loading.

13. Ensure that the tool is not able to fire if the tool is dropped when loaded.

14. Ensure that firing the tool requires two separate operations, with the firing movement being separate from the motion of bringing the tool to the firing position.

15. Provide signs and barricades when shooting into walls or floors with personnel working on the other side.

16. Never fire into easily pierced or soft substrates or into materials of unknown resistance to piercing. In these situations, there is potential for the fastener to penetrate and pass through, creating a flying projectile hazard. If penetration of these materials is required, the material should be backed with a box of wood or sand al least four inches (10 cm) thick and of adequate area.

17. Do not use powder-actuated tools in reinforced concrete if there is the possibility of striking the rebar.

18. Do not use powder-actuated tools on cast iron, high carbon, heat treated steel, or armor plate, thin slate, marble, glass, live rock, glazed brick or tile, terra cotta, or other brittle substances, or where the composition is unknown.

19. Do not fire studs closer than three inches (7.5 cm) from the edge or corner when being used on brick or concrete. Do not fire studs closer than ½ inches (1.25 cm) from the edge when being used on steel.

20. Never load and leave a powder-actuated tool unattended. It should be loaded only prior to its intended firing. Use only studs or pins specifically designed for the tool.

21. Test tools each day prior to loading by testing safety devices according to the manufacturer's recommended procedure.

22. Inspect, clean, and store powder-actuated tools in a safe place at the end of each day. No tool will be stored loaded. Store tools with the barrels removed or breech open.

23. At the manufacturer’s recommended intervals, the tool will be completely dismantled and carefully inspected for wear on the safety devices by a qualified person familiar with the tool. Worn parts will be replaced before the tool is used again. It is recommended that factory-authorized service representatives be utilized for inspection, repair, and parts replacement, where possible.

H. Chain Saws

1. Approval by the HSE manager is required for all use of chain saws.

2. Inspect the saw prior to each use and periodically during daily use.

3. Never cut above chest height.

4. Require that the idle is correctly adjusted on the chain saw. The chain should not move when the saw is in the idle mode.

5. Start cutting only after a clear escape path has been made.

6. Shut the saw off when carrying through brush or on slippery surfaces. The saw may be carried no more than 50 feet (15 meters) while idling.

7. Require applicable protective gear. This will include, but is not limited to:

    a. Logger's safety hat.

    b. Safety glasses and face shield.

    c. Steel-toed boots.

    d. Protective leggings.

    e. Hearing protection.

    f. Work gloves.

8. Inspect saws to ensure that they are fitted with an inertia break and hand guard.

9. *Never* operate a chain saw when fatigued.

10. Do not allow others in the area when chain saws are operated.

11. Make sure there are no nails, wire, or other imbedded material that can cause flying particles.

12. Do not operate a chain saw that is damaged or improperly adjusted, or is not completely and securely assembled. Always keep the teeth sharp and the chain tight. Worn chains should be replaced immediately.

13. Keep all parts of your body away from the saw chain when the engine is running.

14. For all operations, only personnel specifically trained and certified as competent by URS may operate chain saws.

I. Hand-Operated Pressure Equipment

1. Direct pressure equipment such as grease guns, and paint and garden sprayers away from the body and other personnel in the area. The person operating any equipment

such as this, which has a potential for eye injury, must wear protective goggles.

2. The noise produced when using certain types of pressure equipment may require the use of hearing protection.

3. Never allow the nozzle of a pressurized tool to come in contact with any body parts while operating. There is potential for injection of a chemical directly into the user's body, resulting in severe injury or death.

J. Gasoline-Powered Tools

1. Never pour gasoline on hot surfaces.

2. Never fuel around an open flame or while smoking.

3. Shut down the engine before fueling.

4. Provide adequate ventilation when using in enclosed spaces.

5. Use only Underwriters Laboratories (UL) - or FM-approved safety cans to transport flammable liquids. The use of unapproved containers for gasoline is strictly prohibited.

6. Label gasoline containers in compliance with Hazard Communication requirements, indicating the chemical and physical hazards of the product.

K. Inspection

Inspect all hand tools on a regular basis. Immediately remove defective tools from service, and tag or destroy them to prevent further use.

5. Documentation Summary

The following documentation will be maintained in the project file:

A. Site briefings regarding tool use.

B. Records of tools removed from service.

C. Copies of powder-actuated tool licenses (as applicable).

D. Tool inspection documentation.

6. Resources

A. U.S. Occupational Safety and Health Administration (OSHA) Standard – Hand and Portable Power Tools – 29 Code of Federal Regulations (CFR) 1910, Subpart P

B. U.S. OSHA Standard – Construction Tools – Hand and Power – 29 CFR 1926, Subpart I

C. American National Standards Institute (ANSI)/American Society of Safety Engineers (ASSE) Standard A10.3 – 2006 – Powder-Actuated Fastening Systems

D. National Association of Demolition Contractors

E. United Kingdom – 'Provision and Use of Work Equipment' Regulations 1998

F. Australia/New Zealand Standards – Powder-Actuated Handheld Fastening Tools - AS/NZS 1873.1:2003Australian/New Zealand Standards – Hand-held Motor-operated Electric Tools – AS/NZS 60745.1:2003

G. SMS 023 – Lockout and Tagout Safety

H. SMS 064 – Hand Safety

URS SAFETY MANAGEMENT STANDARD

Hazardous Waste Operations

1. Applicability

This standard applies to all operations of URS Corporation and its subsidiary companies involving the investigation or remediation of sites impacted with hazardous wastes or hazardous materials including those associated with underground storage tanks.

Normally, investigation projects for real estate transactions conducted to confirm that a site is "clean" are not covered under this standard. If the Project Manager reasonably expects that there is the potential for a “clean” site to actually have some level of contamination, it should initially be treated as contaminated and subject to this standard. Reference related URS Safety Management Standards for such operations.

2. Purpose and Scope

The purpose of this standard is to minimize the risks to URS personnel and subcontractors while conducting hazardous waste field operations.

Investigation techniques included under this standard include, but are not limited to, hand auger, soil gas evaluation, groundwater monitoring, test pits, and all types of power drilling, including direct push. Remediation techniques included under this standard include, but are not limited to, excavation, groundwater treatment, soil gas treatment, containment, and land farming.

The applicability of the HAZWOPER standard to URS activities is primarily in the areas of site investigation and remediation.

3. Procedures

The associated implementing regional procedures for this standard are included as attachments:

SMS 017 NA –	North America
SMS 017 INT –	International Operations (including Europe, Asia, South America and Africa)
SMS AP7-017 –	Australia / New Zealand

URS SAFETY MANAGEMENT STANDARD

Hazardous Waste Operations

1. Applicability

This standard applies to all operations of URS Corporation and its subsidiary companies involving the investigation or remediation of sites impacted with hazardous wastes or hazardous materials, including those associated with underground storage tanks.

Normally, investigation projects for real estate transactions conducted to confirm that a site is "clean" are not covered under this standard. If the Project Manager reasonably expects that there is the potential for a “clean” site to actually have some level of contamination, it should initially be treated as contaminated, and be subject to this standard.

2. Purpose and Scope

The purpose of this standard is to minimize the risks to URS personnel and subcontractors while conducting hazardous waste field operations.

Investigation techniques discussed in this standard include, but are not limited to, hand augering, soil gas evaluation, groundwater monitoring, test pits, and all types of power drilling, including direct-push. Remediation techniques discussed under this standard include, but are not limited to, excavation, groundwater treatment, soil gas treatment, containment, and landfarming.

The applicability of the Hazardous Waste Operations and Emergency Response (HAZWOPER) standard to URS activities is primarily in the areas of site investigation and remediation. URS relies on outside vendors or clients to provide emergency response teams (HazMat Teams) at our project sites and locations. On a project-specific basis, if the need arises for URS to provide an emergency response team, then the HAZWOPER requirements specific to that activity will be developed and incorporated into the project health and safety plan (HASP). This includes specific chemical protective clothing, equipment, and post-emergency response operations.

3. Implementation

Implementation of this standard is the responsibility of the URS Manager directing activities of the facility, site, or project location.

4. Requirements

The URS Health, Safety and Environment Management System and Safety Management Standards were designed to help employees to identify, evaluate, and control safety and health hazards and to provide for emergency response.

Site/project hazards and scope of work dictate the specifics, which are covered in Facility Emergency Action Plans and Project HASPs.

A. Project Evaluation

Assess the technical and field aspects of every hazardous waste site project to evaluate:

1. Risk of exposure to hazardous chemicals, with particular attention to suspected or known human carcinogens.
2. Personal protective equipment requirements.
3. Air monitoring requirements.
4. Emergency services requirements.
5. Hazards addressed by other URS Safety Management Standards (e.g., SMS 010 – Confined Space Entry).
6. Hazardous materials shipping and disposal responsibilities.
7. Other safety and health hazards associated with site operations.

B. Client/Contract Evaluation

1. Review contract documents to determine whether the client has any special internal or regulatory requirements for hazardous waste site operations.
2. Implement client requirements in addition to those of this standard. Those requirements that are the most protective (e.g., most stringent) will be used.

C. Site-Specific Health and Safety Plan

1. Prepare a site-specific HASP for every project under this standard.
2. HASPs must be written or approved by the appropriate Health, Safety, and Environment (HSE) Manager, or a safety professional specifically approved by the HSE Manager, and by the project manager. Modifications and addendums to the HASP require approval by the HSE Manager and project manager.

3. Evaluate client and agency requirements prior to preparing the HASP, particularly if the client or an agency will approve the HASP prior to implementation.

4. On a site-/project-specific basis, conduct a hazard assessment and identify appropriate engineering controls, work practices, and personal protective equipment (PPE) requirements. This assessment and the mitigations and controls must be documented in site-/project-specific HASP(s) and Job Safety Analysis (or equivalent).

5. On a site-/project-specific basis, conduct a hazard assessment for potential physical and chemical exposures and identify monitoring equipment, frequency, action levels, and actions. These must be incorporated into project-/site-specific HASP(s). Guidance on monitoring is provided in SMS 043 – Personal Monitoring/Industrial Hygiene.

6. On a site-/project-specific basis and based on the potential chemical exposures and work activities, develop specific decontamination procedures that include instructions on materials, decontamination steps, and location of decontamination. The purpose of these procedures will be to ensure personnel leaving contaminated areas are appropriately decontaminated, and all equipment is disposed or decontaminated.

7. PPE selection, use, and maintenance are presented in SMS 029 – Personal Protective Equipment. This information is documented on a site/project specific basis in the site/project HASP. The HASP may include PPE requirements that vary by task and project conditions. The Site Safety Officer (SSO) will implement these PPE changes included in the HASP, but may not modify the HASP PPE requirements. Work may not proceed unless the PPE required by the HASP is available and properly used.

   The HASP shall include the following minimum PPE: hard hat, safety glasses, high visibility vest, and safety-toe shoes/boots.

8. Remove any non-impermeable PPE clothing that becomes contaminated with hazardous substances in accordance with the decontamination procedures noted above.

9. Provide regular showers, change rooms, and sanitation facilities for employees, as necessary. Unauthorized personnel shall not remove protective clothing or equipment from change rooms.

D. Training – Remediation and Investigation Activities

Verify that each assigned URS employee has completed the following required training.

1. 40-hour initial training from an approved training provider, (24 hours of initial training for operations outside of North America).

2. 3 days of on-the-job training (1 day is required for operations outside of North America).

3. 8-hour refresher training completed within 12 months of the initial or subsequent refresher training. If the time lapse since the 40 hour training or 8 hour refresher (whichever is later) is greater than two years, contact a Division, Regional, or Business Unit HSE Manager or Director. The HSE Manager/Director may require additional training (e.g., on-line modules) including the 40 hour class to be re-taken.

4. 8-hour Site Safety Officer (Supervisor) training for directing the activities of any other URS employee or subcontractor.

5. Additional training for the Site Safety Officer as described below.

E. Training – Emergency Response

The HAZWOPER standard is primarily applicable to URS operations involving remediation and investigations at hazardous waste sites or sampling at Treatment, Storage, and/or Disposal Facilities (TSDFs). URS typically contracts emergency response or relies on client or local emergency response teams. On an as-needed basis, if a project requires URS to provide a HAZMAT emergency response team, the following training requirements must be met.

1. Operations Level – a minimum of 8 hours of initial and refresher training for those responsible for acting defensively in the case of a release, attempting to contain the release from a safe distance.

2. HAZMAT Technician – at least 24 hours of initial training and 8 hours of refresher training. They will participate in operations-level

training and know how to implement the emergency response plan for the facility/site/project location.

3. HAZMAT Specialist – at least 24 hours of initial training and 8 hours of refresher training. They will be trained in the same content as the HAZMAT Technician, as well as in how to develop a site safety and control plan.

4. Incident Commander – will have at least 40 hours of training covering the Operations Level training and techniques for implementing the emergency response plan and directing the incident. They will be knowledgeable in relevant regulations.

F. Site Safety Officer

1. Appoint a Site Safety Officer (SSO) with appropriate qualifications for the specific hazardous waste project.

2. Assure that the SSO for complex projects, such as those with complicated remediation activities, has no duties other than site safety and health.

3. Verify that the SSO has completed basic supervisor training, and has additional required training and experience as applicable:

   a. Additional respiratory protection training is required for projects where supplied air respirators may be used.
   b. Heavy equipment/construction safety.
   c. Personal air monitoring.

4. The SSO will monitor decontamination and other site activities for effectiveness.

G. Exposure Monitoring

Require that exposure monitoring is conducted in accordance with the HASP on all hazardous waste projects.

H. Project Equipment

1. Provide all health and safety equipment as described by the project HASP.

2. Provide all personal protective equipment as described by the project HASP.

I. Medical Surveillance

Verify that each URS employee assigned to the project meets the minimum requirements of the URS Medical Surveillance Program (refer to SMS 024 – Medical Screening and Surveillance). This typically includes:

1. Baseline examination
2. Annual examination
3. Appropriate clearance for respirator use.

J. Compliance Assurance

SMS 068 – Compliance Assurance is a tool for use in determining the effectiveness and compliance of a hazardous waste site operation.

5. Documentation Summary

The following information will be maintained in the project file:

A. Completed Health and Safety Plan

B. Completed and signed HASP approval form

C. Signed HASP acceptance form (or equivalent)

D. Completed health and safety field forms that are included in each HASP

E. Training and Medical Surveillance Clearance documentation for project personnel

6. Resources

A. U.S. Occupational Safety and Health Administration (OSHA) – Hazardous Waste Operations

B. European Agency for Safety and Health at Work, Dangerous Substances http://europe.osha.eu.int/good_practice/risks/dangerous_substances/

C. Occupational Safety and Health Guidance Manual for Hazardous Waste Site Activities – National Institute for Occupational Safety and Health (NIOSH) 85-115

D. SMS 010 – Confined Space Entry

E. SMS 024 – Medical Screening & Surveillance

F. SMS 043 – Personal Monitoring

G. SMS 029 – Personal Protective Equipment

H. SMS 068 – Compliance Assurance

URS SAFETY MANAGEMENT STANDARD

Heat Stress

1. Applicability

This standard applies to URS field projects where ambient (not adjusted) temperatures exceed 70 °F (21 °C) for personnel wearing chemical protective clothing, including Tyvek™ coveralls, and 90 °F (32 °C) for personnel wearing normal work clothes.

2. Purpose and Scope

The purpose of this standard is to protect project personnel from the effects of heat related illnesses.

3. Procedures

The associated implementing regional procedures for this standard are included as attachments:

SMS 018 NA – North America; Australia / New Zealand

SMS 018 INT – International Operations (including Europe, Asia, South America and Africa)

URS SAFETY MANAGEMENT STANDARD

Heat Stress

1. Applicability

This standard applies to URS Corporation and its subsidiary companies on projects where ambient (not adjusted) temperatures exceed 70 degrees Fahrenheit (^{o}F) (21 degrees Celsius [^{o}C]) for personnel wearing chemical-protective clothing, including impermeable protective clothing such as Tyvek or Saranex coveralls, and 90°F (32°C) for personnel wearing standard permeable work clothes. Permeable clothing refers to clothes of standard cotton or synthetic materials. Note that certain governmental entities require heat stress prevention techniques be implemented at lower temperatures or whenever outdoor work is conducted. Always consult local regulations to determine if more stringent standards apply.

2. Purpose and Scope

The purpose of this standard is to protect project personnel from the effects of heat-related illnesses.

3. Implementation

Implementation of this standard is the responsibility of the URS manager directing activities of the facility, site, or project location.

4. Requirements

A. The project Health and Safety Plan will address heat stress control when temperatures identified in Section 1 of this standard are anticipated.

   This standard introduces three different means of monitoring for heat stress conditions: Wet Bulb Globe Temperature (WBGT), Humidex Based Heat Response and Physiological Monitoring. These methods can be used separately or in conjunction. For employees wearing chemical-protective clothing, physiological monitoring (Section D) is the most effective approach, because evaporative cooling capability is limited.

B. Heat stress is influenced by air temperature, radiant heat, and humidity. The WBGT is a useful index of the environmental contribution to heat stress. Because WBGT is only an index of the environment, the contributions of work demands, clothing, and state of acclimatization must also be accounted for, as described in the following steps.

   1. Monitor ambient temperatures and conduct heat stress monitoring in accordance with the project Health and Safety Plan. Revise the heat

stress monitoring and controls if there are any reports of discomfort due to heat stress.

2. Monitor temperatures in each unique environment in which workers perform work (e.g., take WBGT measurements inside truck cabs for truck drivers, and take separate WBGT measurements in the outdoor area where field employees work, etc.). Follow manufacturer's instructions on proper use of the WBGT.

3. Determine if individual workers are acclimatized or un-acclimatized. Full heat acclimatization requires up to 3 weeks of continued physical activity under heat-stress conditions similar to those anticipated for the work. Its loss begins when the activity under those heat-stress conditions is discontinued, or when there is a sustained increase in temperatures of 10 °F (5.6 °C) or more, and a noticeable loss occurs after 4 days. A worker can be considered acclimatized for the purpose of this procedure when they have been exposed to the site conditions (including level of activity) for 5 of the last 7 days.

4. Determine the approximate workload of each worker or group of workers. The following examples can be used for comparison:

Table 1
Examples of Activities within Workload Categories

Categories	Example Activities
Resting	Sitting quietly
	Sitting with moderate arm movements
Light	Sitting with moderate arm and leg movements
	Standing with light work at machine or bench while using mostly arms
	Using a table saw
	Standing with light or moderate work at machine or bench and some walking about
Moderate	Scrubbing in a standing position
	Walking about with moderate lifting or pushing
	Walking on level at 6 Km/hr while carrying 3 Kg weight load
Heavy	Carpenter sawing by hand
	Shoveling dry sand
	Heavy assembly work on a non-continuous basis
	Intermittent heavy lifting with pushing or pulling (e.g., pick-and-shovel work)
Very Heavy	Shoveling wet sand

5. Determine the approximate proportion of work within an hour during a typical shift. Typically, the initial work schedule will be 60 minutes of work

per hour (100 percent work) with a small break in the morning and afternoon, as appropriate, and a 30-minute lunch break mid-day.

6. Compare the WBGT values measured in 4.B.1 to the screening criteria values in the following table, using the determinations made in 4.B.3 through 4.B.5.

Table 2
SCREENING CRITERIA FOR HEAT STRESS EXPOSURE
(WBGT Values in ºF /ºC)

Work Cycle (60 min/ hour)	Acclimatized				Unacclimatized			
	Light Work	Mod. Work	Heavy Work	Very Heavy Work	Light Work	Mod. Work	Heavy Work	Very Heavy Work
100% Work	85.1/ 29.5	81.5/ 27.5	78.8/ 26.0	N/A	81.5/ 27.5	77.0/ 25.0	72.5/ 22.5	N/A
75% Work 25% Rest	86.9/ 30.5	83.3/ 28.5	81.5/ 27.5	N/A	84.2/ 29	79.7/ 26.5	76.1/ 24.5	N/A
50% Work 50% Rest	88.7/ 31.5	85.1/ 29.5	83.3/ 28.5	81.5/ 27.5	86/ 30	82.4/ 28	79.7/ 26.5	77/25
25% Work 75% Rest	90.5/ 32.5	87.8/ 31	86/ 30	85.1/ 29.5	87.8/ 31	84.2/ 29	82.4/ 28	79.7/ 26.5

a. If the measured WBGT is *less than* the table value, there is little risk of excessive exposure to heat stress, and work can continue. Continue to monitor ambient conditions with the WBGT. However, if there are reports of the symptoms of heat-related disorders, then the analysis of little risk should be reconsidered.

b. If the measured WBGT is *greater than* the table value, institute heat stress controls, including a work-rest cycle, and perform physiological monitoring as described in section D of this standard.

c. Because of the physiological strain associated with very heavy work among less fit workers regardless of WBGT, values are not provided in Table 1 for continuous work. Physiological monitoring should always be implemented under these conditions.

d. For workers wearing cloth coveralls (e.g., Nomex fire resistant clothing), add 3.5 to the measured WBGT. For impermeable clothing, such as Tyvek or Saranex, the WBGT procedures cannot be used. For these situations, workers should begin physiological monitoring as soon as the temperature in the work area exceeds 70ºF (21°C).

C. Humidex Based Heat Response

1. The Humidex method is a simplified way of protecting workers from heat stress which is based on the WBGT to estimate heat strain. It is an equivalent scale intended to express the combined effects of warm temperatures and humidity. Humidex is used as a measure of perceived heat that results from the combined effect of excessive humidity and high temperature.

2. This method requires only a local air temperature and relative humidity value. Monitoring must continue throughout the day for changing conditions. Identify a representative location where measurements can be taken. Measurements should be recorded at least hourly when ambient temperatures and 90°F (32°C) for personnel wearing normal permeable work clothes.

3. Specific procedures to complete the Humidex Based Heat Response Plan are included in Attachment 018-1 NA – Humidex Worksheet.

D. Physiological Monitoring

Physiological monitoring provides a means to assess the effectiveness of the heat stress controls (training, hydration, work-rest cycles, etc.) that are in place. Based on the results of physiological monitoring and self-assessment, work-rest cycles can be adjusted to more effectively control heat stress by shortening the work period, or to allow for longer work periods if workers are recovering adequately during rest breaks.

1. Perform physiological monitoring as soon as the employee stops working and begins their break (rest). Perform *physiological monitoring at least every hour. Base rest breaks* on the results of the monitoring, workers' self-assessment, and professional judgment.

   a. Example 1: If the WBGT is 85°F (29.4°C) or less for acclimatized, light-duty workers, they can work 60 minutes per hour (100 percent work), and they need only take their regularly scheduled breaks.

   b. Example 2: If the WBGT is greater than 85°F (29.4°C) for acclimatized, light-duty workers, physiological monitoring must be performed, and workers' work-rest cycles must be adjusted as described below.

2. Have workers assess themselves and their body's reaction to the heat and work conditions (self-assessment), and report any signs or symptoms of

heat illness. These can include nausea or dizziness, heat cramps, extreme thirst, or very dark urine.

3. Based on the results of the physiological monitoring and on the workers' self-assessments, the work period may be adjusted as follows:

   a. The work period may be *increased* (generally, by 5- to 10-minutes intervals, up to a maximum of 4 hours) if the results of the first 2 hours of the physiological monitoring and the workers' self-assessments indicate that workers *are* recovering adequately (see below), and on the judgment of the Health and Safety Technician.

   b. The work period *must be decreased* if the results of the physiological monitoring and the workers' self-assessment indicate that workers are NOT recovering adequately (see below).

4. Perform physiological monitoring

   a. The worker or the Health and Safety Technician must measure and record body temperature and pulse rate as described below. Use SMS 018-2 NA – Heat Stress Monitoring Record as a tool.

5. Body Temperature Monitoring

   a. Monitor body temperature to determine if employees are adequately dissipating heat buildup. Ear probe thermometers which are adjusted to oral temperature (aural temperature) are convenient and the preferred method of measurement. Determine work/rest regimen as follows:

      i. Measure oral body temperature at the end of the work period. Oral body temperatures are to be obtained prior to the employee drinking water or other fluids.

      ii. If temperature exceeds 99.6^{o}F (37.5^{o}C), shorten the following work period by 1/3 without changing the rest period.

      iii. If, at the next rest period, temperature still exceeds 99.6^{o}F (37.5^{o}C), the worker should not be allowed to continue work until repeated temperature measurements are in the acceptable range (i.e., less than 99.6^{o}F). Do not leave the worker alone during the recovery time. Watch for signs of heat illness and be prepared to implement emergency response as necessary.

iv. Do not allow a worker to wear impermeable PPE when his/her oral temperature exceeds 100.6^{o}F (38.1^{o}C).

b. Have employees assess themselves and their body's reaction to the heat and work conditions, and report any signs or symptoms of heat stress, including, but not limited to, feeling nauseous or dizzy, skin rash or skin irritation, muscle cramps, weakness or fatigue, extreme thirst, dizziness, blurred vision, headache, or very dark urine.

6. Pulse Rate Monitoring

a. Take the radial (wrist) pulse as early as possible in the rest period and determine the worker's heart rate in beats per minute. The heart rate is determined by counting the pulse for ten seconds and multiplying the number by 6 to get the beats per minute. Record this as P1.

b. Wait 2 minutes and repeat the pulse measurement. Record this as P2.

c. If P1 is greater than or equal to 110 beats per minute (bpm) and if (P1 – P2) is less than or equal to 10 bpm (indicating that workers are not recovering adequately), shorten the next work cycle by 1/3 without changing the rest period.

d. At the next rest period, if P1 is still equal to or greater than 110 bpm, and if (P1 – P2) is still less than or equal to 10 bpm, shorten the following work cycle by 1/3 without changing the rest period.

e. At the third rest period, if P1 is still equal to or greater than 110 bpm and (P1 – P2) is still less than or equal to 10 bpm, the worker should not be allowed to continue work until repeated pulse measurements are in the acceptable range (i.e., P1 is less than 110 bpm and (P1 – P2) is greater than 10 bpm). Do not leave the worker alone during the recovery time. Watch for signs of heat illness and be prepared to implement emergency response as necessary.

E. Record monitoring results and worker's self-assessments on Attachment 018-2 NA – Heat Stress Monitoring Record.

F. Investigate the use of auxiliary cooling devices in extreme heat conditions.

G. Conduct briefings for employees regarding health hazards and control measures associated with heat stress whenever conditions require the implementation of heat stress monitoring. Supervisors should receive training in heat related illness prevention prior to supervising employees in areas

where heat stress could occur. The training should include emergency response information provided in Supplemental Information A.

H. Provide cool water and electrolyte replacement drinks as described in Supplemental Information A.

I. Allow employees who are not accustomed to working in hot environments appropriate time for acclimatization, as described in Supplemental Information A.

J. Provide break areas as described in Supplemental Information A.

5. Documentation Summary

The following information will be maintained in the project file:

A. Heat Stress Monitoring Records

B. Employee Safety Briefing Verification Forms

6. Resources

A. NIOSH – Working in Hot Environments (Publication No. 86-112), 1986

B. NIOSH – Criteria for a Recommended Standard for Occupational Exposures to Hot Environments (Publication No. 86-113), 1986

C. ACGIH – Documentation of the Threshold Limit Values and Biological Indices, 2003

D. AFL-CIO Building Trades Division – Heat Stress in Construction

E. Occupational Health Clinics for Ontario Worker, Inc. – Humidex Based Heat Response Plan

F. Attachment 018-1 NA – Humidex Worksheet

G. Attachment 018-2 NA – Heat Stress Monitoring Record

7. Supplemental Information

A. Heat Stress Informational Supplement

URS	Health, Safety and Environment **HUMIDEX WORKSHEET**	Attachment 018-1 NA Issue Date: May 2001 Revision 8: September 2012

Step 1: On the Humidex table below, look up the temperature on the left (Celsius is located below RH>) and the relative humidity (RH) on the top. Determine the Humidex value.

F	RH>	100%	95%	90%	85%	80%	75%	70%	65%	60%	55%	50%	45%	40%	35%	30%	25%	20%
108	42													55	52	50	48	46
106	41												55	53	51	48	46	44
104	40											55	53	51	49	47	45	43
102	39										55	53	51	49	47	45	43	41
100	38		Step 1 - Determine HUMIDEX VALUE							54	53	51	49	47	45	43	42	40
99	37								54	52	51	49	47	45	44	42	40	38
97	36					57	55	53	52	50	49	47	45	44	42	40	39	37
95	35				56	54	53	51	50	48	47	45	43	42	40	39	37	36
93	34		56	55	53	52	51	49	48	46	45	43	42	40	39	37	36	34
91	33	55	54	53	51	50	48	47	46	44	43	41	40	39	37	36	34	33
90	32	53	51	50	49	48	46	45	44	42	41	40	38	37	36	34	33	32
88	31	50	49	48	47	45	44	43	42	40	39	38	37	35	34	33	32	30
86	30	48	47	46	44	43	42	41	40	39	37	36	35	34	33	31	30	29
84	29	46	45	43	42	41	40	39	38	37	36	35	33	32	31	30	29	28
82	28	43	42	41	40	39	38	37	36	35	34	33	32	31	30	29	28	27
81	27	41	40	39	38	37	36	35	34	33	32	31	30	29	28	27	26	25
79	26	39	38	37	36	35	34	33	33	32	31	30	29	28	27	26	25	24
77	25	37	36	35	34	33	33	32	31	30	29	28	27	26	26	25	24	23

Step 2: Place the Humidex value into the Heat Index Adjustment Table below. Determine the applicable adjustments based on the given work or task.

Heat Index Adjustment Table

	Step 2 - Risk Factor Adjustment	
Write in value	What is the HUMIDEX value from the table in Step 1?	
	Radiant Heat	**Adjustment**
	Working in full-sun	Add 2
	Working in ½ or partial sun or weak radiant heat source	Add 1
	Working near very hot equipment surfaces or processes	Add 2
	Clothing: Pick One Only	
	Short/long sleeve shirt and pants – no overalls	None
	Overalls (e.g., Nomex suit)	Add 3
	Double layer overalls	Add 5
Stop	Impermeable clothing	Perform Physiological Monitoring
	Acclimatization	
	Have been working at least 5 of last 7 days in heat stress conditions.	Subtract 4
	Work Load & Miscellaneous Factors	
	Light Work (Standing, slow walking)	Subtract 2
	Medium Work (Walking about with moderate lifting or pushing)	None
	Heavy Work (Shoveling dry sand, carrying 50 lbs)	Add 2
	Very Heavy Work (Shoveling wet sand)	Add 3
	TOTAL – Compare to Heat Index Response Plan	

Step 3: Compare adjusted Heat Index Total to the Heat Index Response Plan table to obtain guidance for work/rest.

Heat Index Response Plan*

TOTAL NUMBER	Final Step 3 - HEAT INDEX Response
30-33	alert & information & water
34-37	warning & increase water
38-39	75% work - 25% rest & monitor for signs of heat stress
40-41	50% work - 50% rest & monitor for signs of heat stress
42-44	25% work - 75% rest & monitor for signs of heat stress
45+	Perform Physiological Monitoring

* Percent work and rest/recovery are on a per hour basis. Adjustments and subsequent work/rest cycle recommendations are rough guidelines only. No heat stress prediction scheme can replace monitoring of symptoms or a health care practitioners advice in the case of individuals with special medical conditions or predisposing circumstances for heat related illness. Always pay attention to the way workers are feeling. Recuperate if fatigued, nauseated, dizzy or thirsty.

URS	Health, Safety and Environment **HEAT STRESS MONITORING RECORD**	Attachment 018-2 NA Issue Date: May 2001 Revision 8: September 2012

Date: _____ Safety Representative: _____

Worker's Name: _____ Subcontractor: _____

Work Activity/Equipment: _____

Time	Work-Rest Cycle	Aural Temp (ºF/°C)	Pulse (BPM)			Comments
			P_1	P_2	P_1-P_2	

HEAT RASH

Heat rash (prickly heat) may result from continuous exposure to heat or humid air. It appears as red papules (elevated skin lesion), usually in areas where the clothing is restrictive, and gives rise to a prickly sensation, particularly as sweating increases. It occurs in skin that is persistently wetted by un-evaporated sweat. The papules may become infected unless treated.

First Aid for Heat Rash - To prevent heat rash, shower after work, dry off thoroughly, and put on clean, dry underwear and clothes. Try to stay in a cool place after work. If, in spite of this, you develop heat rash, see your physician.

HEAT CRAMPS

Heavy sweating with inadequate electrolyte replacement causes heat cramps. Signs and symptoms include:

- Muscle spasms.
- Pain in the hands, feet and abdomen.

First Aid for Heat Cramps - Leave the work area, and rest in a cool, shaded place.

Mild heat cramps can be treated by drinking beverages that contain salt or eating salty food. Severe heat cramps are treated with fluids and salts given intravenously.

Once the spasms disappear, you may return to work. Taking adequate breaks and drinking electrolyte replacement drink should prevent the cramps from returning.

HEAT EXHAUSTION

Heat exhaustion occurs from increased stress on various body organs including inadequate blood circulation due to cardiovascular insufficiency or dehydration. Signs and symptoms include:

- Pale, cool, moist skin.
- Heavy sweating.
- Dizziness.
- Nausea.
- Fainting.
- Headache.
- Blurred vision.
- Vomiting.

The key here is that the victim is still sweating, so the cooling system is still working; it's just under severe stress. The body core temperature may be elevated, but not higher than 104ºF (40ºC). It is important to recognize and treat these symptoms as soon as possible, as the transition from heat exhaustion to the very hazardous heat stroke can be quite rapid.

First Aid for Heat Exhaustion – Treatment involves replacing fluids (rehydration) and salts and removing the person from the hot environment. If symptoms are mild, sipping cool, slightly salty beverages every few minutes may be all that is needed. Removing or loosening clothing and applying wet cloths or ice packs to the skin also aid cooling.

HEAT STROKE

Heat stroke is the most serious form of heat stress. Temperature regulation fails and the body temperature rises to critical levels, typically at or above 104ºF (40ºC). Immediate action must be taken to cool the body before serious injury and death occurs. Competent medical help must be obtained. Signs and symptoms are:

- Red, hot, usually dry skin.
- Lack of or reduced perspiration (lack of perspiration may be masked for those wearing chemical protective clothing since perspiration from earlier in the day will be present).
- Nausea.
- Vomiting.
- Dizziness and confusion.
- Strong, rapid pulse.
- Coma.

First Aid for Heat Stroke - THIS IS A MEDICAL EMERGENCY! SUMMON MEDICAL ASSISTANCE IMMEDIATELY!

While awaiting transportation to the hospital, a person should be wrapped in cold, wet bedding or clothing; immersed in a lake, stream, or cool bathtub; or cooled with ice. At the hospital, body cooling is usually accomplished by removing the clothes and covering the exposed skin with water or ice. To speed evaporation and body cooling, a fan may be used to blow air on the body. Body temperature is measured frequently, often constantly. To avoid overcooling, cooling is stopped when the body temperature is reduced to about 102°F (38ºC).

HEAT STRESS PREVENTION

The best approach to avoiding heat-related illness is through preventative heat stress management.

Rest areas - A relatively cool, shaded area must be provided for breaks when ambient temperatures exceed 70°F (21°C) and workers are wearing chemical protective clothing (including uncoated Tyvek), or if temperatures exceed 80°F (26°C) and workers are wearing "Level D" coveralls or work clothes. For hazardous waste sites, the rest area should be located in the support zone adjacent to the contamination reduction zone, situated so that part of it is in the decon area so workers can take breaks without going through full decon. If shade is not available, shaded areas shall be constructed. This same type of canopy can be set up to shade personnel performing various types of work in hot weather. Cooling measures other than shade (e.g., misting, air conditioned break areas, air conditioned

vehicles, etc.) can be used in lieu of shade provided it can be demonstrated that they are at least as effective in cooling employees. Employees should have access to these rest areas at break times and at any other time when suffering from heat illness or believing a preventive recovery period is needed.

Liquids - Encourage employees to drink plenty of cool plain water and electrolyte replacement drinks. Supplementing water with cool electrolyte replacement drinks, such as Gatorade, Squench or Quik-kick (drink), is helpful to employees who tend to sweat a lot. Do not use "community cups"; use paper cups. Employees should have access to potable drinking water equivalent to one quart of water per employee per hour during the shift. Less water can be available at the start of the shift provided it is effectively replaced when required.

Have workers drink 16 ounces (0.5 liters) of drink before beginning work, such as in the morning and after lunch. At each break, workers should drink 8 to 16 ounces (0.25 to 0.5 liters). Employees should not wait until they are thirsty to drink.

Discourage the use of alcohol during non-working hours, and discourage the intake of coffee during work hours, as these make heat stress control more difficult.

Acclimatization - This is the process by which your body "gets used to" hot work environments. This is achieved by slowly increasing workloads. Start at 50 percent capacity on day one, and increase by 10 percent per day; on day six, you'll be at 100 percent. You don't lose acclimatization over a weekend, but it'll start to decrease after three to four days. If you don't do hot work for a week, the acclimatization is gone. You don't have to do full shift hot work to achieve or retain acclimatization; a minimum of 100 minutes of continuous hot work exposure per day is adequate.

Auxiliary Cooling - Auxiliary cooling is usually obtained by providing workers with a specially-designed vest, which is worn under the protective clothing, but over any underclothing. These vests typically provide cooling via one of two methods: the use of ice or other frozen media, or the use of a vortex cooler. Each method has its advantages and disadvantages.

The frozen media vest requires a means for freezing the media, and the media (usually water or "blue ice") will melt, requiring replacement.

The vortex cooler tends to cool more uniformly. Instead of frozen media, this vest uses the expansion of compressed air to cool the wearer. The drawback is the compressed air requirement, but this is negated when the wearer is already using an airline respirator supplied by a compressor. A vortex cooler should not be supplied from air cylinders, as this will draw down the cylinders rapidly.

Auxiliary cooling should be considered when the following conditions exist:

- Ambient temperature over 80°F (26°C).
- Workers are wearing impermeable garments (i.e., Tyvek, Saranex, Chemrel, etc.).
- It is desirable to have long work shifts with minimum interruption.

URS SAFETY MANAGEMENT STANDARD

Heavy Equipment Operations

1. Applicability

This standard applies to the operations of URS Corporation and its subsidiary companies where heavy equipment is in operation.

2. Purpose and Scope

The purpose of this standard is to require that heavy equipment is operated in a safe manner, the equipment is properly maintained, and ground personnel are protected.

3. Procedures

The associated implementing regional procedures for this standard are included as attachments:

SMS 019 NA – North America; Australia / New Zealand

SMS 019 INT – International Operations (including Europe, Asia, South America and Africa)

URS SAFETY MANAGEMENT STANDARD

Heavy Equipment Operations

1. Applicability

This standard applies to the operations of URS Corporation and its subsidiary companies where heavy equipment is in operation by URS employees or subcontractors.

2. Purpose and Scope

The purpose of this standard is to require that heavy equipment is operated in a safe manner; that the equipment is properly maintained; and that ground personnel are protected. Heavy equipment includes construction and mining equipment such as backhoes, excavators, skid steers, graders, loaders, dozers, tractors, cranes, drills, and draglines.

In addition to this standard, refer to SMS 038 – Cranes and Derricks; and SMS 056 – Drilling Safety.

Military related vehicles and equipment (e.g., tanks) are not covered under this standard.

3. Implementation

Implementation of this standard is the responsibility of the URS manager directing activities of the facility, site, or project location.

4. Requirements

A. Authorized Operators

1. Evaluate operators through documented experience (resume), and as appropriate, a practical evaluation of skills. Supplemental Information A through G, or a similar method, may be used for evaluating operators.

2. Allow only qualified operators to operate equipment. Trainees may operate equipment under the direct supervision of a trainer.

3. Prohibit equipment from being operated by any personnel who have not been specifically authorized to operate it.

4. Maintain a list of operators for the project, and the specific equipment that they are authorized to operate.

5. Require operators to use seatbelts at all times in all equipment and trucks.

6. Except where allowed by the manufacturer, prohibit personnel other than the operator from riding in or on the equipment unless additional seating (with seatbelts) is provided by the manufacturer. In some cases, a trainer may ride in a cab not equipped with additional seating when training activities are being conducted.

7. Operators must maintain three points of contact whenever mounting and dismounting a piece of equipment.

8. Brief operators on the following rules of operation:

    a. Operators are in control of their work area.

    b. Equipment must be operated in a safe manner and within the constraints of the manufacturer's Operation Manual.

    c. Operators must stop work whenever unauthorized ground personnel or equipment enter their work area, and only resume work when the area has been cleared.

    d. Operators must not use mobile phones while operating heavy equipment.

B. Ground Personnel

1. Require that URS ground personnel or ground personnel interacting with URS heavy equipment operations have received training, and comply with the following rules of engagement:

    a. Wear high-visibility protective vests when in work areas with any operating equipment.

    b. Stay outside of the swing zone or work area of any operating equipment.

    c. No standing or working in the equipment operator’s blind spots.

    d. Ground personnel may only enter the swing or work area of any operating equipment when:

1. They have attracted the operator's attention and made eye contact.

2. The operator has idled the equipment down, placed it in neutral, grounded engaging tools, and set brakes.

3. The operator gives the ground personnel permission to approach.

e. Ground personnel must never walk, or position themselves between, any fixed object (e.g., working face, highwall) and operating equipment, or between two operating pieces of equipment.

C. Equipment

1. Maintain operation manuals at the site for each piece of equipment that is present on the site and in use.

2. Require that operators have read or been trained on the manual for the equipment, and operate the equipment within the parameters of the manual and this standard.

3. Require that all equipment is provided with roll-over protection systems (ROPS). Tracked excavators, road trucks, and drills are exempt from ROPS requirements, but must have a cab that provides protection from overhead hazards.

4. Verify that seatbelts are present and functional in all equipment.

5. Prohibit the use of equipment that has or had cab glass (per the manufacturer’s specifications) that is cracked, broken, or missing.

6. Require that backup alarms are functional on all trucks and equipment. Tracked excavators must have bi-directional alarms, or the operator must be provided with a spotter whenever tracking in either direction.

7. Require all extensions such as buckets, blades, forks, etc., to be grounded when not in use.

8. Require brakes to be set and wheels chocked or equivalent (when applicable) when not in use.

9. Require fire extinguishers to be placed on all vehicles or equipment as required, and inspected by the operator prior to each shift. Monthly inspection and service records will be maintained in the project office, if not kept on the extinguishing equipment.

10. Require that all haulage vehicles, whose payload is loaded by means of cranes, power shovels, loaders, or similar equipment, has a cable shield and/or canopy adequate to protect the operator from shifting or falling material. If protection is not available for the operator, the operator must leave the vehicle and wait in a designated safe location until it is loaded.

11. Require that a locking device be provided that will prevent the accidental separation of towed and towing vehicles on every fifth-wheel mechanism and two-bar arrangement.

12. Require that trip handles for tailgates of dump trucks and heavy equipment be arranged so that when dumping, the operator will be in the clear.

13. Require that motors and engines are shut off during fueling or maintenance operations. Ensure proper grounding/bonding between equipment and fuel vehicle prior to fueling operations. During fueling operations, ensure the fuel nozzle remains in contact with the tank and no smoking or open flame is present in the immediate area.

D. Subcontractor Equipment

1. Require that no unsafe vehicles or equipment be allowed in construction areas. Where compliance is refused, the project manager or his or her designate should be notified immediately.

2. Require that subcontractor employees follow established safety procedures in operation, inspection, and maintenance of vehicles and equipment.

3. Require that URS supervisors visually observe the subcontractors' vehicles and equipment, and report any unsafe conditions or practices to the project manager. Equipment not in compliance with applicable safety standards is prohibited.

E. Safe Operation

1. All vehicles transporting material or equipment on public roads must comply with local laws pertaining to weight, height, length, and width. Obtain any permits required for these loads.

2. Prohibit operating Company-owned, leased, or rented vehicles or equipment while under the influence of alcohol or illegal drugs.

3. Require seatbelts to be worn for all operators, drivers, and passengers for company owned or leased vehicles and equipment.

4. Do not drive equipment into an unsafe area. This includes areas of construction where unnecessary tire, steering, or body damage could result, or where soil conditions are not adequate to support the equipment.

5. Do not smoke on, in, or within 50 feet (15 meters) of vehicles hauling fuel oils, gasoline, or explosives.

6. Do not ride with arms or legs outside of the truck body, in a standing position on the body, on running boards, or seated on side fenders, cabs, cab shields, rear of truck bed, or on the load.

7. Do not drive any vehicle at a speed greater than is reasonable and proper, with due regard for weather, traffic, intersections, width, and character of the roadway, type of motor vehicles, and any other existing condition.

8. Oilers, apprentices, and other operators will not be allowed to operate equipment unless authorized by the project manager or general superintendent.

9. Do not operate any equipment beyond its safe load or operational limits.

10. Keep all employees clear of loads about to be lifted, or suspended loads.

11. Outfit equipment operated in hazardous atmosphere environments with the proper safety equipment (e.g., spark arrestors).

12. Utilize equipment with enclosed cabs where feasible or accessible. Where use of equipment with enclosed cabs is not feasible or said

equipment is not accessible, require that operators use eye protection in accordance with potential airborne hazards present.

F. Inspection and Maintenance

1. Require operators to inspect equipment daily (or before each shift), using Attachment 019-1 NA or equivalent.

2. Prohibit use of equipment deemed to be unsafe, as determined by daily inspection, until required repairs or maintenance has been completed.

3. Conduct maintenance as prescribed by the manufacturer in the Operation Manuals for each piece of equipment.

4. During maintenance and repair, require that:

   a. Motors are turned off, unless required for performing maintenance or repair.

   b. All ground-engaging tools are grounded or securely blocked.

   c. Controls are set in a neutral position.

   d. Brakes are set.

   e. Electrically driven equipment is installed with provision for tagging and locking out the controls while under repair.

   f. Manufacturer's requirements for maintenance and repair are followed.

5. Provide and use a safety tire rack, cage, or equivalent protection when inflating, mounting, or dismounting tires installed on split rims, or rims equipped with locking rings or similar devices.

6. Maintenance records for any service, repair or modification which affects the safe performance of the equipment must be maintained and reasonably available to operator and maintenance personnel.

5. Documentation Summary

The following information will be maintained in the project file:

A. Operator qualifications.

B. Daily Equipment Inspection Logs, Attachment 019-1 NA, or equivalent.

C. Site briefing documentation for operator rules and ground personnel "rules of engagement".

6. Resources

A. U.S. Occupational Safety and Health Administration (OSHA) Standard – Motorized Vehicles and Mechanized Equipment – 29 Code of Federal Regulations (CFR) 1926, Subpart O

B. U.S. Mine Safety and Health Administration – 30 CFR 48 – Training and Retraining Miners

C. U.S. Mine Safety and Health Administration – 30 CFR 56 Subpart H – Loading, Hauling, and Dumping

D. U.S. Mine Safety and Health Administration – 30 CFR 56 Subpart M – Machinery and Equipment

E. U.S. Mine Safety and Health Administration – 30 CFR 77 Subpart E – Safeguards for Mechanical Equipment

F. U.S. Mine Safety and Health Administration – 30 CFR 77 Subpart K – Ground Control

G. U.S. Mine Safety and Health Administration – 30 CFR 77 Subpart Q – Loading and Haulage

H. National Association of Demolition Contractors – Safety Manual

I. SMS 038 – Cranes and Derricks

J. SMS 056 – Drilling Safety

K. Attachment 019-1 NA – Equipment Inspection Form

Note: The above regulatory resources are for U.S. operations only.

7. Supplemental Information

A. Backhoe Operator Skill Evaluation

B. Scraper Operator Skill Evaluation

C. Bulldozer Operator Skill Evaluation

D. Dump Truck Operator Skill Evaluation

E. Roller/Compactor Skill Evaluation

F. Front-End Loader Operator Skill Evaluation

G. Grader Operator Skill Evaluation

H. Excavator Operator Skill Evaluation

I. Water Truck Operator Skill Evaluation

URS	Health, Safety and Environment **DAILY HEAVY EQUIPMENT SAFETY INSPECTION CHECKLIST**	Attachment 019-1 NA Issue Date: June 1999 Revision 7: September 2011

Equipment ID No: _____ Inspector's Name: _____

Equipment Name: _____ Employee No.: _____

Beg. Hours: _____ End Hours: _____ Date: _____

INSTRUCTIONS: Each shift must inspect all applicable items indicated. If an unsatisfactory condition is observed, suspend operation of the equipment and report the unsatisfactory condition to the site supervisor immediately.

ITEM INSPECTED	CHECK IF SATISFACTORY	COMMENTS	CORRECTED BY	DATE
Equipment Operating Manuals Available	☐			
Falling Object Protective Structure (FOP)	☐			
Roll-Over Protection Structure (ROP)	☐			
Seat Belts	☐			
Operator Seat Bar(s)	☐			
Side Shields, Screens, or Cab	☐			
Lift-Arm Device	☐			
Grab Handles	☐			
Back-up Alarm – Working	☐			
Lights	☐			
Guards	☐			
Horn	☐			
Windshield Wipers	☐			
Glass, Mirrors	☐			
Anti-Skid Tread Clear of Mud	☐			
Safety Signs (i.e., counterbalance swing area)	☐			
Fire Extinguisher	☐			
General Condition	☐			
Fuel Connection	☐			
Oil (fuel and no leaks)	☐			
Clear of Extra Materials	☐			
Controls Function Properly	☐			
Hydraulic System (full and no leaks)	☐			
Parking Brake	☐			
Lift Arm and Bucket	☐			
Tires/Tracks	☐			
Steering	☐			
Breathing Air System	☐			
Blast Shields	☐			
Flammable Atmosphere Protective Equipment	☐			
Quantity of Fuel Added	☐			
Quantity of Oil Added	☐			

Operator Signature _____

URS	Health, Safety and Environment **BACKHOE OPERATOR SKILL EVALUATION**	SMS 019 NA Supplemental Information A Issue Date: February 2009 Revision 2: August 2010

Date _____ Employee Name _____ Supervisor _____

Description:

This equipment is used for primarily for excavation, although it may occasionally be used for other miscellaneous tasks for which crane or stick type equipment is required.

STEPS KEYPOINTS	SATISFACTORY
1) Demonstrated abilities a) Pre-shift inspection check list i) Check equipment for loose bolts, leaks; oil, hydraulic and water ii) Make sure area around the equipment is clear of people and other equipment iii) Check for fire extinguisher iv) Make sure that the following equipment is operational a) Brakes b) Lights c) Back-up alarms d) Hand rails & ladders e) Seat belts f) Tires if applicable g) Glass, wipers h) Gauges, including temperature, oil, and fuel v) Notify supervision of any equipment that is not operational vi) The operator can park or side line a piece of equipment that is unsafe to operate if it poses a danger or hazard to employees or property	☐ Yes ☐ No
2) Identification of equipment controls	☐ Yes ☐ No
3) Excavating techniques a) Benching, sloping b) Spoil removal from side wall c) Back filling operations d) Aware of surroundings and personnel near the swing radius of boom	☐ Yes ☐ No
4) Can arrange controls and boom for travel	☐ Yes ☐ No
5) Speed in relation to terrain (controlled speed)	☐ Yes ☐ No
6) Stock piling with front end bucket	☐ Yes ☐ No
7) Loading truck bed with bucket	☐ Yes ☐ No
8) Parking and shut down procedures a) Equipment line-up i) Straight line ii) Allow easy access for service b) Turn off all accessories c) Set all park brakes d) Lower bucket to ground e) Perform a general walk around looking for items for maintenance	☐ Yes ☐ No

URS	Health, Safety and Environment **SCRAPER OPERATOR SKILL EVALUATION**	SMS 019 NA Supplemental Information B Issue Date: February 2009 Revision 2: August 2010

Date _____ Employee Name _____ Supervisor _____

Description:

Drives a tractor to pull a steel bowl-like or box-like scoop (scraper), mounted on wheels, which scrapes up earth and transports it to a designated place; manipulates a series of levers to lower cutting edge of the scraper into the ground, to raise cutting edge when scraper is full, and to empty scraper.

STEPS KEYPOINTS	SATISFACTORY
1. Demonstrated abilities a) Pre-shift inspection check list i) Check equipment for loose bolts and leaks; check oil, air, hydraulic fluids and water ii) Make sure area around the equipment is clear of people and other equipment iii) Check for fire extinguisher iv) Make sure that the following equipment is operational a) Brakes b) Lights c) Back-up alarms d) Hand rails & ladders e) Seat belts f) Tires g) Glass, wipers h) Gauges, including temperature, oil, air and fuel v) Notify supervision of any equipment that is not operational vi) The operator can park or side line a piece of equipment that is unsafe to operate if it poses a danger or hazard to employees or property	☐ Yes ☐ No
2. Identification of equipment controls	☐ Yes ☐ No
3. Loading techniques a) Use of apron b) Use of cutting edge c) Pump loading etc	☐ Yes ☐ No
4. Shifting and hauling	☐ Yes ☐ No
5. Rough cut and fill	☐ Yes ☐ No
6. Spreading material	☐ Yes ☐ No
7. Fine grading	☐ Yes ☐ No
8. Obtaining compaction	☐ Yes ☐ No
9. Parking and shut down procedures a) Equipment line-up i) Straight line ii) Allow easy access for service b) Turn off all accessories c) Lower apron d) Lower bowl to the ground e) Perform a general walk around looking for maintenance items	☐ Yes ☐ No

URS	Health, Safety and Environment **BULL DOZER OPERATOR SKILL EVALUATION**	SMS 019 NA Supplemental Information C Issue Date: February 2009 Revision 2: August 2010

Date _____ Employee Name _____ Supervisor _____

Description:

Operates a large tractor with a concave steel blade or push block mounted in front of the chassis to level, distribute and push earth. This equipment may be used to push earth carrying equipment. At times a ripper attachment is used for ripping the earth prior to loading the scraper. Operator regulates height of blade or push block from ground and may help in necessary adjustments to equipment as needed.

STEPS KEYPOINTS	SATISFACTORY
1) Demonstrated abilities a) Pre-shift inspection check list i) Check equipment for loose bolts and leaks; check oil, air, hydraulic fluid and water ii) Make sure area around the equipment is clear of people and other equipment iii) Check for fire extinguisher iv) Make sure that the following equipment is operational a) Brakes b) Lights c) Back-up alarms d) Hand rails & ladders e) Seat belts f) Tracks g) Glass, wipers h) Gauges, including temperature, oil, air and fuel i) Audible horn v) Notify supervision of any equipment that is not operational vi) The operator can park or side line a piece of equipment that is unsafe to operate if it poses a danger or hazard to employees or property	☐ Yes ☐ No
2) Identification of equipment controls	☐ Yes ☐ No
3) Pushing techniques a) Use of push blade b) Loading of push load equipment	☐ Yes ☐ No
4) Use of ripper shanks	☐ Yes ☐ No
5) Rough cut and fill	☐ Yes ☐ No
6) Spreading material	☐ Yes ☐ No
7) Fine grading	☐ Yes ☐ No
8) Obtaining compaction by tracking in material	☐ Yes ☐ No
9) Parking and shut down procedures a) Equipment line-up i) Straight line ii) Allow easy access for service b) Turn off all accessories c) Lower rippers d) Lower blade to the ground e) Perform a general walk around looking for maintenance items	☐ Yes ☐ No

URS	Health, Safety and Environment **DUMP TRUCK OPERATOR SKILL EVALUATION**	SMS 019 NA Supplemental Information D Issue Date: February 2009 Revision 2: August 2010

Date _____ Employee Name _____ Supervisor _____

Description:

Drives a heavy-duty gasoline or diesel-powered truck used in hauling material to fill areas or dump sites. The truck is either a tandem rear axle type, or is a tractor truck, single or tandem axle, pulling a trailer. May service and make necessary adjustments for proper operation of equipment.

STEPS KEYPOINTS	SATISFACTORY
1) Demonstrated abilities a) Pre-shift inspection check list i) Check equipment for loose bolts and leaks; check oil, air, hydraulic fluid and water ii) Make sure area around the equipment is clear of people and other equipment iii) Check for fire extinguisher iv) Make sure that the following equipment is operational (1) Brakes (2) Lights (3) Back-up alarms (4) Hand rails & ladders (5) Seat belts (6) Tires (7) Glass, wipers (8) Gauges, including temperature, oil, air and fuel v) Notify supervision of any equipment that is not operational vi) The operator can park or side line a piece of equipment that is unsafe to operate if it poses a danger or hazard to employees or property	☐ Yes ☐ No
2) Identification of equipment controls	☐ Yes ☐ No
3) Truck Weighing a) Tare weights b) Gross Weights	☐ Yes ☐ No
4) Loading Techniques a) Parking into load patterns b) Bed preparation for material	☐ Yes ☐ No
5) Shifting and Hauling	☐ Yes ☐ No
6) Stockpiling	☐ Yes ☐ No
7) Backing with the use of mirrors	☐ Yes ☐ No
8) Dumping/Spreading Material a) Fill material b) Base course material c) Surface materials d) Asphalt e) Lowers truck bed (dump trucks) or dump chutes (belly dumps)	☐ Yes ☐ No
9) Parking and shut down procedures a) Equipment line-up i) Straight line ii) Allow easy access for service b) Turn off all accessories c) Use park brake d) Perform a general walk around looking for maintenance items	☐ Yes ☐ No

URS	Health, Safety and Environment **ROLLER / COMPACTOR OPERATOR SKILL EVALUATION**	SMS 019 NA Supplemental Information E Issue Date: February 2009 Revision 2: August 2010

Date _____ Employee Name _____ Supervisor _____

Description:

Operates a self-propelled gasoline or diesel machine, which has steel wheels used to compact earth fills, flexible bases and all types of materials. Rollers are also used for compaction to achieve a desired or specified density. Rides on the machine platform and moves lever and pedals or throttles to control and guide machine.

STEPS KEYPOINTS	SATISFACTORY
1) Demonstrated abilities a) Pre-shift inspection check list i) Check equipment for loose bolts and leaks; check oil, air, hydraulic fluid and water ii) Make sure area around the equipment is clear of people and other equipment iii) Check for fire extinguisher iv) Make sure that the following equipment is operational a) Brakes b) Lights c) Back-up alarms d) Hand rails & ladders e) Seat belts f) Tires, if applicable g) Glass, wipers h) Gauges, including temperature, oil, air and fuel v) Notify supervision of any equipment that is not operational vi) The operator can park or side line a piece of equipment that is unsafe to operate if it poses a danger or hazard to employees or property	☐ Yes ☐ No
2) Identification of equipment controls	☐ Yes ☐ No
3) Rolling techniques to obtain compaction a) Use of controls b) Vibratory controls c) Turns and maneuvers d) Aware of surroundings	☐ Yes ☐ No
4) Rolling patterns a) Staggered patterns with other rollers	☐ Yes ☐ No
5) Parking and shut down procedures a) Equipment line-up i) Straight line ii) Allow easy access for service b) Turn off all accessories c) Perform a general walk around looking for maintenance items	☐ Yes ☐ No

URS	Health, Safety and Environment **FRONT END LOADER OPERATOR SKILL EVALUATION**	SMS 019 NA Supplemental Information F Issue Date: February 2009 Revision 2: August 2010

Date _____ Employee Name _____ Supervisor _____

Description:

Operates a rubber tire or crawler type tractor with an attached bucket on front end. Moves a lever to raise and lower and dump contents of bucket. Machine is used to load materials from stockpiles, excavation, loading trucks.

STEPS KEYPOINTS	SATISFACTORY
1) Demonstrated abilities a) Pre-shift inspection check list i) Check equipment for loose bolts and leaks; check oil, air, hydraulic fluid and water ii) Make sure area around the equipment is clear of people and other equipment iii) Check for fire extinguisher iv) Make sure that the following equipment is operational a) Brakes b) Lights c) Back-up alarms d) Hand rails & ladders e) Seat belts f) Tires g) Glass, wipers h) Gauges, including temperature, oil, air and fuel v) Notify supervision of any equipment that is not operational vi) The operator can park or side line a piece of equipment that is unsafe to operate if it poses a danger or hazard to employees or property	☐ Yes ☐ No
2) Identification of equipment controls	☐ Yes ☐ No
3) Loading techniques a) Use of bucket and controls b) Crowding the pile c) Pump loading, etc. d) Loading patterns e) Loading trucks f) Loading scrapers	☐ Yes ☐ No
4) Control handling of contaminated soils	☐ Yes ☐ No
5) Shifting and hauling	☐ Yes ☐ No
6) Stockpiling	☐ Yes ☐ No
7) Mixing and moisture conditioning	☐ Yes ☐ No
8) Feeding crusher	☐ Yes ☐ No
9) Rough cut and fill	☐ Yes ☐ No
10) Spreading material	☐ Yes ☐ No
11) Parking and shut down procedures a) Equipment line-up i) Straight line ii) Allow easy access for service b) Turn off all accessories c) Lower bucket to the ground d) Perform a general walk around looking for maintenance items	☐ Yes ☐ No

URS	Health, Safety and Environment **GRADER OPERATOR SKILL EVALUATION**	SMS 019 NA Supplemental Information G Issue Date: February 2009 Revision 2: August 2010

Date _____ Employee Name _____ Supervisor _____

Description:

Rides in control cab of grader and moves levers and hand wheels to guide machine and regulate the scraper blade. Blade is mounted on a carrying and turning circle at the front of the machine. Equipment is used to level or mix soils and aggregates to grade and to lay asphalt and flexible base materials.

STEPS KEYPOINTS	SATISFACTORY
1) Demonstrated abilities a) Pre-shift inspection check list i) Check equipment for loose bolts and leaks; check oil, air, hydraulic fluid and water ii) Make sure area around the equipment is clear of people and other equipment iii) Check for fire extinguisher iv) Make sure that the following equipment is operational a) Brakes b) Lights c) Back-up alarms d) Hand rails & ladders e) Seat belts f) Tires g) Glass, wipers h) Gauges, including temperature, oil, air and fuel v) Notify supervision of any equipment that is not operational vi) The operator can park or side line a piece of equipment that is unsafe to operate if it poses a danger or hazard to employees or property	☐ Yes ☐ No
2) Identification of equipment controls	☐ Yes ☐ No
3) Leveling and scraping techniques a) Use of levers b) Use of cutting edge c) Controlling front wheel tilt d) Controlling crab motion	☐ Yes ☐ No
4) Shifting and traveling with loaded moe board	☐ Yes ☐ No
5) Rough cut and fill	☐ Yes ☐ No
6) Spreading material	☐ Yes ☐ No
7) Fine grading	☐ Yes ☐ No
8) Parking and shut down procedures a) Equipment line-up i) Straight line ii) Allow easy access for service b) Turn off all accessories c) Lower moe board to the ground d) Perform a general walk around looking for maintenance items	☐ Yes ☐ No

URS	Health, Safety and Environment **EXCAVATOR OPERATOR SKILL EVALUATION**	SMS 019 NA Supplemental Information H Issue Date: September 2011

Date _____ Employee Name _____ Supervisor _____

Description:

Operates a rubber tire or crawler type tractor with an attached bucket on front end. Moves a lever to raise and lower and dump contents of bucket. Machine is used to load materials from stockpiles, excavation, loading trucks.

STEPS KEYPOINTS	SATISFACTORY
1) Demonstrated abilities a) Pre-shift inspection check list i) Check equipment for loose bolts and leaks; check oil, air, hydraulic fluid and water ii) Make sure area around the equipment is clear of people and other equipment iii) Check for fire extinguisher iv) Make sure that the following equipment is operational a) Brakes b) Lights c) Back-up alarms d) Hand rails & ladders e) Seat belts f) Tires g) Glass, wipers h) Gauges, including temperature, oil, air and fuel v) Notify supervision of any equipment that is not operational vi) The operator can park or side line a piece of equipment that is unsafe to operate if it poses a danger or hazard to employees or property	☐ Yes ☐ No
2) Identification of equipment controls	☐ Yes ☐ No
3) Loading techniques a) Use of bucket and controls b) Crowding the pile c) Pump loading, etc. d) Loading patterns e) Loading trucks f) Loading scrapers	☐ Yes ☐ No
4) Control handling of contaminated soils	☐ Yes ☐ No
5) Shifting and hauling	☐ Yes ☐ No
6) Stockpiling	☐ Yes ☐ No
7) Mixing and moisture conditioning	☐ Yes ☐ No
8) Feeding crusher	☐ Yes ☐ No
9) Rough cut and fill	☐ Yes ☐ No
10) Spreading material	☐ Yes ☐ No
11) Parking and shut down procedures a) Equipment line-up i) Straight line ii) Allow easy access for service b) Turn off all accessories c) Lower bucket to the ground d) Perform a general walk around looking for maintenance items	☐ Yes ☐ No

URS	Health, Safety and Environment **WATER TRUCK OPERATOR SKILL EVALUATION**	SMS 019 NA Supplemental Information I Issue Date: September 2011

Date _____ Employee Name _____ Supervisor _____

Description:

Drives a pull type or truck type water truck. Waters roads, fills, and cut areas to suppress dust.

STEPS KEYPOINTS	SATISFACTORY
1) Demonstrated abilities a) Pre-shift inspection check list i) Check equipment for loose bolts and leaks; check oil, air, hydraulic fluid and water ii) Make sure area around the equipment is clear of people and other equipment iii) Check for fire extinguisher iv) Make sure that the following equipment is operational a) Brakes b) Lights c) Back-up alarms d) Hand rails & ladders e) Seat belts f) Tires g) Glass, wipers h) Gauges, including temperature, oil, air and fuel v) Notify supervision of any equipment that is not operational vi) The operator can park or side line a piece of equipment that is unsafe to operate if it poses a danger or hazard to employees or property	☐ Yes ☐ No
2) Identification of equipment controls	☐ Yes ☐ No
3) Loading Techniques a) Minimizes spillage b) Uses chocks or turns into berm	☐ Yes ☐ No
4) Shifting and Hauling	☐ Yes ☐ No
5) Properly applies water to ramps/corners	☐ Yes ☐ No
6) Backing with the use of mirrors	☐ Yes ☐ No
11) Parking and shut down procedures a) Equipment line-up i) Straight line ii) Allow easy access for service b) Turn off all accessories c) Use park break d) Perform a general walk around looking for maintenance items	☐ Yes ☐ No

URS SAFETY MANAGEMENT STANDARD

Hot Work

1. Applicability

This standard applies to the operations of URS Corporation and its subsidiary companies.

2. Purpose and Scope

The purpose of this procedure is to establish safe hot work practices to reduce/eliminate personal injury and potential fire and explosion hazards.

3. Procedures

The associated implementing regional procedures for this standard are included as attachments:

SMS 020 NA – North America; Australia / New Zealand

SMS 020 INT – International Operations (including Europe, Asia, South America and Africa)

URS SAFETY MANAGEMENT STANDARD

Hot Work

1. Applicability

This standard applies to the operations of URS Corporation and its subsidiary companies involving welding, torch cutting, grinding, and other spark- or heat-producing operations.

2. Purpose and Scope

The purpose of this standard is to establish safe hot work practices to reduce or eliminate personal injury and potential fire and explosion hazards.

3. Implementation

Implementation of this standard is the responsibility of the URS manager directing activities of the facility, site, or project location.

4. Requirements

A. General

1. Inspect the immediate work area, areas adjacent to the immediate work, areas beneath the work area, and the area immediately above the work area for flammable solvents, vapors, and gases. Do not perform the task if hot work cannot be performed safely.

2. Verify that planned hot work operations conform to client hot work procedures and permit requirements.

3. Issue Hot Work Permits (Attachment 020-1 NA) for any work that will generate sufficient heat or sparks and has the potential to ignite combustible and/or flammable materials. Complete the Hot Work Permit just prior to hot work activities commencing. Permits are not required for well-defined areas (e.g., maintenance shops, equipment lay-down areas).

4. Perform housekeeping in hot work areas to remove all flammable or combustible materials. Move all flammable and combustible materials at least 35 feet (10.7 meters) from the work area.

5. Cover all wood planking, scaffolds, wooden forms, and other combustible material that cannot be removed, with fire blankets or other suitable material. Additionally, employ spark guards and methods of confining welding slag to protect the flammable or combustible materials.

6. Provide a fire watch when performing hot work in areas where fires might develop, including:

    a. Where combustible materials are closer than 35 feet (10.7 meters) from the location of hot work;

    b. Where easily ignited combustibles are located more than 35 feet (10.7 meters) from the hot work;

    c. Where wall or floor openings are within 35 feet (10.7 meters) of the hot work, and may expose combustible materials; or

    d. Where combustible materials are adjacent to the opposite side of a metal wall, floor, or ceiling, and are likely to be exposed to radiant heat from the hot work.

7. Continue the fire watch for 30 minutes after completion of hot work.

8. Require that at least one 20-pound ABC fire extinguisher is available at each hot work location. Personnel assigned to use the fire extinguishers must be trained in the proper use and potential hazards of firefighting response actions.

9. Position welding screens or shields to protect workers and passers-by from welding arc rays.

10. Provide metal buckets or containers for disposal of electrode stubs.

11. Refer to SMS 010 – Confined Space Entry for ventilation and other requirements for hot work in confined spaces.

12. Identify the type of metal to be worked on and protective coatings that have been applied to the metal. Where coatings are flammable or toxic the coating will be stripped a minimum of four inches (10 centimeters) from the areas of heat application.

13. Ascertain the past content of drums, tanks, barrels, piping, or other containers. Thoroughly clean and/or purge containers so that no flammable vapors are present during hot work activities.

14. Provide adequate ventilation (natural or mechanical) for all welding, cutting, brazing, and related operations.

15. Ensure first aid equipment is available at all times during these operations.

B. Air Monitoring (Gas Testing)

1. If a potentially hazardous atmosphere exists, atmospheric conditions must be tested before hot work begins, and monitored periodically throughout the shift.

2. The atmosphere inside a container/vessel will be monitored for flammable vapor prior to performing any welding, cutting, or grinding on the container surface.

3. Ensure air monitoring equipment is properly calibrated in accordance with the manufacture's recommendations before use.

4. Acceptable atmospheric conditions are: Oxygen content between 19.5 and 23.5%; combustible gasses less than 10% of the lower explosive limit (LEL). If unsafe conditions are detected, stop work immediately.

C. Training

1. Personnel performing the duties of fire watch must be trained in the use of fire extinguishing equipment, and must be familiar with the methods of sounding a fire alarm.

2. Personnel working as cutters, welders, and supervisors must have adequate training and experience to perform their duties properly, with due regard to safety.

3. Personnel operating arc welding equipment and gas-shielded welding equipment must be judged competent with the maintenance and operational hazards of the equipment. If gas-shielded arc welding is done, they must be familiar with the American Welding Society Standard A6-1-1966.

D. Personal Protective Equipment

The following personal protective equipment is required for hot work activities:

1. Proper eye protection, such as welding hood with proper shade lens; cutting or burning goggles for torch cutting; and full face-shields for grinding. See SMS 029 – Personal Protective Equipment for proper lens shades.

2. Safety glasses must be worn under hoods and face-shields.

3. Appropriate gloves for task being performed.

4. Fire-resistant welding jackets or leathers.

5. High-top boots.

6. Clothing free of oil and grease, and preferably woven of non-synthetic fiber.

7. Hard hat.

8. Appropriate respiratory protection as required.

E. Torch-Cutting Operations

Personal conducting hot work activities must:

1. Inspect torches and hoses at the beginning of each shift for leaking shutoff valves, damaged hose and couplings, and tip connections.

2. Tag defective torches and remove from service until properly repaired by qualified personnel.

3. Require that oxygen and fuel gas regulators and valves are in proper working order.

4. Light torches with strikers or other approved means, never with matches or lighters.

5. Keep oxygen cylinders and fittings free of oil and grease.

6. Require that oxygen and fuel gas hoses are easily distinguishable from each other and are not interchangeable. Do not use a single hose having more than one gas passage.

7. Provide flashback arrestors/check valves on all oxygen and fuel gas regulator gauges and torch handles.

8. Remove hoses that show evidence of flashback or damage from service, and repair or discard.

9. Do not cover more than 4 inches out of 12 inches (10 centimeters out of 30 centimeters) of hose with tape when taping parallel lengths of hose to prevent tangling.

10. Use only hose couplings that cannot be unlocked or disconnected by means of a straight pull.

11. Use only ventilated boxes to store hose are ventilated.

12. String hoses overhead using non-metallic hangers, or otherwise position them to keep clear of walkways, ladders, and stairways.

13. Provide proper ventilation and respiratory equipment when cutting zinc-coated, cadmium-coated, chromium-bearing, mercury-bearing, or other toxic-material–containing metals. See SMS 042 – Respiratory Protection.

14. Shut off cylinder valves and bleed regulators and hoses when leaving cutting rigs unattended, and at the end of each shift.

F. Cylinder Handling

Personal conducting hot work activities must:

1. Secure cylinders in an upright position at all times, except for short periods of time while cylinders are actually being hoisted or carried, if necessary.

2. Replace and secure valve safety caps when cylinders are not in use.

3. Close valves, remove regulators, and replace valve safety caps before moving cylinders, unless cylinders are firmly secured on a special carrier intended for this purpose.

4. Close cylinder valves when work is finished, when cylinders are empty, or when cylinders are moved at any time.

5. Move cylinders by tilting and rolling them on their bottom edges; by use of a bottle cart; or with motorized equipment. Never lay cylinders on their sides and roll them.

6. Never drop cylinders or permit them to strike one another violently, even when empty.

7. Do not use magnets, chokers, or slings to hoist cylinders. Use a cradle or bottle rack designed and constructed for hoisting purposes.

8. Use only warm, not boiling, water to thaw cylinders and valves.

9. Provide bottle carts, chains, or other steadying devices to keep cylinders from being knocked over while in use.

10. Cylinders must be labeled with either the chemical or trade name of the contents.

G. Cylinder Usage and Storage

Personnel conducting hot work must:

1. Never use cylinders as rollers or supports, whether empty or full.

2. Never use damaged or defective cylinders.

3. Ensure no person other than the gas supplier attempts to mix gases in a cylinder. No one except the owner or person authorized by the owner of the cylinder may refill a cylinder. Cylinder contents must not be used for purposes other than those intended by the supplier.

4. Require all cylinders to be equipped with a handle or wrench so that they can be turned off immediately if necessary.

5. Stand to the side of the outlet and open valve slightly and close immediately prior to connecting a regulator to a cylinder. Never crack a valve near ignition sources.

6. Always open the cylinder valve slowly to prevent damage to the regulator. Do not open valves on fuel gas cylinders more than 1½ turns to ensure quicker closure.

7. Do not use fuel gas from cylinders through torches or other devices that are equipped with shutoff valves without reducing the pressure through a suitable regulator attached to the cylinder valve or manifold.

8. When the valve on a fuel gas cylinder is opened, if there is found to be a leak around the valve stem, close the valve and tighten the gland nut. If this action does not stop the leak, discontinue use of the cylinder, and properly tag and remove it from the work area. In the event that fuel gas leaks from the cylinder valve, rather than the valve stem, and the gas cannot be shut off, properly tag the cylinder and remove it from the work area. If a regulator attached to a cylinder valve will effectively stop a leak through the valve seat, the cylinder need not be removed from the work area.

9. Remove the cylinder from the work area if a leak develops at a fuse plug or other safety device.

10. Position cylinders where they will not be struck by sparks, slag, or flame.

11. Never take gas cylinders into confined spaces.

12. Place cylinders where they cannot become part of an electrical circuit.

13. Do not strike an electrode against a cylinder to strike an arc.

14. Do not use hammers or wrenches to open cylinders having fixed hand wheels.

15. Do not use acetylene at a pressure in excess of 15 pounds per square inch (psi) gauge pressure, or 30 psi absolute.

16. Store cylinders in a location where they will not be subjected to sources of artificial heat.

17. Separate oxygen cylinders in storage from fuel gas cylinders and combustible materials by at least 20 feet (6 meters) or by a noncombustible barrier at least 5 feet (1.5 meters) high, having a fire resistance rating of at least one-half hour.

18. Provide proper signs at storage areas of flammable or oxidizing gasses, such as "DANGER – FLAMMABLE; No Smoking or Open Flames."

19. Keep storage areas free of vegetation, trash, and other combustible materials.

20. Oxygen reacts violently in the presence of oil or grease. Keep oxygen fittings, cylinders, caps, couplings, regulators, hoses, and other apparatus away from and free of oil and grease. Do not handle oxygen cylinders while wearing oily gloves.

21. Do not use oxygen as a substitute for compressed air.

22. Remove regulators and replace valve safety caps when storing cylinders, or when cylinders will be left unattended. Always close the cylinder valve and release the gas from the regulator prior to regulator removal.

H. Pressure Reducing Regulators

1. Pressure regulators, including the gauges, must be in proper working order while in use; if not, remove from service.

2. Regulators must be an approved type for the type of gas to be utilized.

3. When a pressure-reducing regulator is attached to a compressed gas cylinder, the cylinder valve must be opened just slightly at first so that the regulator can take on pressure slowly, after which the valve may be turned open to its normal position. If the regulator takes on pressure too suddenly, it can damage the regulator and pressure gauges. The operator must stand to the side of the glass-covered gauges and not in front of them.

I. Arc Welding and Cutting Operations

1. Shield all arc welding and cutting operations by noncombustible or flameproof screens that protect other personnel from the direct rays of the arc.

2. Use only electrode holders that are specifically designed for arc cutting and welding, and are of a sufficient capacity to safely handle the maximum rated current required by the electrodes.

3. Require that electrode holders are properly insulated.

4. Remove electrodes from the holders and placeholders so they cannot make contact with people or conducting objects when leaving holders unattended.

5. Do not dip hot electrode holders in water.

6. Require that the welding machine frame is properly grounded.

7. Shut off the welding machine when the welder leaves his work for any appreciable length of time, at the end of each shift, or when the machine is to be moved.

8. Operators shall inspect equipment daily prior to use. Defective or damaged equipment shall not be used and shall be tagged and removed from service. Equipment shall be repaired by qualified personnel before being returned to service.

9. Require that the welding/cutting/ground cables meet the following requirements:

    a. Cables must be completely insulated, flexible, and capable of handling the maximum current requirements of the work in progress.

    b. Cables must be free from repair or splices for a minimum distance of 10 feet (3 meters) from the electrode holder, except when standard insulated connectors or splices with insulating value equal to the cable are used.

    c. Use insulated connectors of a capacity at least equal to that of the cable for splices. If connecting lugs are used, they must be completely and substantially insulated.

    d. Ensure that ground cables have a safe current-carrying capacity at least equal to the maximum output capacity of the unit or units that they services.

    e. Never attach a ground cable to a pipeline containing gases or flammable liquids.

    f. String all cables overhead with non-metallic hangers or otherwise position to keep clear of walkways, ladders, and stairways.

    g. Immediately remove all damaged and worn cable from service until properly repaired by qualified personnel.

5. Documentation Summary

The following information will be maintained in the project file:

A. Hot Work Permits

6. Resources

A. U.S. Occupational Safety and Health Administration (OSHA) Construction Standard – Welding and Cutting – 29 Code of Federal Regulations (CFR) 1926, Subpart J

B. U.S. OSHA Standard – Welding, Cutting, and Brazing – 29 CFR 1910, Subpart Q

C. ANSI Z49.1-2005, "Safety in Welding, Cutting, and Allied Processes"

D. American Welding Society Standard A6-1-1966

E. SMS 010 – Confined Space Entry

F. SMS 029 – Personal Protective Equipment

G. SMS 042 – Respiratory Protection

F. Attachment 020-1 NA – Hot Work Permit

URS SAFETY MANAGEMENT STANDARD

Housekeeping

1. Applicability

This standard applies to the operations of URS Corporation and its subsidiary companies.

2. Purpose and Scope

The purpose of this standard is to ensure proper housekeeping in office locations, on construction sites, and fixed work facilities to prevent cross contamination of hazardous materials, fires, and injuries resulting from slips, trips and falls.

3. Procedures

The associated implementing regional procedures for this standard are included as attachments:

SMS 021 NA – North America

SMS 021 INT – International Operations (including Europe, Asia, South America and Africa)

SMS AP5-021 – Australia / New Zealand

URS SAFETY MANAGEMENT STANDARD

Housekeeping

1. Applicability

This standard applies to the operations of URS Corporation and its subsidiary companies.

2. Purpose and Scope

The purpose of this standard is to ensure proper housekeeping in office locations, on construction sites, and fixed work facilities to prevent cross contamination of hazardous materials, fires, and injuries resulting from slips, trips and falls.

3. Implementation

Implementation of this standard is the responsibility of the URS manager directing activities of the facility or site.

4. Requirements

A. General

1. Require tools, materials, extension cords, hoses, and other equipment to be stowed at the end of the day. These materials must not be strewn about the site in a manner that may cause tripping or other hazards while in use.

2. Clear general waste, scraps, debris, and rubbish from work areas, passageways, and stairs in and around the facility on a daily basis. Do not throw or drop materials from upper levels to lower levels or to the ground unless disposal areas are provided and the area below is barricaded or secured.

3. Provide metal or other approved containers in adequate numbers to handle waste and rubbish disposal.

4. Garbage (including solid or liquid wastes), refuse, and hazardous waste such as caustics, acids, and toxic materials must be stored in approved and covered containers. Containers must be appropriately labeled as to contents. SMS 009 – Corrosive and Reactive Materials and SMS 017 – Hazardous Waste Operations, provide additional information on hazardous materials.

5. Store supplies and generated wastes or scrap in locations away from walkways and in a manner that will not trip workers. Maintain

stored materials in safe, neat stockpiles for ease of access and to prevent collapse or falling.

6. Keep weeds and vegetation away from stockpiled materials and walkways.

7. Maintain flooring, stairways, gangways, access ways, and walkways in a clean, dry, and smooth condition.

8. Ensure that oil, grease, water, ice, or other hazardous materials that may cause slipping or fire hazards are removed promptly.

9. Ensure employees are trained in appropriate waste disposal procedures.

10. Identify a member of line management (typically a site supervisor or foreman) with the responsibility of ensuring proper waste disposal and storage requirements are followed.

B. Regularly inspect the work area for slip and trip hazards.

1. Office and trailer locations – Inspect work areas at least quarterly. Use the inspection sheet provided as Attachment 021-1 NA.

2. Field sites – Inspect sites at least biweekly. Use the inspection sheet provided as Attachment 021-1 NA.

3. Field sites performing aircraft and vehicle maintenance – Inspect the sites weekly if sanding, drilling, grinding, and/or painting operations are conducted. Use the inspection sheet provided as Attachment 021-2 NA.

4. For European operations, the Workplace Inspection Checklist - Attachment 021-3 NA must be completed monthly.

C. Thoroughly investigate all injuries resulting from slips, trips, and falls on site. Correct those housekeeping conditions contributing to injuries.

D. Project management personnel shall address the following issues in project pre-planning:

1. Estimate the types and quantities of waste or scrap generated during site-specific project activities.

2. Identify any needs for specialized containers or waste disposal services.

3. Coordinate waste disposal options with the client.

4. Identify any hazards associated with handling or storage of waste or scrap and determine if control measures, including engineering, administrative controls, or personal protective equipment, are required.

5. Identify waste or scrap handling and storage procedures that will minimize impacts to site personnel, client operations, and the environment.

6. Identify waste segregation criteria, as well as opportunities for recycling.

E. For operations involving work with hazardous materials (including metals associated with aviation maintenance activities), the manager directing activities of the facility or site will assure that:

1. Eating, drinking, and smoking areas are removed from the work areas. Hand washing stations shall be available nearby for employees entering the eating and smoking areas.

2. Resting, eating and smoking areas will be kept clean.

3. Work areas will be cleaned to remove accumulated contaminants. Working surfaces, including workbenches, desks, and other lateral working surfaces, will be wiped down daily with an appropriate cleaner (soap, solvent, or oxidizing agent). Walking surfaces will be cleaned to remove accumulated contaminants weekly or more often.

4. Chemicals shall be properly stored to minimize the potential for spills. Chemicals shall be stored in proper containers, organized, labeled and in secondary containment, when required.

5. Spill cleanup materials must be accessible and appropriate for the materials that may be spilled.

6. Proper communication measures shall be in place and initiated upon a spill event. Procedures should be based on type and quantity of materials spilled. Spills will be reported to regulatory agencies when required by regulations.

7. Employees shall be trained on the proper response procedures for spilled materials. Training shall address proper communication procedures in the event of a spill.

5. Documentation Summary

The following information will be maintained in the project file:

A. Completed Inspection Sheets.

B. Spill Response Training

6. Resources

A. U.S. Occupational Safety and Health Administration (OSHA) Standard – Sanitation – 29 Code of Federal Regulations (CFR) 1910.141

B. U.S. OSHA Standard – Walking and Working Surfaces – 29 CFR 1910.22.

E. SMS 009 – Corrosive and Reactive Materials

F. SMS 017 – Hazardous Waste Operations

G. Attachment 021-1 NA – Housekeeping Inspection Sheet

H. Attachment 021-2 NA – Special Housekeeping Inspection Sheet - Sanding, Drilling, Grinding, and Painting

I. Attachment 021-3 NA – Workplace Inspection Checklist

URS	Health, Safety and Environment **HOUSEKEEPING INSPECTION SHEET**	Attachment 021-1 NA Issue Date: June 1999 Revision 7: September 2012

Building or Location: _____

Inspection Conducted by: _____ **Date:** _____

Check Yes, No, or NA for Not Applicable.

General Site Housekeeping

1.	Do not block exits or emergency equipment.	☐ Yes	☐ No	☐ NA
2.	Do not leave equipment or materials lying on the ground.	☐ Yes	☐ No	☐ NA
3.	Keep storage areas free from the accumulation of materials that constitute trip hazards.	☐ Yes	☐ No	☐ NA
4.	Remove scrap materials and other debris from work area.	☐ Yes	☐ No	☐ NA
5.	Remove combustible scrap and debris by safe means at regular intervals.	☐ Yes	☐ No	☐ NA
6.	Store oily rags in metal cans with tight fitting lids. Remove oily rags at the end of the day.	☐ Yes	☐ No	☐ NA

Visibility

7.	Ensure that halls, stairways and walkways are well lit.	☐ Yes	☐ No	☐ NA
8.	Ensure that well designed light switches are present in areas where walkways are not always lighted.	☐ Yes	☐ No	☐ NA
9.	Ensure that dust, smoke or steam does not create poor visibility.	☐ Yes	☐ No	☐ NA
10.	Ensure that glare from floodlights or windows does not create poor visibility in work areas.	☐ Yes	☐ No	☐ NA

Stairs

11.	Ensure that handrails are tight and at the proper level.	☐ Yes	☐ No	☐ NA
12.	Ensure that handrails extend past the top and bottom step.	☐ Yes	☐ No	☐ NA
13.	Ensure that white or yellow strips are painted on the first and last step for better visibility. (Not an OSHA requirement – recommendation only).	☐ Yes	☐ No	☐ NA
14.	Ensure that steps are not rough or defective.	☐ Yes	☐ No	☐ NA
15.	Ensure that stair treads are wide enough and risers consistently spaced.	☐ Yes	☐ No	☐ NA
16.	Ensure that stairs are free of obstructions.	☐ Yes	☐ No	☐ NA

Floor Conditions

17.	Ensure that floors of every workroom are clean, and so far as possible, in a dry condition.	☐ Yes	☐ No	☐ NA
18.	Ensure that floors are not oily, overly waxed, or polished.	☐ Yes	☐ No	☐ NA
19.	Where wet floors or processes are present, provide proper drainage and false floors, mats, or other dry standing places.	☐ Yes	☐ No	☐ NA
20.	Finish floor surfaces with non-slip coatings where spills are likely.	☐ Yes	☐ No	☐ NA
21.	Ensure that floors and passageways are free from protruding nails, splinters, holes, or loose boards.	☐ Yes	☐ No	☐ NA
22.	Ensure that floors are free of holes and depressions.	☐ Yes	☐ No	☐ NA
23.	Ensure that aisles or pathways are wide enough for easy passage and for carrying objects (48 inches is recommended).	☐ Yes	☐ No	☐ NA

24.	Ensure that ramps are covered with non-slip surfaces or matting.	☐ Yes	☐ No	☐ NA
25.	Keep carpets or rugs free from loose or frayed edges that may catch boots or shoes.	☐ Yes	☐ No	☐ NA
26.	Keep walkways free from extension cords, air hoses and cables.	☐ Yes	☐ No	☐ NA
27.	Keep pathways free from boxes, containers, machine parts, or other tripping hazards.	☐ Yes	☐ No	☐ NA

Ground Conditions

28.	Ensure that trip hazards are not present.	☐ Yes	☐ No	☐ NA
29.	Ensure that fall hazards are not present.	☐ Yes	☐ No	☐ NA
30.	Ensure that holes or changes in ground elevation are either filled or guarded.	☐ Yes	☐ No	☐ NA
31.	Ensure that muddy walkways are filled with gravel to reduce slipping.	☐ Yes	☐ No	☐ NA
32.	Ensure that all employees who work in wet or greasy conditions wear slip resistant footwear.	☐ Yes	☐ No	☐ NA

Equipment

33.	Ensure that vehicle steps are of adequate size, surface placement for safe dismounting.	☐ Yes	☐ No	☐ NA
34.	Ensure that hand grips or ladders are adequate for getting into and out of equipment.	☐ Yes	☐ No	☐ NA
35.	Ensure that ladders have been checked for damage and removed from service if found unsafe.	☐ Yes	☐ No	☐ NA

Chemicals

36.	Ensure that chemicals are properly stored to minimize a potential spill.	☐ Yes	☐ No	☐ NA
37.	Ensure that spill cleanup materials are available and appropriate for the type of potential spill.	☐ Yes	☐ No	☐ NA

Identify areas that need attention and describe the corrective actions to be implemented:

_____

_____

_____

_____

_____

I certify that the above inspection was performed to the best of my knowledge and ability, based on the conditions present.

_____ _____

Signature Date

URS	Health, Safety and Environment **SPECIAL HOUSEKEEPING INSPECTION SHEET** **Sanding / Drilling / Grinding / Painting**	Attachment 021-2 NA Issue Date: June 1999 Revision 7: September 2012

Week Ending: _____

Checklist Completed by: _____

The following checklist will be used as a guide and is considered the minimum housekeeping requirement for work areas where sanding, drilling, and grinding operations on aircraft and vehicles are performed. Dust from sanding/drilling/grinding on aircraft and vehicles contain metals, chemical coatings, and paint-based contaminants that can accumulate on work areas and flat surfaces. Good housekeeping practices throughout the work area are the key to mitigating this hazard.

	Mon	Tues	Wed	Thurs	Fri	Sat	Sun
1. Remove all metal grindings and dust from sanding or grinding areas using a vacuum equipped with a HEPA filter.	☐	☐	☐	☐	☐	☐	☐
2. Remove contaminants on top of flat surfaces with HEPA-filter–equipped vacuum. *Do not use fox-tails or low pressure air to blow dust off work benches, work areas or clothes.*	☐	☐	☐	☐	☐	☐	☐
3. Wipe down surfaces of workbenches with damp rags using water and a surface-active cleanser. (A weekly requirement, more often if needed)	☐	☐	☐	☐	☐	☐	☐
4. Sweep floors daily, without creating dust clouds. Wet mop work area floors. (A weekly requirement using water and a surface-active cleanser).	☐	☐	☐	☐	☐	☐	☐
5. Wipe down all other surfaces (besides the workbench) where dust collects using damp rags. (A bi-weekly requirement).	☐	☐	☐	☐	☐	☐	☐
6. Monitor personnel to ensure no drinking or eating occurs in the industrial work areas.	☐	☐	☐	☐	☐	☐	☐
7. Monitor personnel recognizing the hazards of cross contamination. Ensure all personnel are washing their hands before eating, drinking, or smoking on breaks.	☐	☐	☐	☐	☐	☐	☐

Identify areas that need attention and describe the corrective actions to be implemented:

_____

_____

_____

_____

URS	Health, Safety and Environment **WORKPLACE INSPECTION CHECKLIST**	Attachment 021-3 NA Issue Date: June 1999 Revision 7: September 2012

- Where no problems have been identified, place a check in the appropriate box under the date of the inspection.
- Where a problem has been identified, ensure that a correction action is assigned and completed.

Office:	**Inspected By:**									**Year:**		
Month:	**J**	**F**	**M**	**A**	**M**	**J**	**J**	**A**	**S**	**O**	**N**	**D**
Date of Inspection:												
1. Emergency Preparedness Plan (or equivalent)	☐	☐	☐	☐	☐	☐	☐	☐	☐	☐	☐	☐
2. Fire	☐	☐	☐	☐	☐	☐	☐	☐	☐	☐	☐	☐
3. Entrances and doors	☐	☐	☐	☐	☐	☐	☐	☐	☐	☐	☐	☐
4. Workstations & equipment	☐	☐	☐	☐	☐	☐	☐	☐	☐	☐	☐	☐
5. Restricted areas	☐	☐	☐	☐	☐	☐	☐	☐	☐	☐	☐	☐
6. Steps/staircases/ladders	☐	☐	☐	☐	☐	☐	☐	☐	☐	☐	☐	☐
7. Floors	☐	☐	☐	☐	☐	☐	☐	☐	☐	☐	☐	☐
8. Electrical Equipment	☐	☐	☐	☐	☐	☐	☐	☐	☐	☐	☐	☐
9. Lighting	☐	☐	☐	☐	☐	☐	☐	☐	☐	☐	☐	☐
10. Temperature	☐	☐	☐	☐	☐	☐	☐	☐	☐	☐	☐	☐
11. Building Services	☐	☐	☐	☐	☐	☐	☐	☐	☐	☐	☐	☐
12. Ventilation	☐	☐	☐	☐	☐	☐	☐	☐	☐	☐	☐	☐
13. Toilet Facilities	☐	☐	☐	☐	☐	☐	☐	☐	☐	☐	☐	☐
14. Kitchens	☐	☐	☐	☐	☐	☐	☐	☐	☐	☐	☐	☐
15. General Cleanliness	☐	☐	☐	☐	☐	☐	☐	☐	☐	☐	☐	☐
16. Chemical Substances	☐	☐	☐	☐	☐	☐	☐	☐	☐	☐	☐	☐
17. Refuse Facilities	☐	☐	☐	☐	☐	☐	☐	☐	☐	☐	☐	☐
18. First Aid	☐	☐	☐	☐	☐	☐	☐	☐	☐	☐	☐	☐
19. Access roads and car parks	☐	☐	☐	☐	☐	☐	☐	☐	☐	☐	☐	☐
20. Elevators	☐	☐	☐	☐	☐	☐	☐	☐	☐	☐	☐	☐
21. Display Screen Equipment	☐	☐	☐	☐	☐	☐	☐	☐	☐	☐	☐	☐
22. Systems of Work	☐	☐	☐	☐	☐	☐	☐	☐	☐	☐	☐	☐
23. Water	☐	☐	☐	☐	☐	☐	☐	☐	☐	☐	☐	☐
24. Electrical Installation	☐	☐	☐	☐	☐	☐	☐	☐	☐	☐	☐	☐
25. H&S Meetings/Notices	☐	☐	☐	☐	☐	☐	☐	☐	☐	☐	☐	☐

GUIDANCE NOTES/CHECKLISTS

To help in the completion of the "Workplace Inspection Checklist" the following brief notes summarize some of the most important aspects. Individual offices may need to modify them to deal with their particular arrangements.

The aspects are listed below in the same order as on the Form.

1.	**Emergency Preparedness Plan (or equivalent)**	
	Location	During the walk-around inspection of the office, investigate the cause of any entries made during the previous month.
	Reporting	All accidents/injuries dangerous occurrences known to have occurred in the property during the past month to be adequately reported.
	Check Site	Employees to have easy access to the plan whenever necessary.
2.	**Fire**	
	Fire Doors **Fire Exits**	All fire doors and exits to be closed, unobstructed and easy to open.
	Fire Extinguishers	On hooks/brackets provided.
	Records	Check that fire alarm test is being carried out and that fire alarm system is being maintained
3.	**Entrances and Doors**	
	Entrances	Doors and doorways not obstructed by any article or substance.
		Doormats/doorsteps securely fixed and not constituting a tripping hazard.
	Doors	Doors and gates secure on their hinges or sliding runners.
		Glazing panels on 2-way doors not covered over.
		Fire doors not fastened or wedged open.
		Fire doors able to completely close from fully open, automatically.
4.	**Workstations and Equipment**	
	Workstations (NB: Includes maintenance tools, equipment, printing equipment, etc.)	Workstation furniture and work equipment safe, clean and in a good state of repair.
		Workstation furniture and work equipment suitable for the person using it and for the work they are doing.
5.	**Restricted Areas**	
	Access Secured	Doors securely locked.
		Unauthorized access impossible by normal (unforced) means.
	Keys	Keys not accessible to unauthorized persons.
6.	**Steps, Staircases and Ladders**	
	Structure	Treads and handrails secure and in good repair.
	Tripping	Carpets/coverings untorn and secure.
		Edge strips well fixed.
		Steps and staircases free from litter.
		Stairs and landings clear of any unnecessary obstructions.
	Slipping	Surfaces of steps not slippery.
		Spillages have been properly cleaned up.
	Lighting	All stairs adequately lit so that the edges of each step can be clearly seen.
	Cleanliness	All steps/staircases clean and free from dust dirt and litter.
	Ladders	No part of ladder damaged or weakened. Securely positioned/fixed at base and top to prevent slipping, moving or falling of ladder when in use, or held by another person stationed at the foot of the ladder, at a slope of approximately 75°. Inspection Record available

7. Floors	
Tripping	All floor coverings even, level and securely fixed down.
	No obstructions in thoroughfares, which could cause people to trip or fall.
Slipping	Where floor surfaces are being polished, suitable signs warning of the slipping hazard are being displayed.
	Spillages have been properly cleaned up.
Cleanliness	All floors are clean and free from dust, dirt and litter.
8. Electrical Equipment	
Electrical Equipment	Working satisfactorily
	Undamaged in any way.
	All used in a proper and safe manner.
Wiring	No exposed wires or circuitry.
Portable Electric Equipment	Checked in accordance with SMS 012.
9. Lighting	
Lamps, Light Fittings and Switches	All lamps working satisfactorily and providing suitable light intensity.
	Light fittings are suitably orientated for task/ activity.
	Not damaged in any way, securely fixed and clean.
10. Temperature	
Services Functioning	Air conditioning and heating systems operating as and when required.
Air Temperature	No complaints of low or high temperatures from the building occupants (offices should be > 61°F (16°C) after first hour).
Drafts	No unacceptable drafts around doors, windows or grilles or through fixed or broken openings.
Thermometers	One thermometer to be provided for each floor.
11. Building Services Equipment	
Indications of Malfunctioning Building Services Equipment:	Leaks of water, oil or gas.
	Presence of unfamiliar noises.
	Presence of unfamiliar smells.
	Non-operation of important components.
	Gauges showing abnormal readings.
12. Ventilation	
Indications of Inadequate Ventilation Rates:	Presence of strong odors.
	Very high temperatures in summer.
	Condensation problems.
	Drafts.
13. Toilet Facilities	
Hygienic	Bathroom stalls, urinals, floors, hand basins, taps and door handles kept clean.
Tidy	Bathroom areas not used for storage or food/drink preparation.
	Litter-free and bins (including sanitary) regularly emptied.
Well Stocked	Sufficient and suitable provision of toilet paper and soap.
Well Maintained	Mechanical hand drying facilities fully operational, if provided.
	Towels clean, if provided.
	Bathroom stalls, urinals, hand basins and taps in good order and functioning properly.
Ventilation	Mechanical ventilation is operational, e.g., providing and/or extracting air. Problems evidenced by strong odors and/or lack of air movement.
	Windows and/or grilles open satisfactorily.

14. Kitchens	
Housekeeping	Kitchen area not being used for any other purpose than the preparation and consumption of food and drink, e.g. storage of cleaning materials.
	Kept clean and tidy.
Hygiene	No signs of infestation by insects or rodents.
	No signs of stale or rotten foodstuffs.
Appliances	Sharp kitchen implements suitably stored.
	All appliances in good working order.
15. General Cleanliness	
Building Materials	Walls, floors, etc. clean and free from dust.
	Paint or plaster not flaking off walls or ceilings.
Furniture	Furniture clean and free from dust.
Windows	Windows not excessively dirty.
Tidiness	Corridors, fire escapes, electrical switch closets, etc. kept free of litter and are not used for storage.
Cleaning Materials	Suitable provision of cleaning chemicals and personal protective equipment, e.g. gloves; cleaning chemicals are suitable stored.
16. Chemical Substances	
Storage and Labelling of Chemicals	Chemicals in secure, undamaged and clearly labelled containers.
	Chemicals stored so that they are not liable to fall or damage either themselves or other materials.
	Chemicals kept within locked closet if required.
17. Refuse Facilities	
Well Maintained	Bins and other refuse facilities in good state of repair.
Clean and Tidy	Waste facilities not overflowing.
	All refuse is being regularly collected.
	Area around waste facilities kept clean and tidy.
	Refuse bags/bins not presenting an obstruction or tripping hazard to the public or employees.
18. First Aid (See also SMS 065 NA and Attachment 065-8NA)	
First Aid Kit	First aid kit fully stocked with listed items.
	First aid box contains guidance on the treatment of injured people.
	First aid box situated in the correct appointed location.
	Drugs, creams or ointments should not be available for use by employees, visitors or tenants (e.g. Aspirin).
First Aider/Appointed Person	At least one “appointed person” to be available during the designated working day times when people are at work, to administer first aid assistance and/or call an ambulance.
First Aid Notices	Check that first aid notices giving location of first aid kit and name and location of appointed persons are up-to-date.
19. Access Roads and Car Parks	
Access and Egress	No obstructions to the safe and easy passage of vehicles throughout the property's traffic routes.
	All vehicle parking bays free from obstructions.
	In areas where vehicles and pedestrians circulate, the lines of sight available to both are not obscured.
	Gates/barriers in full working order and not presenting a risk to health and safety.
	Any fire escape route through a garage or car park not blocked by vehicles.
Signage	Signs directing traffic or pedestrians in place, visible, and, where possible to assess, being adhered to.
Cleanliness	Car-parking areas clean and tidy.

20. Elevators	
Elevators	Doors fully operational.
	No obvious signs of damage.
	Emergency phone operational.
	No unusual sounds when operating.
	Maintained in a clean condition and free from litter.
	Inspection Certificates
21. Display Screen Equipment (See also SMS 054 NA and Attachment 054-1 NA)	
Lighting	Visual conditions for the task satisfactory, no glare from lights/sunlight, no shadowing and the screen easy to read.
Noise	Minimal nuisance from printers and heating/ventilation units
Posture	Operator able to adjust equipment in order to maintain good posture.
Furniture	Furniture and work equipment clean and in good repair.
Training and Information Packages	Information to be provided close to the workstation on the use of computer package(s), adjustment of display screen equipment and furniture, maintaining a good working posture.
Risk assessment	Completed by the main user and Office Safety Supervisor and satisfactory.
22. Systems of Work and Work Equipment	
Working Methods and Work Equipment	Safe working procedures established and being adhered to.
	Manufacturer's instructions for the equipment used are being followed. Equipment working efficiently and in good repair.
	Appropriate protective clothing is being used, if necessary.
	Tools are properly stored when not in use, and safety carried especially when used at a height.
Permits to Work	In hazardous places/situations (e.g. roof work), permit to work system in place and being adhered to.
23. Water	
Little-used Outlets	Flush (run) any little-used hot and cold outlets for minimum of 3 minutes each month (5 minutes if very distant from storage).
Hot Water Supplies	Producing hot (>122°F; >50°C) and not scalding (<149°F; <65°C) water.
24. Electrical Installation	
Electrical Equipment	Working satisfactorily
	Undamaged in any way.
	All used in a proper and safe manner.
Wiring	No exposed wires or circuitry.
Installation	Tested every 5 years and certified by Competent Person
25. H&S Meetings/Notices	
Management Meetings	Attend Management Meetings at which H&S is discussed. The Meeting should discuss as a minimum: Updates to Safety Management System, Accidents/Incidents, Results of Audits, Corrective actions, Project-related H&S and any issues raised by the Office Safety Representative.
H&S Committee Meetings	Attend H&S Committee Meetings and ensure record of meeting is made available to employees.
Notices	Legally required notices such as OSHA Poster (OSHA Job Safety and Health: It's the Law), and URS material (4sight, Lessons Learned, etc.) on display.

URS SAFETY MANAGEMENT STANDARD

Lockout and Tagout Safety

1. Applicability

This standard applies to operations of URS Corporation and its subsidiary companies.

2. Purpose and Scope

This purpose of this standard is to outline the minimum requirements for the lockout/tagout of energy isolating devices.

3. Procedures

The associated implementing regional procedures for this standard are included as attachments:

SMS 023 NA – North America

SMS 023 INT – International Operations (including Europe, Asia, South America and Africa)

SMS AP7-023 – Australia / New Zealand

URS SAFETY MANAGEMENT STANDARD

Lockout and Tagout Safety

1. Applicability

This standard applies to operations of URS Corporation and its subsidiary companies in field and office locations that are engaged in the lockout and tagout of energized sources.

2. Purpose and Scope

This standard outlines the minimum requirements for the lockout/tagout of energy isolating devices. It will be used to ensure that a machine or piece of equipment is isolated from all potentially hazardous energy before employees perform servicing or maintenance activities where the unexpected energization, start-up, or release of stored energy could cause injury.

Types of energy sources that will be protected against include, but are not limited to, the following:

A. Electrical circuits.

B. Fluid systems (water and liquid product).

C. Pneumatic systems.

D. Flammable systems (including liquid and gaseous fuels).

E. Thermal systems (steam).

F. Gravity systems.

G. Hazardous material systems.

3. Implementation

Implementation of this procedure is the responsibility of the URS manager directing activities of the facility or site.

4. Requirements

A. General

1. "Authorized employee" is a person who locks/tags out machines or equipment in order to perform servicing or maintenance on that machine or equipment and who has received the training described in Section C.

2. "Affected employee" is an employee whose job requires him/her to operate or use a machine or equipment on which servicing or maintenance is being performed under lockout and tagout (LOTO), or whose job requires him/her to work in an area in which such servicing or maintenance is being performed.

3. "Qualified person" is person who is familiar with the construction and operation of the equipment and the hazards involved, and who

    a. Requests de-energizing of an energy source.

    b. Inspects de-energizing with the authorized employee.

    c. Assures that an authorized employee has locked and tagged the source.

    d. Requires that all applicable authorized employees affix lock/tags at the same locations(s).

    e. Operates the equipment controls or otherwise verifies that the equipment cannot be restarted after being locked out.

    f. Coordinates the continuation of LOTO protection through shift or personnel changes.

    g. Controls accountability of locks and tags.

    h. Makes appropriate entries on the Lock and Tag Log – Attachment 023-1 NA. Where the number of energy control activities is extensive or the scope of energy controls is complex, the qualified person may choose to use the Lockout/Tagout Permit – Attachment 023-2 NA as an aid.

    i. Conducts tests and visual inspections prior to reenergizing to check that circuits and equipment can be safely energized.

4. Employees will not work on or in equipment, vessels, etc. that are *not* in a "zero energy state."

5. Coordinate all energy control activities with client, owner, contractor, and subcontractor practices and programs.

6. Require that all locks used in a LOTO program are marked in such a way so as to distinguish the locks from locks used for any other purpose.

7. Require that all locks are keyed differently and that only one key exists for each lock and remains in the possession of the authorized employee to whom it has been assigned.

8. Require that any employee who fails to follow these procedures, or who tampers with or removes a LOTO device without authorization, will be subject to disciplinary action.

B. Procedure

Follow this LOTO procedure whenever the unexpected operation of equipment, switch, valve, or other energy sources could injure someone. Only authorized employees may perform jobs requiring LOTO procedures. Common jobs for which LOTO is used include repairing electrical circuits, cleaning or oiling machinery with moving parts, clearing jammed mechanisms, replacing control units or valves, and performing preventative maintenance.

1. **Step 1** – Achieving Zero Energy

   a. Before turning off a machine or equipment, you must know the type and magnitude of the energy, the hazards of the energy to be controlled, and the way the energy will be controlled. Identify and locate all sources of energy that could affect individuals involved. Note that more than one source of energy may be involved at each machine or piece of equipment.

   b. Determine whether more than one employee or crew will be working on the machine or equipment. Also, evaluate the potential for personnel on multiple shifts to be working on the equipment.

   c. Notify all affected personnel that equipment is going to be de-energized and accessed. This can be done verbally or visually, or by hanging a warning tag on the control panel.

   d. Disconnect the main sources of power by breaking the primary power circuit, valve, pipe, etc. Locking out a low voltage control circuit is not considered breaking a main power source.

   e. Disconnect each separate power source of multiple power systems (e.g., air over hydraulic, electric over hydraulic).

f. Release all residual energy remaining behind the power source (e.g., hydraulic or air pressure). If there is a possibility of re-accumulation of stored energy level, verify isolation until the task is complete or the possibility no longer exists. Use the following methods to guard against energy left in equipment after it has been isolated:

   i. Inspect the system to ensure that all parts have stopped moving.

   ii. Install grounding wires.

   iii. Relieve trapped pressure.

   iv. Release the tension of springs or block the movement of spring-driven parts.

   v. Block or brace parts that could fall because of gravity.

   vi. Bleed pneumatic and hydraulic systems and leave vent valves open. Block parts in hydraulic and pneumatic systems that could move from loss of pressure.

   vii. Drain process piping systems and close valves to prevent the flow of hazardous materials.

   viii. Use blank flanges on lines without valves that must be blocked.

   ix. Purge reactor tanks and process lines.

   x. Dissipate extreme heat or cold, or wear protective clothing.

   xi. Remove fuses from electrical circuits.

   xii. Monitor situations where there is a potential for stored energy to re-accumulate.

g. Lockout devices and tags must be applied as follows:

   i. In a manner that will hold the energy-isolating device in a safe or off position.

ii. Tags (when used) will clearly show the operation or movement from the safe or off position. Examples of sample tags are provided in Supplemental Information A.

iii. When both tags and locks are used, the tag should be placed at the same point as the lock.

iv. When locks cannot be used and tags cannot be placed directly on the energy-isolating device, the locks/tags need to be highly visible and placed as close as possible.

v. Note that locks and tags by themselves do not de-energize equipment. Attach them only after the machinery has been isolated from its energy sources.

h. Secure all power sources in the de-energized position with a lockout device. Note that in many situations the equipment requiring lockout may belong to the facility owner/manager (our clients). These facilities typically require their procedures to be followed and their equipment to be used. Use multiple lock devices when more than one lock is required. The authorized person will identify and notify all persons protected by the lockout. Each person who is protected by the lockout:

   i. Places a signed lock and tag on source location(s).

   ii. Keeps the key to his/her own lock.

   iii. Removes his/her own lock (only exception: person not on site and person is contacted).

   iv. Works *only* on protected source(s).

   v. Removes lock and tag at completion of work shift or transfer.

   vi. If more than one employee is required to lockout and tag a piece of equipment, a LOTO device capable of accepting multiple locks will be used. Under no circumstances is an employee allowed to work on a lock and tag belonging to another employee.

i. If the energy source can be locked, this is the preferred method of tagging. (Lockout devices require a key or

combination to hold it in a safe position). If tagout must be used, the tag must be weather and chemical resistant, be standard in size and color, and have a text warning such as DO NOT START, DO NOT OPEN, etc.

j. Block or blank any machinery, device, or piping system that can move on its own or deliver energy with or without the power source.

k. Test equipment prior to working on it to ensure that all sources of energy have been isolated. This may include verifying that the main disconnect switch or circuit breaker can't be moved to the "on" position, depressing all start buttons and activating controls, or using a voltmeter to check for potential energization sources.

2. **Step 2** - Preparing to Re-energize

   a. Once the task has been completed, ensure that tools are picked up and safety chains, guards, guard rails, warning signs, etc. are replaced. Notify affected personnel that the lockout device is going to be removed.

   b. Position controls correctly for start-up; ensure that the machine is ready for operation.

   c. Remove locks and tags. This can be done only by the person applying the lock and/or tag, except as noted elsewhere in this standard.

   d. Once all lockout devices have been removed, the equipment or process may be restarted.

3. Temporary operation of locked-out source

   a. Make sure everyone is clear of the system.

   b. Make sure tools are clear.

   c. Remove lock(s).

   d. Energize the system and conduct check.

   e. Immediately de-energize the system and replace locks.

4. Unauthorized removal of locks and tags is prohibited. Use the following procedure for the supervisor or qualified person to remove the lock/tag when the employee is not available:

    a. Verify that the authorized employee is not on site and available to remove his or her own tag.

    b. Check that employees are not exposed to hazards.

    c. Verify that the equipment is safe to operate, tools have been removed, and guards have been replaced.

    d. Remain with affected equipment so that no one returns while equipment or process is being restarted.

    e. Remove lock/tag and energize equipment.

    f. Require that the affected employee knows the lockout device has been removed before he/she resumes work.

C. Training

1. Authorized employees must receive training prior to conducting LOTO activities.

2. Training must include the following:

    a. Purpose of lockout/tagout procedure.

    b. Hazards associated with different energy sources.

    c. Recognition of when to use LOTO procedures.

    d. Electrical lockout procedures.

    e. Valve lockout procedures.

    f. Compliance with lockout procedures.

    g. Discussion of specific procedures.

3. Awareness training of affected employees will be conducted to ensure that they understand the purpose of the LOTO procedures, the hazards associated with different energy sources, and their responsibilities under the LOTO program.

4. Retraining of authorized employees will be conducted and documented:

    a. When there is a change in

        i. Assignments.

        ii. Machines.

        iii. Equipment.

        iv. Processes.

    b. When there are new hazards or changes in the energy control procedure.

    c. When evaluation of lockout/tagout procedures reveals a need for additional training

5. The manager or safety supervisor should maintain a list of the names of all employees who are authorized to perform LOTO operations on specified machines or equipment.

5. Documentation Summary

The following documentation will be maintained in the project file:

A. Training records for authorized employees.

B. Lock and Tag Log (Attachment 023-1 NA).

C. Lockout/Tagout Permit (Attachment 023-2 NA).

6. Resources

A. American National Standards Institute (ANSI) Z244.1- 2003 – Control of Hazardous Energy – Lockout/Tagout and Alternative Methods

B. U.S. Occupational Safety and Health Administration (OSHA) Standard– Accident Prevention Signs and Tags – 29 Code of Federal Regulations (CFR) 1926.200

C. U.S. OSHA Standard – The Control of Hazardous Energy – 29 CFR 1910.147

D. U.S. OSHA Standard – Lockout and Tagging of Circuits – 29 CFR 1926.417

E. U.S. OSHA Technical Links – Lockout/Tagout

F. United Kingdom – 'Management of Health and Safety Work' Regulations

G. Attachment 023-1 NA – Lock and Tag Log

H. Attachment 023-2 NA – Lockout/Tagout Permit

7. Supplemental Information

A. Sample Tags

URS	Health, Safety and Environment **LOCK AND TAG LOG**	Attachment 023-1 NA Issue Date: June 1999 Revision 5: February 2009

Name of Qualified Person: _____ Date: _____

Job Name: _____ Job Location: _____

Date	Lockout Location	Authorized Employee	Activity Initiated	Activity Completed

URS	Health, Safety and Environment **LOCKOUT / TAGOUT PERMIT**	Attachment 023-2 NA Issue Date: June 1999 Revision 5: February 2009

Equipment/System to be Isolated: _____

Building: _____ **Floor:** _____ **Column:** _____

Other Location: _____

Purpose of Isolation: _____

Type of Isolation: _____

Authorized Employee: _____ **Date:** _____

Special Instructions: _____

Lockout/Tagout Performed: _____

Tag No.	Device ID	Bldg/Floor/Col.	Installed By	Removed By

Verification System Is Safe for Specified Work to Start

Authorized Employee: _____ Date: _____ Time: _____

Accountability **Accepts Protection**

Requesting Authority: _____ Date: _____ Time: _____

Accountability **Release Protection**

Requesting Authority: _____ Date: _____ Time: _____

Lockout/Tagout Removal Authorization

Authorized Employee: _____ Date: _____ Time: _____

This energy source has been LOCKED OUT

Only the individual who signed the reverse side may remove this lock/tag
Remarks: _____

_____
_____
_____
_____
_____
_____

LOCKED OUT

DO NOT OPERATE

This lock/tag may only be removed by:

Name _____

Dept _____

Expected Completion _____

URS SAFETY MANAGEMENT STANDARD

Medical Screening and Surveillance

1. Applicability

This standard applies to the operations of URS Corporation and its subsidiary companies for employees assigned to work environments where there is a potential for exposure to chemical, biological, and/or physical hazards.

Individuals will be selected for medical screening based on regulatory standards, project health and safety plan (HASP), assessments, the expected use of personal protective equipment (PPE), and client contract requirements.

2. Purpose and Scope

The purpose of this standard is to prevent occupational illness and injury by early identification of exposure-related health effects before they result in disease. Medical examinations will be performed to determine whether employees are capable of safely performing assigned tasks, to verify that protective equipment and controls are effectively providing protection, and to comply with government regulations. Included are provisions for emergency medical consultation and treatment.

3. Implementation

Implementation of this standard is the responsibility of the URS manager directing activities of the facility, site, or project location.

The Occupational Health Manager (OHM) is responsible for development and administration of this program in coordination with the URS Medical Service Provider (MSP). The OHM will maintain current injury and illness data, and participate with corporate, division, regional, country, or strategic business unit Health, Safety, and Environment (HSE) Managers in evaluation of this program. The MSP will provide occupational medicine oversight for the program and will approve medical surveillance protocols.

Locations in the United States and Canada will follow all requirements of this program.

International locations will follow sections B.1, 2, 3, 5, 6, 7, and 8; G.3; and H.1 of this program.

4. Requirements

A. Selection of program participants

1. The Medical Surveillance Evaluation (MSE) form – Attachment 024-2 NA provides the primary guidance for determining whether medical screening is required for an employee and the frequency of periodic exams. The MSE is to be completed by the employee and his or her supervisor at the time of hire for any employee who may work outside an office environment. At each annual performance review, the MSE is to be reviewed for accuracy. Other reviews are required whenever there is a change in job tasks.

2. Additional site- or project-specific biological monitoring or toxicological screening may be required in addition to this program's scheduled core exams. These medical tests will be specified by the project-specific HASP and will be authorized by the MSP on the exam appointment protocol. Note: See Section D.2 if the employee will have an initial assignment at a HAZWOPER site.

B. Types of medical screening and surveillance exams

1. A baseline or preassignment baseline exam will be conducted prior to the start of work assignments requiring medical surveillance.

2. Periodic exam schedules are established by the MSP using the following criteria:

   a. Employees performing the following types of work will receive annual exams: construction activities in the exclusion zone of HAZWOPER sites; field work activities in the exclusion zone of HAZWOPER sites for 30 or more days per year; or projects involving exposure to materials regulated by the Occupational Safety and Health Administration (OSHA) or Mine Safety and Health Administration (MSHA) at or above established action levels.

   b. Employees performing the following types of work will receive biennial exams: field work activities at HAZWOPER sites less than 30 days per year; waste disposal activities; non-HAZWOPER environmental sampling; or chemistry laboratory, pilot plant projects, or bench-scale operations for 30 or more days per year.

3. Employees currently participating in an examination program will receive exit exams when they leave their work assignment as identified in the Exit Exam Determination – Attachment 024-6 NA. In the event an employee declines the exit exam, the employee will be requested to sign a Waiver of Exit Medical Surveillance Exam – Attachment 024-7 NA.

4. Department of Transportation (DOT) exams will be conducted biennially when an employee is assigned to drive a vehicle with a gross weight rating of more than 10,000 pounds or a placarded vehicle of any size used to transport hazardous chemicals. DOT exam certification can be added to a routine baseline or periodic exam protocol when scheduling with the MSP.

5. When noise levels in the employee's work environment equal or exceed an 8-hour time-weighted average of 85 decibels as measured on the A-scale (dBA), annual audiograms will be performed. For employees involved in construction activities or construction management, enrollment in this program will be required if more than 50% of their time is spent in an active construction area and working in an area with posted noise hazards.

6. Individual radiation dose monitoring will be conducted as required by the site-specific HASP with approval by a Radiation Safety Officer. Personal dosimetry (film badges) is typically required; however, depending on the specific radiation hazard, additional monitoring or scans may be required.

7. To determine an employee's ability to wear a respirator, a medical evaluation will be performed before an employee is fit tested or assigned to wear a respirator.

8. Employees assigned to work in environments with airborne concentrations of asbestos fibers at or above the established action level (OSHA, MSHA, state, or other applicable regulations) will receive asbestos-specific baseline and annual exams. Exit exams will be performed if an exam has not been performed within the previous 6 months or if an employee has medical complaints related to potential asbestos exposure.

9. Blood sampling and monitoring for lead and other heavy metals will be conducted every 6 months until two consecutive blood

samples/analyses are acceptable. An employee with elevated heavy metal blood levels should be temporarily assigned to a task with minimal exposure, pending medical clearance. Sampling and monitoring will be performed every 2 weeks during the reassignment period. Employees will be notified of results within 5 days when levels are not acceptable. Medical Removal Protection benefits may apply in this situation.

10. Urine samples may be collected for some heavy metal exposures such as cadmium and mercury. Samples must be collected within 30 days of assignment to any task with potential for exposure to cadmium or other heavy metals. Medical monitoring results will be used to assess worker exposure and exposure control methods.

11. Medical monitoring will also be required to assess potential worker health risk to other chemical hazards, including polyaromatic hydrocarbons (PAHs), pesticides, benzene, chlorinated solvents, crystalline silica, and other chemical hazards as identified in prejob hazard analysis. The MSP will be consulted to determine necessary testing protocols and acceptance levels. The physician's opinion letter will be used to determine the worker's ability to perform the specified task and to wear PPE necessary to accomplish the task in a safe manner.

12. Skin exposures to hazardous chemicals with "Skin" notation will be evaluated case by case in consultation with the MSP. Allergic and hyper-sensitivity symptoms will be evaluated by the MSP as required.

C. Exam protocols

1. The Medical Screening and Surveillance Exam Protocol – Attachment 024-3 NA identifies the medical exam components of this program.

2. Evaluation will be confidential and provided during normal hours. Employees will be offered the opportunity to discuss the results of the evaluation with the MSP. All exam results are considered personal and confidential information, and will not be stored in any unsecured records not transmitted without the employee's permission.

D. Scheduling of exams

1. The Office or Project Manager, usually with assistance from the local HSE Representative, is responsible for contacting the MSP when baseline, exit, and project-specific exams are required. The MSP maintains an employee scheduling database for tracking periodic exams and will contact the employee for scheduling during the month the exam is due. These steps are detailed in the Medical Surveillance Exam Process – Attachment 024-4 NA.

2. Employees hired with an initial assignment to work at a HAZWOPER site whose work duties require passing a physical exam or who have an essential job function of wearing a respirator will receive a job offer contingent upon passing a preassignment baseline exam. See HAZWOPER and Respirator Preassignment Baseline Exam Protocol – Attachment 024-5 NA.

3. In the event of an urgent business need, a temporary clearance to begin work the day of the exam may be requested at the time a baseline exam is scheduled through the MSP. The temporary clearance will be issued by the local physician and will be good for up to 14 days or until the MSP physician's final clearance is received, whichever comes first.

4. If an exam becomes due during an employee's pregnancy, it is advised to defer the exam until after delivery and the employee returns to work from family/medical leave status.

E. Exam Follow-Up

1. Following each exam, the MSP will issue a physician's written opinion (Health Status Medical Report), which will include any medical restrictions and address the employee's ability to use personal protective equipment, to the HSE Representative. See Exam Follow-Up Procedures – Attachment 024-8 NA.

2. The MSP will mail the exam invoice to the Local Office HSE Representative, who will either approve the charge and forward the invoice to the accounts payable department for payment or forward the charge to the manager responsible for the employee for charge assignment and payment. (Medical exams that are part of this program are provided to URS employees at no cost to the employee.)

3. The MSP will mail a confidential letter detailing the results of the exam to the employee at his or her home address within 30 days of the exam date.

F. Medical Records

1. Medical records include records concerning an employee's health status that is made or maintained by a physician, nurse or other health care professional. Medical records are maintained and preserved in confidential, locked files in the custody of the MSP for at least the duration of employment plus 30 years. Only information regarding the employee's ability to perform the job assignment will be provided to company representatives.

2. Employees in medical monitoring programs are notified initially, and annually thereafter, of the existence, location and ability to access medical records maintained by the MSP. Upon request, each employee (or designated representative) will have access to the employee's medical record. Prior to the release of health information to the employee (or designated representative), a specific written consent must be signed by the employee. Records will be provided in a reasonable time and manner at no cost to the employee.

3. International records (excluding the United States and Canada) will be maintained in-country at the local clinic.

4. Projects that use local clinics or employer/client clinics may store records at that site, but at the termination of the project, all employee medical records must be transferred to long-term records retention or forwarded to WorkCare™.

5. Subcontractors and vendors are expected to maintain their own employee records and reports, but the employee physician's opinion letters will be available for inspection and verification of compliance.

6. If in the event, URS ceases operations, medical records will be transferred to the successor employer. If no successor employer is available, records will be transferred to the National Institute for Occupational Safety and Health.

G. Program Evaluation

1. The OHM and corporate, regional, country, or SBU HSE Managers will evaluate this program annually and as needed. Issues to review include program efficacy and efficiency, employee satisfaction, and cost-effectiveness.

2. The MSP will prepare an Annual Medical Trending Report specifying the number and types of exams performed and anonymous statistical exam results in group data format.

3. Each employee is mailed a Post-Exam Evaluation by the MSP. Employee feedback regarding the clinic, medical staff, and exam procedures are reviewed, and corrective actions are identified and taken as needed.

5. Documentation Summary

The following documentation will be maintained in the office / project file:

A. Medical Surveillance Evaluation.

B. Health Status Medical Report.

6. Resources

A. U.S. Occupational Safety and Health Administration (OSHA) Technical Links – Medical Screening/Surveillance

B. U.S. OSHA Publication 3162 – Screening and Surveillance: A Guide to OSHA Standards, 1999

C. SMS 065 – Injury Management

D. Attachment 024-1 NA – WorkCare™ Medical History Questionnaire

E. Attachment 024-2 NA – Medical Surveillance Evaluation

F. Attachment 024-3 NA – Medical Screening and Surveillance Exam Protocol

G. Attachment 024-4 NA – Medical Surveillance Exam Process

H. Attachment 024-5 NA – HAZWOPER and Respirator Preassignment Baseline Exam Protocol

I. Attachment 024-6 NA – Exit Exam Determination

J. Attachment 024-7 NA – Waiver of Exit Medical Surveillance Exam

K. Attachment 024-8 NA – Exam Follow-Up Procedures

URS SAFETY MANAGEMENT STANDARD

Noise and Hearing Conservation

1. Applicability

This standard applies to the operations of URS Corporation and its subsidiary companies where personnel may encounter noise exposures that may exceed 85 decibels, measured using an A-weighted scale (dBA), as an 8-hour time-weighted average (TWA).

2. Purpose and Scope

The purpose of this procedure is to protect employees from hazardous noise exposures and to prevent hearing loss.

3. Procedures

The associated implementing regional procedures for this standard are included as attachments:

SMS 026 NA – North America; Australia / New Zealand

SMS 026 INT – International Operations (including Europe, Asia, South America and Africa)

URS SAFETY MANAGEMENT STANDARD

Noise and Hearing Conservation

1. Applicability

This standard applies to the operations of URS Corporation and its subsidiary companies where personnel may encounter noise exposures that may exceed 85 decibels, measured using an A-weighted scale (dBA), as an 8-hour time-weighted average (TWA).

2. Purpose and Scope

The purpose of this procedure is to protect employees from hazardous noise exposures and to prevent hearing loss.

3. Implementation

Implementation of this procedure is the responsibility of the URS manager directing activities of the facility, site, or project location.

4. Requirements

A. General

1. The use of hearing protectors is required in any location where powered or motorized equipment or any other noise source could reasonably be expected to exceed 85 dBA. Whenever information indicates that any employee's exposure may equal or exceed an 8-hour TWA of 85 dBA, the project manager or location manager will be responsible for enforcing the proper use of hearing protectors.

2. Implement a hearing conservation program in accordance with 29 Code of Federal Regulations (CFR) 1910.95(c) when applicable. Work not applicable to 29 CFR 1910.95(c) will assess hazards of noise exposure on a task basis, and implement engineering or administrative controls to reduce employee noise exposure.

3. Hearing protectors will be used in the event that administrative or engineering controls are either not effective or not feasible, and the following criteria will be applicable to selection of hearing protection devices.

    a. Require that at least two types of hearing protectors are available to employees free of charge, and that the type of hearing protector is suitable to the task.

b. Require that hearing protectors are used in accordance with manufacturer's specifications to effectively protect hearing.

c. Evaluate the effectiveness of the hearing protectors chosen. The manufacturer's assigned noise reduction rating (NRR) for hearing protection devices can seldom be achieved in workplace conditions; therefore this rating must be attenuated for real world conditions and use. To do so, subtract 7 from the NRR of the protector provided by the manufacturer. Divide this result by 2, and then subtract the remained from the observed "A" scale sound level measurement collected in the employee's work area (see Section 4.B). If this number is below 85, the hearing protectors are adequate for use in the work area.

B. Noise Surveys

1. Noise surveys must be conducted in a manner that reasonably reflects the exposure of the affected employees. Surveys must be conducted under the supervision of a URS Health, Safety, and Environment (HSE) Representative.

2. Sound-level meters and audio dosimeters used to determine employee exposure to noise sources must be Type II (accurate to within +/- 2 dBA), operated in "slow" response, on the "A" scale, and be calibrated to factory guidelines (including periodic factory recalibration).

3. Attachment 026-1NA (Sound Level Survey) and Attachment 026-2NA (Noise Dosimetry Field Sheet) may be used to record noise surveys.

C. Noise Controls

Eliminate noise sources to the extent possible. Examples of controls that must be considered include:

1. Adding or replacing mufflers on motorized equipment.

2. Adding mufflers to air exhausts on pneumatic equipment.

3. Following equipment maintenance procedures to lubricate dry bearings and replace worn or broken components.

4. Isolating loud equipment with barriers.

5. Replacing loud equipment with newer and quieter models.

6. Using caution signs and Hearing Protection Required signs to designate noisy work areas.

7. Installing HPD-dispensing devices at the entrance to noisy work areas.

D. Audiometric Exams

1. Tests

a. Details on the medical surveillance program (including audiometric testing) are included in SMS 024 – Medical Screening and Surveillance.

b. Audiometric tests will be performed by a person meeting the requirements described in 29 CFR 1910.95(g)(3). Within 6 months of an employee's first exposure at or above the action level, a valid baseline audiogram will be established, against which subsequent audiograms can be compared. Testing to establish a baseline audiogram will be preceded by 14 hours without exposure to noise. Hearing protectors may be used as a substitute for the requirement that a baseline audiogram will be preceded by 14 hours without exposure to workplace noise. The medical surveillance provider will notify employees of the need to avoid high levels of non-occupational noise exposure during the 14-hour period immediately preceding the audiometric examination. For multi-year projects, an annual audiogram will be obtained for each employee exposed at or above an 8-hour time-weighted average of 85 decibels.

c. Each employee's annual audiogram will be compared to that employee's baseline audiogram to determine if the audiogram is valid, and if there is a standard threshold shift (STS). A standard threshold shift is a change in hearing threshold relative to the baseline audiogram of an average of 10 dB or more at 2000, 3000, and 4000 hertz (Hz) in either ear. If the annual audiogram shows that an employee has suffered an STS, the employer will obtain a retest within 30 days, and consider the results in assessing an STS as the annual audiogram. The audiologist, otolaryngologist, or physician will review problem audiograms, and will determine whether there is a need for further evaluation. If an STS has occurred, the medical surveillance provider will notify the employee within 21 days of the determination.

E. Standard Threshold Shifts

If an employee's test results show a confirmed STS, their hearing protection will be evaluated and refitted, and a medical evaluation may be required.

F. Training

Verify that each employee who must work in a noisy environment is current on required Hearing Conservation Training. At a minimum, training shall be conducted before initial assignment and annually. Training must include the following topics:

1. The effects of noise on hearing.
2. The purpose of hearing protectors.
3. The advantages and disadvantages of various types of hearing protectors.
4. The attenuation of various types of hearing protection.
5. The selection, fitting, care, and use of hearing protectors.
6. The purpose of audiometric testing.
7. An explanation of the audiometric testing procedure.

5. Documentation Summary

The following documentation will be maintained:

A. Noise surveys, when applicable.

B. Training records.

C. Audiometric tests (must be maintained by the Company's medical record retention vendor (e.g., WorkCare)).

6. Resources

A. U.S. Occupational Safety and Health Administration (OSHA) Standard – Occupational Noise Exposure – 29 CFR 1910.95

B. U.S. OSHA Construction Standard – Occupational Noise Exposure – 29 CFR 1926.52 and 1926.101

C. U.S. MSHA – Occupational Noise Exposure 30 CFR 62

D. U.S. FRA – Occupational Noise Exposure 49 CFR 227

E. U.S. OSHA Technical Links – Noise and Hearing Conservation

F. American Industrial Hygiene Association: Protect Yourself from Noise-Induced Hearing Loss

G. National Hearing Conservation Association web site

H. SMS 024 – Medical Screening and Surveillance

I. Attachment 026-1NA – Sound Level Survey

J. Attachment 026-2NA – Noise Dosimetry Field Sheet

URS	Health, Safety and Environment **SOUND LEVEL SURVEY**	Attachment 026-1 NA Issue Date: July 2000 Revision 7: March 2012

Location: _____ **Date:** _____

Conducted By: _____

Sound Level Meter: _____ **Serial #:** _____

Calibrator Model: _____ **Serial #** _____ **Class:** ☐ **1** ☐ **2**

Battery Check Completed: ☐ **Date of Factory Calibration:** _____

Test No.	Description Location/Equipment	Distance	dBA	Hearing Protection Required?		Comments
				Yes	No	
				☐	☐	
				☐	☐	
				☐	☐	
				☐	☐	
				☐	☐	
				☐	☐	
				☐	☐	
				☐	☐	
				☐	☐	
				☐	☐	
				☐	☐	
				☐	☐	
				☐	☐	
				☐	☐	
				☐	☐	
				☐	☐	
				☐	☐	
				☐	☐	

Drawing of Equipment or Work Layout

Reference Numbers refer to the Test Numbers on Page 1

URS	Health, Safety and Environment **NOISE DOSIMETRY FIELD SHEET**	Attachment 026-2 NA Issue Date: July 2000 Revision 7: March 2012

Sample Identification

Sample #: _____ Date: _____

Employee Monitored: _____ Employee #: _____

Job: _____ Location: _____

Dosimeter Information

Model: _____ Serial # _____

Criterion Level (in dBA): _____ Threshold (in dBA): _____ Exchange Rate (in dBA): _____

Calibration (in dBA): Initial _____ Final _____

Weighting: Fast ☐ Slow ☐

Calibrator Information

Model: _____ Serial #: _____ Class ☐ 1 ☐ 2

Battery Check Completed: ☐ Date of Factory Calibration: _____

Sample Information

Time On: _____ Time Off: _____ Total Run Time (in min): _____

Time Weighted Average (in dBA): _____ %Dose: _____ Est. %Dose: _____

Average Sound Level (L_{avg}): _____ Peak Sound Level (L_{pk}): _____

Maximum Sound Level (L_{max}): _____ Minimum Sound Level (L_{min}): _____

Workplace Conditions

Scheduled Hours per Shift: _____ Operations: Normal? ☐ Abnormal? ☐

Explain: _____

_____

Hearing Protection: Type _____ % of Time Worn _____

Work Description/Comments

_____

_____

_____

Sampled By: _____

URS SAFETY MANAGEMENT STANDARD

Ladders

1. Applicability

This standard applies to the operations of URS Corporation and its subsidiary companies.

2. Purpose and Scope

The purpose of this standard is to ensure the safe use and proper construction, inspection, and maintenance of ladders at office and project locations.

3. Procedures

The associated implementing regional procedures for this standard are included as attachments:

SMS 028 NA – North America; Australia / New Zealand

SMS 028 INT – International Operations (including Europe, Asia, South America and Africa)

URS SAFETY MANAGEMENT STANDARD

Ladders

1. Applicability

This standard applies to URS Corporation and its subsidiary companies where ladders are used.

2. Purpose and Scope

The purpose of this standard is to ensure the safe use and proper construction, inspection, and maintenance of ladders at office and project locations.

3. Implementation

Implementation of this standard is the responsibility of the URS manager directing activities of the facility, site, or project location.

4. Requirements

A. General

1. Use ladders to access various elevations. They will be used only for the purpose for which they are designed, and will not normally be used as a working platform.

2. Provide ladders for safe access to all elevations where permanent or temporary stairways or suitable ramps or runways are not provided.

3. Never use ladders with broken or missing rungs or steps, broken or split side rails, or other faulty or defective construction. When ladders with such defects are discovered, immediately tag and withdraw from service.

4. Place ladder feet on a stable and level footing and keep the area around the top and bottom of the ladder clear.

5. Do not place ladders in passageways, doorways, driveways, or any location where they may be displaced by other work activities, unless protected by barricades or guards.

6. Ensure ladders have uniform step spacing; step spacing should not exceed 12 inches (30 centimeters).

7. Ensure the side rails, cleats, and/or rungs of ladders are kept clear and free of lines, hoses, cables, wires, oil, mud, ice, grease, and debris.

8. Employees must face ladders at all times while ascending, descending, or while working from the ladder.

    a. Three points of contact (i.e., two hands + one foot or two feet + one hand) must be maintained at all times when either ascending or descending a ladder.

    b. Grasp the ladder rungs with hands while climbing and not the side rails.

9. Tie, block, or otherwise secure straight ladders while in use to prevent their being displaced or moved.

10. Never use metal ladders for electrical work or where they or the user may contact electrical conductors.

11. Ladders must be equipped with non-skid safety feet.

12. Ladders must not be loaded beyond the maximum intended load for which they were built, or beyond the manufacturer's rated capacity.

13. When not in use, ladders will be stored under suitable cover and secured against movement. When stored horizontally, both ends and the middle will be supported to prevent sagging and warping of rails.

14. Use only ladders approved by the applicable government or standards organization.

15. Aluminum ladders may not be used in the vicinity of electrical energy sources.

B. Straight and Extension Manufactured Ladders

1. Position straight and extension ladders at such a pitch that the horizontal distance from the top support to the foot of the ladder is about one-quarter of the working length of the ladder (1 foot (30 centimeters) out for every 4 feet (1.2 meters) up).

2. Do not use ladders in a horizontal position as platforms, runways, or scaffolds.

3. Extend the side rails at least 3 feet (0.9 meter) above the landing, except in those instances where such an extension would in itself

produce a hazard. When this is not practical, install grab rails at the landing elevation, which provide a secure grip.

4. Ensure the side rails have a secure footing. The resting point for the side rails should be rigid and have ample strength to support the applied load. The top of the ladder should be secured to prevent movement.

5. When using two section wood or metal extension ladders, the two sections must have a minimum overlap of 3 feet (0.9 meter) for working lengths up to 36 feet (11 meters), 4 feet (1.2 meters) for working lengths up to 48 feet (14.6 meters), and 5 feet (1.5 meters) for working lengths up to 60 feet (18.3 meters).

6. When using two section fiberglass extension ladders, the two sections must have a minimum overlap of 3 feet (0.9 meter) for working lengths up to 32 feet (9.8 meters), and 4 feet (1.2 meters) for working lengths up to 36 feet (11 meters).

7. Do not permit anyone to stand on the top three rungs of a straight or extension ladder.

8. Do not take sections of extension ladders apart and use separately.

9. The lashing of ladders together to increase the length of the ladder is prohibited.

10. Do not paint ladders in a manner that hides the grain structure, deterioration, or defects (suitable transparent preservative materials may be used).

C. Stepladders

1. Always fully open and lock side braces when using stepladders.

2. Use straight or extension manufactured or job-built ladders for accessing elevations. Stepladders are meant to be used as temporary elevated working platforms only.

3. Do not place planks on the top of or on any steps of stepladders.

4. Never stand on the top two steps of a stepladder.

5. Never climb on the rear side of a stepladder.

6. Require that all four feet of the ladder have an even, solid footing.

D. Job-Built Ladders

1. Job-built ladders must be constructed for intended use. If a ladder is to provide the only means of access or exit from a working area for 25 or more employees, or simultaneous two-way traffic is expected, a double-cleated ladder shall be installed.

2. Double-cleated ladders must not exceed 24 feet (7.3 meters) in length.

3. The width of single-cleat ladders will be at least 15 inches (38 cm), but not more than 20 inches (50 cm), between rails at the top.

4. Side rails will be parallel or flared top to bottom by not more than ¼ inch (0.6 cm) for each 2 feet (0.6 meters) of length.

5. It is preferable that side rails be continuous. If splicing is necessary to attain the required length, however, the splice must develop the full strength of a continuous side rail of the same length.

6. Two-inch (5 cm) by 4-inch (10 cm) lumber will be used for side rails of single cleat ladders up to 16 feet (4.9 meters) long; 2-inch (5 cm) by 6 inch (15 cm) lumber will be used for single-cleat ladders from 16 feet (4.9 meters) to 30 feet (9.1 meters) in length.

7. Two inch (5 cm) by 4-inch (10 cm) lumber will be used for side and middle rails of double-cleat ladders up to 12 feet (3.7 meters) in length; 2-inch (5 cm) by 6-inch (15 cm) lumber for double-cleat ladders from 12 (3.7 meters) to 24 feet (7.3 meters) in length.

8. Wood cleats up to and including 20 inches (50 cm) wide will be ¾ inches (1.9 cm) in thickness and 3 inches (7.5 cm) in width. Wood cleats over 20 inches (50 cm) wide will be ¾" in (1.9 cm) thickness and 3¾ inches (9.5 cm) in width.

9. Inset cleats into the edges of the side rails ½ inch (1.2 cm), or use filler blocks on the rails between the cleats. Secure the cleats to each rail with three 10d common wire nails or other fasteners of equivalent strength. Uniformly space cleats at 12 inches (30.5 cm) top-to-top.

10. Additional information on job-built ladders is provided in Supplemental Information A.

E. Training

Train each employee in the safe and proper use of ladders, including the following:

1. Do not carry materials while ascending or descending the ladder; use a hand line or hoisting equipment.
2. Face the ladder when ascending or descending.
3. Maintain three points of contact at all times when ascending or descending.
4. Position the ladder at the proper pitch.
5. Secure the top and bottom of the ladder to prevent displacement.
6. Require proper extension (3 feet/0.9 m) above landing.
7. Never overreach; work only within an arm's length of the ladder.
8. Allow only one person on a ladder at a time.

E. Inspections

1. Assign a competent person to perform all ladder inspections.
2. Conduct thorough periodic inspections (monthly recommended) of all ladders to identify cracks, broken rungs, and deterioration. Ladders found to be in an unsafe condition must be removed from the workplace immediately. When immediate removal is not possible, the ladder must be conspicuously tagged "DANGER – DO NOT USE" until such time as removal is possible.
3. Inspect each ladder for unsafe conditions before each use. Ensure that the marking system remains legible between inspections. Ladders with illegible marking systems will be considered unsafe and will be removed from service.
4. Inspect ladders for any occurrence that could affect their safe use (e.g., ladder falls, damage by external forces, etc.).

5. Documentation Summary

The following information will be maintained in the project file:

1. Site safety briefings regarding ladder use and inspection.
2. Records of ladders taken out of service and/or removed from the site.

6. Resources

A. U.S. Occupational Safety and Health Administration (OSHA) Construction Standard – Ladder – 29 CFR 1926, Subpart X

B. U.S. OSHA Standard – Walking-Working Surfaces – 29 Code of Federal Regulations (CFR) 1910, Subpart D

C. ANSI A.14.1-2000, Wood Ladders Safety Requirements

D. ANSI A.14.2-2000, Portable Metal Ladders Safety Requirements

E. ANSI A.14.5-1982, Reinforced Plastic Ladders Safety Requirements

7. Supplemental Information

A. Construction Specifications for Job-Built Ladders

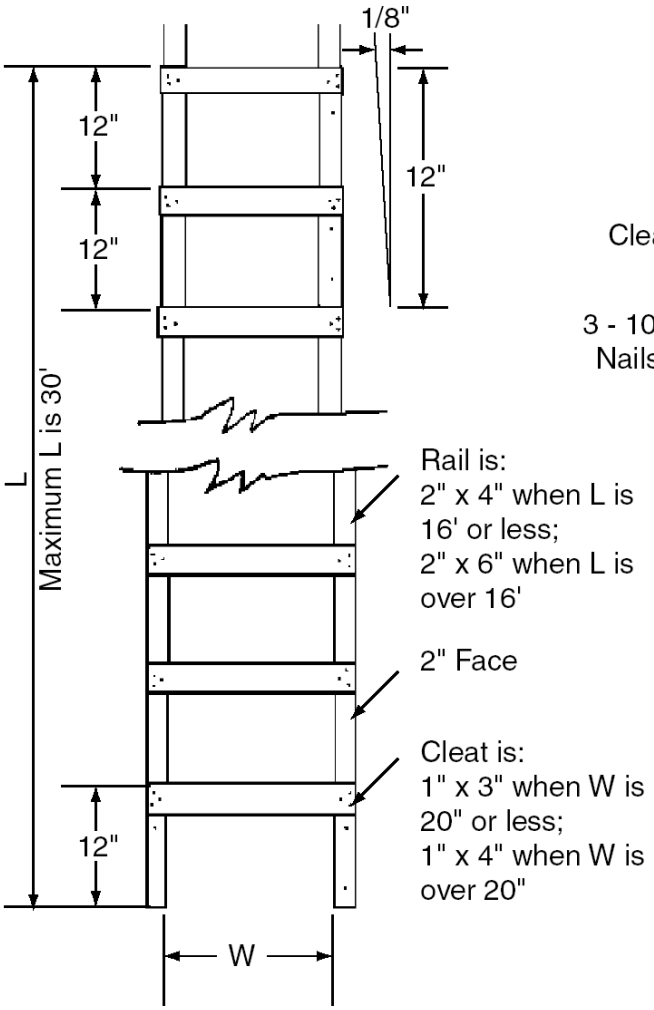

Alternate Section Details

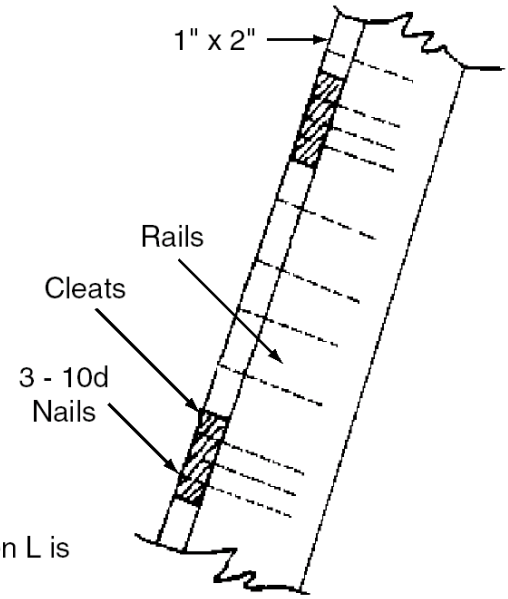

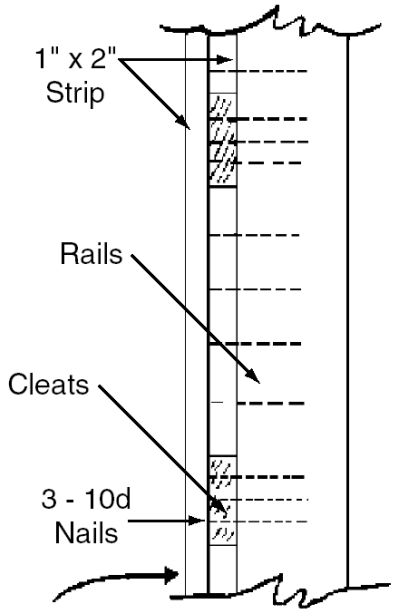

Notes:

(A) All materials to be thoroughly seasoned and straight grained and free from shakes, checks, knots, decay etc.
(B) Rails to be made from Eastern or Sitka Spruce or equivalent.
(C) Cleats to be made of White Ash, Oak, Hickory or equivalent.
(D) All lumber sizes shown are nominal.
(E) These drawings and specifications are for made-on-the-job ladders and are not intended to apply to manufactured ladders.

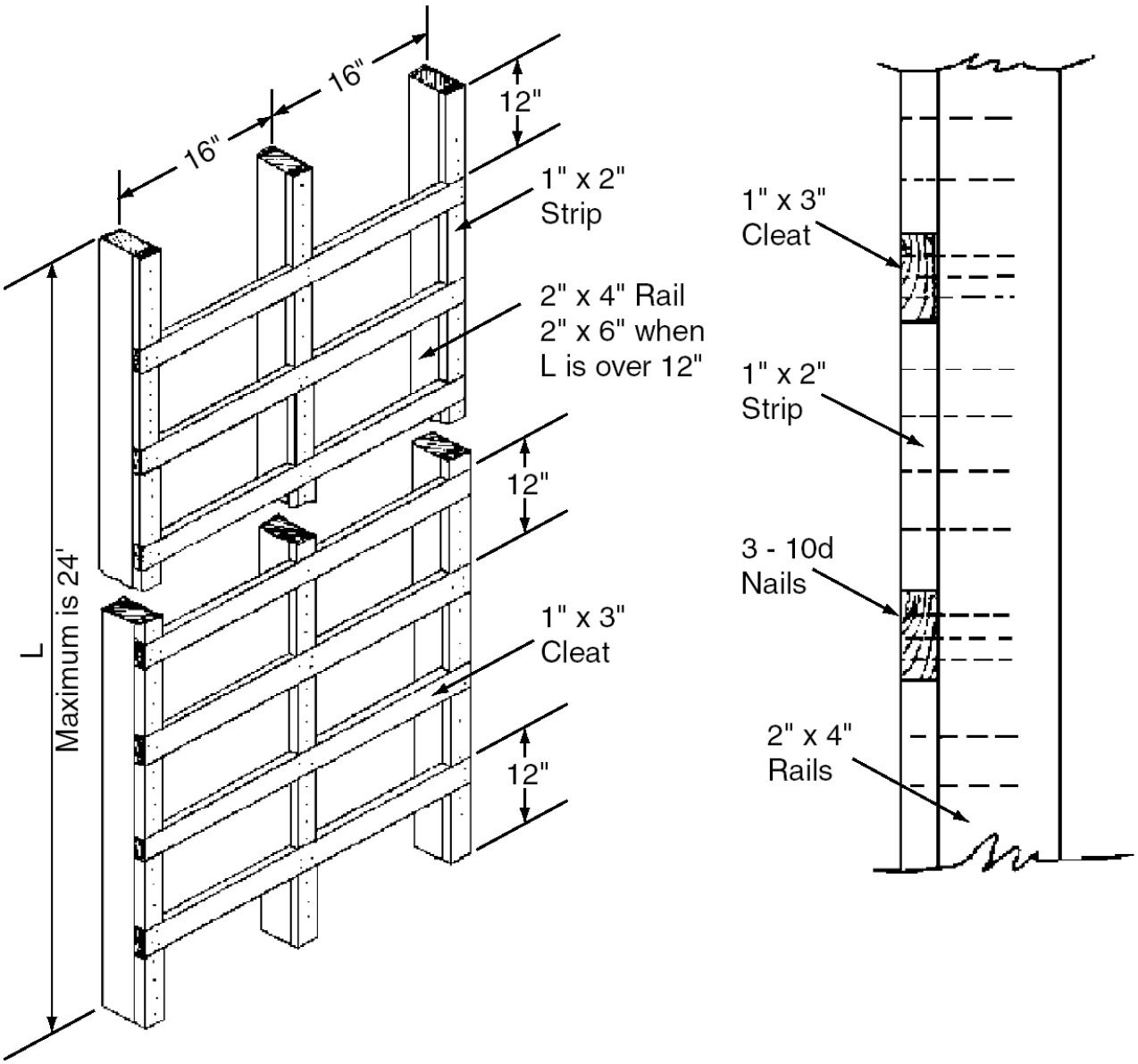

Notes:

(A) All materials to be thoroughly seasoned and straight grained and free from shakes, checks, knots, decay etc.

(B) Rails to be made from Eastern or Sitka Spruce or equivalent.

(C) Cleats to be made of White Ash, Oak, Hickory or equivalent.

(D) All lumber sizes shown are nominal.

(E) These drawings and specifications are for made-on-the-job ladders and are not intended to apply to manufactured ladders.

URS Safety Management Standard

Personal Protective Equipment

1. Applicability

This standard applies to all operations of URS Corporation and its subsidiary companies.

2. Purpose and Scope

The purpose of this standard is to provide information on recognizing those conditions that require PPE. PPE is designed to protect the employee from health and safety hazards that cannot be practically removed from the work environment.

3. Procedures

The associated implementing regional procedures for this standard are included as attachments:

SMS 029 NA – North America

SMS 029 INT- International Operations (including Europe, Asia, South America and Africa)

SMS AP6-029 – Australia / New Zealand

URS Safety Management Standard

Personal Protective Equipment

1. Applicability

This standard applies to all operations of URS Corporation and its subsidiary companies where the use of personal protective equipment (PPE) is anticipated.

2. Purpose and Scope

The purpose of this standard is to provide information on recognizing those conditions that require PPE. PPE is designed to protect the employee from health and safety hazards that cannot be practically removed from the work environment.

3. Implementation

Implementation of this standard is the responsibility of the URS manager directing activities of the facility, site, or project location.

4. Requirements

A. Perform hazard assessments for those work activities that are likely to require the use of PPE.

   1. Use Attachment 029-1 NA to perform the assessment.

   2. Reevaluate completed hazard assessments when job conditions or duties change.

B. Eliminate the hazards identified in Attachment 029-1 NA, if possible, through engineering or administrative controls.

C. Select PPE that will protect employees if hazards cannot be controlled or eliminated.

   1. See Attachment 029-1 NA for recommended PPE.

   2. Review Material Safety Data Sheets for chemicals used for PPE recommendations.

   3. If needed, consult with the applicable safety representative for assistance in selecting PPE.

D. Provide required PPE to employees free of charge (excluding, in some instances, components of standard work attire such as steel-toed boots and prescription safety glasses), assuring proper fit and providing a choice

if more than one type of PPE is available. Where applicable, the local policy (office or project) regarding reimbursement for PPE will prevail.

E. Provide the employees with the appropriate PPE whenever a hazard is recognized and PPE is required. However, when PPE is not required and the employee elects to wear his or her own PPE, the manager directing activities must ensure that the employee is properly trained in the fitting, donning, doffing, cleaning, and maintenance of his or her employee-owned equipment.

F. Make employees of aware that they are responsible for PPE maintenance, care, and proper use. Employees must inform their supervisors when a need arises to use PPE for which the employee has not received training, or when a condition exists where adequate PPE is not available.

G. Conduct and document employee training.

1. Train all employees who are required to wear PPE.

2. Require that training includes:

   a. When PPE is to be worn.

   b. The type of PPE necessary for the task to be completed.

   c. How to properly don, doff, adjust, and wear PPE.

   d. Limitations of PPE.

   e. Proper care, maintenance, useful life and disposal of PPE.

3. Conduct training before PPE is assigned.

4. Provide refresher training when:

   a. The workplace changes, rendering previous PPE and training obsolete.

   b. New types of PPE are assigned to the worker.

   c. The worker cannot demonstrate competency in PPE use.

5. Keep written records of the employees trained and type of training provided, including the date of training.

H. PPE Specific Information

1. Head Protection

a. Use hard hats in areas where there is the possible danger of head injury from the impact of falling or flying objects, striking against objects, electrical shock and/or burns, or any combination of these hazards. Hard hats will be worn when required by site safety procedures, client/site requirements, or when posted as an entry requirement.

b. Adjust the hard hat suspension to fit the wearer and to keep the shell a minimum of 1.25 inches (3.2 cm) above the wearer's head. Do not store materials in the suspension. Cold weather liners and perspiration control bands may be utilized within the hart hat unless specifically excluded by the manufacturer.

c. Wear hard hats in the forward position unless written verification and instructions from the hard hat manufacturer indicate your hard hat model has been tested and found to be compliant when worn backwards.

d. Type 1 helmets are designed to protect the employee from impact and penetration caused by objects hitting the top of the head; Type II helmets extend this protection to the sides of the head as well.

e. Class G (General) helmets provide protection against impact, penetration, and limited electrical hazards up to 2,200 volts. Class E (Electrical) helmets meet the same criteria, but electrical protection is increased to 20,000 volts. Class C (Conductive) helmets only provide impact and penetration protection.

f. Do not use bump caps as protection against head injury, except when the only potential hazard is striking against objects and the use has been approved a Business, Country, Group, Regional Business Unit (RBU), or Strategic Business Unit (SBU) Health, Safety and Environment Manager.

g. Do not alter hard hats in a way that will downgrade their efficiency. Typical prohibited alterations include painting,

drilling holes in shell, application of metal jewelry, etc. Replace hats with these alterations or with excessive scratches.

h. Wear integral chinstraps when working in high-wind conditions or near helicopters.

i. Inspect hard hats before use and remove from service if any of the following are observed: cracking, tearing, fraying, chalking, and flaking.

j. Remove hard hats and their components from service and replace as recommended by the manufacturer. Hard hats must be replaced after no more than 5 years.

2. Hearing Protection

a. Provide hearing protection in any location where powered or motorized equipment or any other noise source could reasonably be expected to exceed 85 dBA. Each task in the work area will be evaluated for potential worker noise exposure as required.

b. Review SMS 026 – Noise and Hearing Conservation – for additional information.

3. Eye and Face Protection

a. Use eye and/or face protection when machines or operations create the risk of eye and/or face injuries due to physical, chemical, and/or radiation sources. Safety glasses will be worn when required by site safety procedures, client/site requirements, or when posted as an entry requirement.

b. Provide safety glasses that can be worn over corrective spectacles for employees whose vision requires the use of corrective lenses. Employees will consult with the applicable safety representative or project managers for policies on reimbursement for prescription safety glasses.

c. Do not use of sunglasses in place of required safety glasses. Heavily tinted safety glasses will only be used in outdoor areas with suitable lighting. Colored or lightly tinted or gradient lenses may be used indoors as appropriate to the work conditions.

d. Tasks involving potential projectiles (e.g., chipping, grinding and cutting) will require face shields over safety goggles. Tasks requiring power washing or handling corrosive chemicals will require a face shield over safety goggles. For welding tasks, refer to Supplemental Information B for lens selection criteria.

e. Consult Supplemental Information A for additional information on types of eye and face protection and their various uses.

4. Hand Protection

a. Wear gloves when the hands are exposed to hazards such as, but not limited to, chemical absorption, cuts or lacerations, abrasions, punctures, chemical burns, thermal burns, vibration, or temperature extremes.

b. Gloves must always be provided to workers for tasks with potential hand hazards.

c. Identify hand hazards during job or task hazard analysis. A supply of appropriate gloves in various sizes must be provided to workers assigned to work on that task.

d. Inspect chemical gloves for degradation or tears prior to use. Do not remove chemical gloves from the work area if it is visibly contaminated. Chemical gloves may be decontaminated or disposed of according to specified procedures. In some cases, inner disposable chemical gloves (e.g., nitrile) will be required for protection of hands during removal of contaminated gloves.

e. Select chemical-resistant gloves using manufacturer's hazard-based selection programs or other published guides that identify compatibility of glove material with chemical hazards. Selection must also consider physical requirements of the task with regard to puncture resistance and need for flexibility and dexterity in performing the task.

f. Review SMS 064 – Hand Safety – for additional information.

5. Foot Protection

   a. Wear appropriate specialized protective footwear in the following environments:

      i. Using harmful corrosive substances or processes.

      ii. Having a high probability of puncture or crushing injuries.

      iii. Performing regular assembly or disassembly of heavy system components.

      iv. Working in wet conditions.

      v. Working in extreme cold.

      vi. Working around exposed electrical wires or connections.

      vii. When using hand-operated compactors, snow blowers, pressure washers, or steam cleaners.

      viii. Other activities or areas as designated by supervisors or safety personnel.

   b. Employees assigned to field projects who are not required to wear specified protective footwear (e.g., steel-toed boots, metatarsal protection, rubber boots, insulated boots, etc.) will wear substantial leather, high-sided work boots. Shoes (leather, canvas, tennis, deck, or other types of material), sandals, high-heeled shoes, etc., are not allowed on field project sites.

I. Maintain Protective Equipment

1. Check PPE for damage, cracks, and wear prior to each use. Replace or repair equipment not found in good condition.

2. Decontaminate non-disposable PPE with appropriate cleaner, as necessary, to prevent degradation of the equipment. Staff will remove any non-impermeable PPE/clothing that becomes contaminated with hazardous substances. These instructions are reiterated in the emergency decontamination procedures in the Health and Safety Plans.

J. Periodically inspect worksites where employees are using PPE using Attachment 029-2 NA. Regularity of inspections should be determined by the project manager and/or site safety representative.

5. Documentation Summary

The following information will be maintained in the project file:

A. Completed Hazard Assessment Certification Forms (Attachment 029-1 NA).

B. Completed Personal Protective Equipment Inspection Sheet (Attachment 029-2 NA).

C. Documentation of employee training.

6. Resources

A. U.S. Occupational Safety and Health Administration (OSHA) Standards – Personal Protective Equipment – 29 Code of Federal Regulations (CFR)1910, Subpart I

B. U.S. OSHA Construction Standard - Personal Protective Equipment – 29 CFR 1926 Subpart E

C. U.S. OSHA Technical Links – Personal Protective Equipment

D. American National Standards Institute – ANSI Z89.1-2003, Protective Headwear

E. American National Standards Institute – ANSI Z87.1-2003 – Eye and Face Protection

F. American National Standards Institute /International Safety Equipment Association, ANSI/ISEA 107 - 2004 – Standard for High-Visibility Safety Apparel

G. American National Standards Institute – ANSI Z41-1991, Protective Footwear Requirements, American Society for Testing and Materials, ASTM F-2414-2005, Standard Test Methods for Foot Protection, ASTM F-2413-2005, Standard Specification for Performance Requirements for Protective Footwear

H. American National Standards Institute/International Safety Equipment Association (ANSI/ISEA) – 105-2011 – American National Standard for Hand Protection Selection Criteria"

I. *Quick Selection Guide to Chemical Protective Clothing,* K Forsberg and S.Z. Mansdorf, Wiley Interscience, 2002

J. Best Manufacturing Co. http://www.bestglove.com/. Information on chemical resistant gloves.

K. SMS 040 – Fall Protection

L. SMS 026 – Noise and Hearing Conservation

M. SMS 064 – Hand Safety

N. Attachment 029-1 NA – Hazard Assessment Form

O. Attachment 029-2 NA – Personal Protective Equipment Inspection Form

7. Supplemental Information

A. Welding Lens Selector

B. Traffic Control Class Guidelines and Scenarios

URS	Health, Safety and Environment **HAZARD ASSESSMENT CERTIFICATION FORM**	Attachment 029-1 NA Issue Date: July 2000 Revision 9: March 2012

Location: _____ **Job No.:** _____

Date: _____ **Assessment conducted by:** _____

Specific tasks performed at this location: _____

If any of the indicated hazards are present, eliminate the hazard or use the indicated PPE.

Overhead Hazards

1.	Suspended/elevated loads, beams, or objects that could fall or strike head	☐ **Yes**	☐ **No**	Hard hat, ANSI Z89, Class G, E or C
2.	Flying objects that could strike head	☐ **Yes**	☐ **No**	Hard hat, ANSI Z89, Class G, E or C
3.	Energized wires or equipment that could strike head	☐ **Yes**	☐ **No**	Hard hat, ANZI Z89, Class G or E (dependent on potential voltage)
4.	Sharp objects or corners at head level	☐ **Yes**	☐ **No**	Hard hat, ANSI Z89, Class G, E or C

Eye Hazards

5.	Chemical splashes or irritating mists	☐ **Yes**	☐ **No**	See Supplemental Information A for additional information
6.	Excessive dust	☐ **Yes**	☐ **No**	Safety glasses or goggles
7.	Smoke and/or fumes	☐ **Yes**	☐ **No**	Safety goggles
8.	Welding operations	☐ **Yes**	☐ **No**	Welding goggles; See Supplemental Information A and B for additional information
9.	Lasers/optical radiation	☐ **Yes**	☐ **No**	Have URS HSE Representative assist you in proper selection
10.	Projectiles	☐ **Yes**	☐ **No**	Safety goggles plus face shield
11.	Sawing, cutting, chipping, and/or grinding	☐ **Yes**	☐ **No**	Safety goggles plus face shield; See Supplemental Information A for additional information

Face Hazards

12.	Chemical splashes or irritating mists	☐ **Yes**	☐ **No**	Safety goggles; See Supplemental Information A for more information; add face shield if irritating or corrosive
13.	Welding operations	☐ **Yes**	☐ **No**	Welding goggles or welding helmet; see Supplemental Information A and B for additional information
14.	Projectiles	☐ **Yes**	☐ **No**	Safety goggles plus face shield

Hand Hazards

15.	Chemical exposure	☐ **Yes**	☐ **No**	Use chemical-resistant gloves specific to hazard; consult MSDS, chemical hazard guide, or HSE Representative
16.	Sharp edges, splinters, etc.	☐ **Yes**	☐ **No**	Leather or Kevlar gloves
17.	Temperature extremes – heat	☐ **Yes**	☐ **No**	Leather gloves, welder's gloves, hot mill gloves

If any of the indicated hazards are present, eliminate the hazard or use the indicated PPE.

18.	Temperature extremes – cold	☐ **Yes**	☐ **No**	Insulated gloves
19.	Blood, fungus, biological agents	☐ **Yes**	☐ **No**	Nitrile gloves
20.	Exposure to live electrical currents	☐ **Yes**	☐ **No**	Electrical gloves; consult HSE representative
21.	Sharp tools, machine parts, etc.	☐ **Yes**	☐ **No**	Leather or Kevlar gloves
22.	Material handling	☐ **Yes**	☐ **No**	Leather gloves

Foot Hazards

23.	Heavy materials (greater than 50 pounds) handled by employees	☐ **Yes**	☐ **No**	Safety shoes or boots
24.	Potential to crush whole foot	☐ **Yes**	☐ **No**	Safety shoes or boots with metatarsal guard
25.	Sharp edges or points (puncture risk)	☐ **Yes**	☐ **No**	Safety shoes or boots
26.	Exposure to electrical hazards	☐ **Yes**	☐ **No**	Safety shoes or boots with: Conductive - Protects the wearer in an environment where the accumulation of static electricity on the body is a hazard. Static dissipative - Reduces the accumulation of excess static electricity by conducting body charge to ground while maintaining a sufficiently high level of resistance. Electrical hazard - Provides a secondary source of protection against accidental contact with live electrical circuits, electrically energized conductors, parts or apparatus, and is manufactured with non-conductive electrical shock resistant soles and heals.
27.	Slippery conditions	☐ **Yes**	☐ **No**	Rubber-soled boots or grips
28.	Chemical contamination	☐ **Yes**	☐ **No**	Rubber, PVC, or polyurethane boots or boot covers with puncture and protective toe if task required
29.	Wet conditions	☐ **Yes**	☐ **No**	Rubber boots or boot covers
30.	Construction/demolition	☐ **Yes**	☐ **No**	Safety boots with metatarsal guard if foot-crushing hazard exists

Fall Hazards

31.	Elevations above 4 feet (general industry) or 6 feet (construction) without guardrails	☐ **Yes**	☐ **No**	ANSI A-10.14 Type 1 full-body harness
32.	Suspended scaffolds, boatswain's chairs, float scaffolds, or suspended staging	☐ **Yes**	☐ **No**	ANSI A-10.14 Type 1 full-body harness
33.	Working in trees	☐ **Yes**	☐ **No**	ANSI A-10.14 Type 1 full-body harness
34.	Working in vehicle-mounted elevating work platforms (e.g., bucket trucks, aerial lifts)	☐ **Yes**	☐ **No**	ANSI A-10.14 Type 1 full-body harness

Water Hazards

35.	Working on or above water where a risk of drowning exist	☐ **Yes**	☐ **No**	U.S. Coast Guard approved personal floatation device; Type I, II, or III

Excessive Heat or Flame

36.	Full body chemical protective clothing in temperatures greater than 80 °F	☐ **Yes**	☐ **No**	Cooling vest
37.	Work around molten metal or flame	☐ **Yes**	☐ **No**	Nomex or heat reflective clothing
38.	Welding activities	☐ **Yes**	☐ **No**	Welding leathers for those areas that are exposed to flame, spark, or molten metal

Respiratory Hazards

39.	Airborne particulates, gases, vapors, or mists in excess of established exposure limits	☐ **Yes**	☐ **No**	Refer to SMS 042 or URS HSE Representative for respirator selection guidance

Excessive Noise

40.	Exposure to noise	☐ **Yes**	☐ **No**	Ear plugs, muffs or both

Body and Leg Protection

41.	Chemical exposure	☐ **Yes**	☐ **No**	Contact URS HSE Representative for assistance in proper selection
42.	Using chainsaw, cutting brush	☐ **Yes**	☐ **No**	Chainsaw chaps
43.	Exposure to snakes	☐ **Yes**	☐ **No**	Snake chaps
44.	Exposure to vehicle traffic or heavy equipment	☐ **Yes**	☐ **No**	See SMS 032 and SMS 029 NA – Supplemental Information C for additional guidance

I certify that the above inspection was performed to the best of my knowledge and ability, based on the hazards present on: _____

Name _____ Signature _____

URS	Health, Safety and Environment **PERSONAL PROTECTIVE EQUIPMENT INSPECTION SHEET**	Attachment 029-2 NA Issue Date: July 2000 Revision 9: March 2012

Name of Inspector _____ **Date Inspected** _____

	Hard Hats	
1.	The brim or shell does not show signs of exposure and excessive wear, loss of surface gloss, chalking, or flaking.	☐ **Yes** ☐ **No**
2.	Suspension system in hard hat does not show signs of deterioration, including cracking, tearing, or fraying.	☐ **Yes** ☐ **No**
3.	The brim or shell is not cracked, perforated, or deformed.	☐ **Yes** ☐ **No**
4.	Employees use hard hats in marked areas.	☐ **Yes** ☐ **No**
5.	Areas requiring hard hat usage are marked.	☐ **Yes** ☐ **No**
	Safety Shoes	
6.	Safety shoes used by employees do not show signs of excessive wear.	☐ **Yes** ☐ **No**
7.	Areas requiring safety shoes are marked.	☐ **Yes** ☐ **No**
	Work Gloves	
8.	Gloves are available and worn when needed.	☐ **Yes** ☐ **No**
9.	Gloves are appropriate for the task.	☐ **Yes** ☐ **No**
10.	Gloves do not show signs of excessive wear such as cracks, scrapes, or lacerations, thinning or discoloration, or break-through to the skin.	☐ **Yes** ☐ **No**
	Protective Clothing	
11.	Protective clothing (including traffic control apparel) is worn by employees when required.	☐ **Yes** ☐ **No**
	Hearing Protection	
12.	Noise hazard areas are posted.	☐ **Yes** ☐ **No**
13.	Employees are using earplugs or muffs when using noise producing equipment or working in posted noise hazard areas.	☐ **Yes** ☐ **No**
	Safety Glasses/Goggles	
14.	Eye hazard areas are marked or posted.	☐ **Yes** ☐ **No**
15.	Employees use safety glasses/goggles when working in eye hazard areas or working with equipment that produces an eye hazard.	☐ **Yes** ☐ **No**
16.	Face shields are used when required and worn over safety goggles.	☐ **Yes** ☐ **No**

REMARKS ***(All "No" answers indicate a hazard which needs to be fixed.)***

_____

_____

_____

_____

_____

Operations	Electrode Size (1/32”)	Arc Current	Minimum Protective Shade
Shielded metal arc welding (SMAW)	Less than 3	Less than 60	7
SMAW	3 – 5	60 – 160	8
SMAW	5 – 8	160 – 250	10
SMAW	More than 8	250 – 550	11
Gas metal arc welding and flux cored arc welding		Less than 60	7
Gas metal arc welding and flux cored arc welding		60 - 160	10
Gas metal arc welding and flux cored arc welding		160 – 250	10
Gas metal arc welding and flux cored arc welding		250 - 500	10
Gas tungsten arc welding		Less than 50	8
Gas tungsten arc welding		50 – 150	8
Gas tungsten arc welding		150 - 500	10
Air carbon arc cutting	(light)	Less than 500	10
Air carbon arc cutting	(heavy)	500 – 1000	11
Gas tungsten arc welding		Less than 20	8
Gas tungsten arc welding		20 – 100	8
Gas tungsten arc welding		100 – 400	10
Gas tungsten arc welding		400 – 800	11
Plasma arc cutting	(light)	Less than 300	8
Plasma arc cutting	(medium)	300 – 400	9
Plasma arc cutting	(heavy)	400 -800	10
Torch blazing			3
Torch soldering			2
Carbon arc welding			14
Gas welding			5 – 6
Oxygen cutting			3 - 5

A. Class 1 Safety Apparel

1. Class 1 safety apparel provides the minimum amount of required material to differentiate the wearer from the work environment.
2. At a minimum, this shall include 217 square inches (in^2), or 0.14 square meters (m^2), of fluorescent yellow-green, orange-red, or red background materials combined with 155 in^2 (0.10 m^2) retro-reflective material. As an alternative, the apparel can have 310 in^2 (0.20 m^2) of combined-performance material (i.e., materials that are both retro-reflective and fluorescent).
3. Class 1 safety apparel typically consists of a sleeveless traffic vest with retro-reflective bands no less than 0.98 inches (25 mm) in width.
4. Those occupational activities under which Class 1 safety apparel is typically used:
    a. Permit full and undivided attention to approaching traffic;
    b. Provide ample separation of the pedestrian worker from conflicting vehicle traffic; and
    c. Permit optimum conspicuity in backgrounds that are not complex with vehicle and moving equipment speeds not exceeding 25 miles per hour (mph), or 40 kilometers per hour (kph).
5. Examples of pedestrian workers who could work in these situations may include:
    a. Workers directing vehicle operators to parking/service locations;
    b. Workers exposed to the hazards of warehouse equipment traffic;
    c. Roadside “right-of-way” or sidewalk maintenance workers; and
    d. Delivery vehicle drivers.

B. Class 2 Safety Apparel

1. Class 2 safety apparel provides superior visibility for the wearers by the additional coverage of the torso and is more conspicuous than Class 1.
2. At a minimum, this shall include 775 in^2 (0.50 m^2) of fluorescent yellow-green, orange-red, or red background materials combined with 201 in^2 (0.13 m^2) retro-reflective material. Combined-performance materials may not be used without background materials in Class 2.
3. Class 2 safety apparel typically consists of a full-torso sleeveless traffic vest with retro-reflective bands no less than 1.38 inches (35 mm) in width.
4. Those occupational activities under which Class 2 safety apparel is typically used:
    a. Greater visibility is desired during inclement weather conditions;
    b. Complex backgrounds are present;
    c. Employees are performing tasks which divert attention from approaching vehicle traffic;

d. Work activities take place in close proximity to vehicle traffic; and

e. Vehicle and moving equipment speeds exceed 25 mph (40 kph).

5. Examples of pedestrian workers who could work in these situations may include:

   a. Roadway construction workers;

   b. Utility workers;

   c. Survey crews;

   d. Railway workers;

   e. Forestry workers;

   f. Parking and/or toll gate personnel;

   g. Airport baggage handlers/ground crew;

   h. Emergency response personnel;

   i. Law enforcement personnel; and

   j. Accident site investigators.

C. Class 3 Safety Apparel

1. Class 3 safety apparel offers greater visibility to the wearer in both complex backgrounds and through a full range of body movements. Visibility is enhanced beyond Class 2 by the enhancement of background and reflective materials to the arms and/or legs.

2. At a minimum, this shall include 1240 in^2 (0.80 m^2) of fluorescent yellow-green, orange-red, or red background materials combined with 310 in^2 (0.20 m^2) retro-reflective material. Combined-performance materials may not be used without background materials in Class 3.

3. Class 3 safety apparel typically consists of a coveralls, jumpsuits, long or short-sleeved jackets, or long-sleeved shirts with retro-reflective bands no less than 1.97 inches (50 mm) in width. A sleeveless garment or vest alone shall not be considered Class 3 apparel.

4. Those occupational activities under which Class 3 safety apparel is typically used:

   a. Workers are exposed to significantly high vehicle speeds and/or reduced sight distances (note that several sources have interpreted the vehicle speed requirements as 50 mph (80 kph) or more);

   b. The worker and vehicle operator have high task loads, clearly placing the worker in danger; or

   c. The wearer must be conspicuous through a full range of body motions at a minimum of 1280 feet (390 m) and must be identifiable as a person.

5. Examples of pedestrian workers who could work in these situations may include:

   a. Roadway construction personnel;

   b. Utility workers;

c. Survey crews;

d. Emergency response personnel; and

e. Flagging crews.

D. Class E Safety Apparel

1. Class E apparel includes trousers or shorts which are part of a Class 3 apparel ensemble. Frequently a Class 2 vest is paired with Class E trousers, creating an overall ensemble which meets Class 3 apparel requirements. Class E garments are not intended to be worn without Class 2 or 3 garments.
2. At a minimum, Class E trousers shall have 465 in^2 (0.30 m^2) of fluorescent yellow-green, orange-red, or red background materials combined with 108 in^2 (0.07 m^2) retro-reflective material. Retro-reflective material shall encircle each leg (360° of visibility) and be placed not less than 1.97 inches (50 mm) above the bottom leg of the trouser.
3. At a minimum, Class E shorts shall have 465 in^2 (0.30 m^2) of fluorescent yellow-green, orange-red, or red background materials combined with 108 in^2 (0.07 m^2) retro-reflective material. Retro-reflective material shall encircle each leg.

E. Headwear

1. Headwear is considered an important accessory and compliments the overall visibility of the wearer. High-visibility headwear enhances visibility to the head of a moving worker in daylight and helps define the shape of the human form during nighttime exposures.
2. At a minimum, high-visibility headwear shall have 78 in^2 (0.05 m^2) of fluorescent yellow-green, orange-red, or red background materials combined with 10 in^2 (0.0065 m^2) retro-reflective material. As an alternative, the headwear can have 78 in^2 (0.05 m^2) of combined-performance material.

URS SAFETY MANAGEMENT STANDARD

Utility Clearances and Isolation

1. Applicability

This standard applies to the operations of URS Corporation and its subsidiary companies.

2. Purpose and Scope

The primary purpose of this standard is to establish operating requirements that will permit employees to work safely in the vicinity of electrical, natural gas, fuel, water, and other utility systems and installations. The secondary purpose is to prevent economic damage to utility systems from operations associated with project-related activities.

3. Procedures

The associated implementing regional procedures for this standard are included as attachments:

SMS 034 NA – North America

SMS 034 INT – International Operations (including Europe, Asia, South America and Africa)

SMS AP7-034 – Australia / New Zealand

URS SAFETY MANAGEMENT STANDARD

Utility Clearances and Isolation

1. Applicability

This standard applies to URS Corporation and its subsidiary companies where personnel may encounter subsurface or overhead utilities.

2. Purpose and Scope

Many field activities are conducted near aboveground and underground utilities. The primary purpose of this standard is to establish operating requirements that will permit employees to work safely in the vicinity of electrical, natural gas, fuel, water, and other utility systems and installations. The secondary purpose is to prevent economic damage to utility systems from operations associated with project-related activities.

The term *utility clearance* includes the following:

A. The positive locating of utility systems in or near the work area.

B. A signed statement by an appropriate representative attesting to the location of underground utilities and/or the positive de-energizing (including lockout) and testing of electrical utilities.

In some cases, utility representatives may deem it appropriate or necessary to use insulating blankets to isolate a power line. This is an acceptable alternative to positive de-energizing; however, only utility representatives can make the determination.

"Contact" with overhead power lines is considered to occur when equipment is closer to power lines than permitted by the criteria in the table in Section 4.C.2.b. (See note for operations in the United Kingdom).

On-site utilities, including emergency shut-off locations, shall be depicted on a utility drawing or plot plan. Emergency shut-off locations shall be verified before work activities commence.

3. Implementation

Implementation of this standard is the responsibility of the URS manager directing activities of the facility, site, or project location.

4. Requirements

A. Time for Completion

Complete utility clearances prior to the start of any work in the area of the utility that could feasibly result in contact with or damage to that utility.

B. Local Regulations

Research local and state codes and regulations regarding utility locating and isolation requirements. Utility companies and locating services are among the appropriate resources.

C. Overhead Power Lines

1. Proximity to Power Lines

No work is to be conducted within 50 feet (15 meters) of overhead power lines without first contacting the utility company to determine the voltage of the system and the height (at the lowest point) of the line has been measured. No aspect of any piece of equipment is to be operated within 50 feet (15 meters) of overhead power lines without first making this determination.

An exclusion zone shall be created at ground level beneath and 50 feet (15 meters) perpendicular to the overhead power lines on each side. This exclusion zone shall be demarcated with visual indicators (e.g., signage, flagging, paint, cones). No equipment shall enter the exclusion zone without approval from URS site management.

2. Operations adjacent to overhead power lines are *prohibited* unless one of the following conditions is satisfied:

a. Power has been shut off, positive means (such as lockout) have been taken to prevent the lines from being energized, lines have been tested to confirm the outage, and the utility company has provided a signed certification of the outage.

b. The minimum clearance from energized overhead lines is presented in the following table, or the equipment will be repositioned and blocked so that no part, including cables, can come within the minimum clearances listed in the table.

Minimum Distances from Power Lines	
Nominal System (kilovolt, kV)	Minimum Required Distance
0–50	10 feet (3 meters)
51–100	12 feet (3.6 meters)
101–200	15 feet (4.6 meters)
201–300	20 feet (6.1 meters)
301–500	25 feet (7.6 meters)
501–750	35 feet (10.7 meters)
751–1000	45 feet (13.7 meters)

Note: For operations in the United Kingdom, the specific safe distance is determined by the utility company.

c. The power line(s) has been isolated through the use of insulating blankets, which have been properly placed by the utility. If insulating blankets are used, the utility will determine the minimum safe operating distance; get this determination in writing with the utility representative's signature.

3. All inquiries regarding electric utilities must be made in writing and a written confirmation of the outage/isolation must be received by the appropriate URS representative prior to the start of the task that may impact the utility.

D. Underground Utilities

1. Do not begin subsurface work (e.g., trenching, excavation, drilling, etc.) until a check for underground utilities and similar obstructions has been conducted. The use of as-built drawings must be confirmed with additional geophysical or other surveys. Attachment 034-1 NA may be used to verify all utilities have been located prior to performing subsurface work.

2. Contact utility companies or the state/regional utility protection service at least two (2) working days prior to excavation activities to advise them of the proposed work and to ask them to establish the location of the underground utility installations prior to the start of actual excavation. One Call utility location service is available throughout the United States by calling 811. Where these services are unavailable (e.g., private properties), contract with an independent utility locating service to perform an evaluation of subsurface utilities.

3. Obtain utility clearances for subsurface work on both public and private property. Clearances are to be in writing and signed by the party conducting the clearance.

4. Protect and preserve the markings of approximate locations of facilities until the markings are no longer required for safe and proper excavations. If the markings of utility locations are destroyed or removed before excavation commences or is completed, the URS representative must notify the utility company, utility protection service, or the utility locating service to inform them that the markings have been destroyed.

5. Do not conduct mechanical-assisted subsurface work (e.g., work using a powered drill rig, mechanical excavator, etc.) within five (5) feet (1.5 meters) of a confirmed or suspected utility or other subsurface structure. Confirm minimum distances for mechanical-assisted subsurface work with the utility owner, as distances beyond this five-foot minimum may be required.

6. Nondestructive clearance techniques (e.g., vacuum extraction or other hand clearing means) are required prior to drilling/excavating in higher risk locations, including chemical plants, retail service stations, or other locations with complex underground utility systems.

7. Subsurface work within five feet (1.5 meters) of a confirmed or suspected utility or other subsurface structure must be done by nondestructive clearing techniques to the point where the obstruction is visually located and exposed. Once the obstruction location is confirmed in this manner, mechanical-assisted work may begin.

8. Reference SMS 013 – Excavation Safety for additional information regarding subsurface operations.

E. Utility Strikes

1. Utility strikes (unplanned contact with utilities resulting in damage to the utility or its protective coating) shall be reported in accordance with SMS 049 – Injury/Illness/Incident Reporting & Notifications.

2. All damaged utilities shall be repaired by a qualified and/or licensed professional.

F. Training

Conduct a briefing for site employees regarding the hazards associated with working near the utilities and the means by which the operation will maintain a safe working environment. Detail the method used to isolate the utility and the hazards presented by breaching the isolation.

5. Documentation Summary

The following documentation will be maintained in the project file:

A. Documents requesting utility clearance.

B. Documents confirming utility clearance.

C. Training/briefing documentation of each isolation.

6. Resources

A. Utility Locating Services (typically under "Utility" in the Yellow Pages)

B. National Institute for Occupational Safety and Health (NIOSH) Alert – Preventing Electrocutions from Contact Between Cranes and Power Lines

C. One Call Utility Locating List

D. National Utility Locating Contractor's Association

E. Attachment 034-1 – Utility Clearance Checklist

F. SMS 013 – Excavation Safety

G. SMS 049 – Injury/Illness/Incident Reporting

URS	Health, Safety and Environment **UTILITY CLEARANCE CHECKLIST**	Attachment 034-1 NA Issue Date: June 1999 Revision 6: September 2011

Project Name:	Project Number:
Project Location:	Client Name:
URS Project Manager Name:	Date Completed:

For any item answered 'No', Project Manager approval required before work can proceed.	
Within the last 10 days, and not less than 72 hours from the initiation of the task, contacts were notified that the public utility locate service (One Call) was made.	☐ Yes ☐ No ☐ N/A
Available records have been referenced and a plot plan indicating the location of all underground utilities have been provided and are available for reference at the work site.	☐ Yes ☐ No ☐ N/A

Completed Site Walk Over With Site Personnel (site manager, property owner or tenant representative)			
Site Personnel Name:		Site Personnel Signature:	
Does Site Personnel have any additional information regarding site utilities?		☐ Yes ☐ No Comment:	
Building Utility Service Line Connections Identified:	☐ Yes ☐ No ☐ N/A	Cleared:	☐ Yes ☐ No ☐ N/A

Field Observations – Any ** responses must be explained in box below.	
Field walk completed and utilities identified on page 2 of this form are cleared?	☐ Yes ☐ No**
Apparent saw cuts or patches in concrete/pavement?	☐ Yes** ☐ No
Piping along building exterior? Identify purposed and layout.	☐ Yes** ☐ No ☐ N/A
Manholes, vault covers, drains, pipes present?	☐ Yes** ☐ No
Piping inside of manholes correlate to utility markings?	☐ Yes ☐ No** ☐ N/A
Clear line-of-sight (equipment/vehicles/snow not blocking view or potential utilities)?	☐ Yes ☐ No**
Work between potential utilities or manholes?	☐ Yes** ☐ No
Work areas clear of overhead utilities?	☐ Yes ☐ No**
All known utilities located on plot/site map for personnel to review?	☐ Yes ☐ No**
Explanations:	

Public Utility Locate (OneCall)			
Date Called:		Called By:	
Ticket Number:		Valid Until:	
Area Requested To Be Cleared:			

Private Utility Locate		
Company Performing Locate:		Date Completed:
Area(s) Requested To Be Cleared (including distance around marked locations):		
Method(s) Used (e.g., GPR, EM):		
Confirm Area(s) Cleared:		

URS	Health, Safety and Environment **UTILITY CLEARANCE CHECKLIST**	Attachment 034-1 NA Issue Date: June 1999 Revision 6: September 2011

OneCall Utilities			Field Observation
Utility	**Notified by**	**Comments**	**Marked** (mains and services)
Electric (Red)	☐ OneCall ☐ Other		☐ Yes ☐ No ☐ Above
Gas/Petroleum Pipeline (Yellow)	☐ OneCall ☐ Other		☐ Yes ☐ No
Sewer/Drainage (Green)	☐ OneCall ☐ Other		☐ Yes ☐ No
Water (Blue)	☐ OneCall ☐ Other		☐ Yes ☐ No
Communications (Orange)	☐ OneCall ☐ Other		☐ Yes ☐ No ☐ Above
Other	☐ OneCall ☐ Other		☐ Yes ☐ No ☐ Above

Utilities Not Identified By OneCall (Includes both Public and Private along with Regional and Site Utilities)			Field Observation
Utility (Colors may vary)	**Owner / Contact / Phone #**	**Notified**	**Marked**
Communications: (Orange) TV, computer, phone, cell towers, site communication, cameras, security, etc.		☐Yes ☐No	☐ Yes ☐ No ☐ Above
Electricity: (Red) Mains / Supplies / Interior / Exterior (signs, fuel pumps, low voltage security perimeters, gates, property light posts, equipment, substations, etc.)		☐Yes ☐No	☐ Yes ☐ No ☐ Above
Gas: (Yellow) Mains / Supplies / Equipment / Pipelines (Natural, Process, Oil, Crude, Refined (Gas, Diesel, Jet), etc.)		☐Yes ☐No	☐ Yes ☐ No ☐ Above
Steam (Yellow)		☐Yes ☐No	☐ Yes ☐ No ☐ Above
Structures: Possible horizontally installed facilities, vaults, basements, tunnels, sub-grade structures, foundations, overhead obstructions, etc.		☐Yes ☐No	☐ Yes ☐ No ☐ Above
UST Systems (Tanks / piping / electric)		☐Yes ☐No	☐ Yes ☐ No
Sewer: (Green) Sanitary, storm, combined, septic, drainage (parking, buildings, fields), irrigation		☐Yes ☐No	☐ Yes ☐ No
Water: (Blue) Process, Plant, potable, well, cooling, return/makeup, fire, sprinkler, landscape irrigation, reclaim (Purple) other		☐Yes ☐No	☐ Yes ☐ No ☐ Above
Other: Abandoned Lines, invisible dog fences, shopping cart perimeter monitoring, traffic lights		☐Yes ☐No	☐ Yes ☐ No ☐ Above

If subsurface work is within five feet (1.5 meters) of a confirmed or suspected utility or other subsurface structure, nondestructive clearing techniques (e.g., air knife, vacuum excavation, hand auger) must be completed to visually locate and expose the utility.	☐ Yes ☐ No ☐ N/A
Precautions have been taken to prevent contact with overhead or underground utilities.	☐ Yes ☐ No ☐ N/A

Printed Name of Person Completing Checklist:	Signature:

URS SAFETY MANAGEMENT STANDARD

Fall Protection

1. Applicability

This standard applies to operations of URS Corporation and its subsidiary companies.

2. Purpose and Scope

The purpose of this standard is to provide criteria for the recognition and control of fall hazards of 6 feet (2 meters) or greater in the construction, mining, and demolition industry, and 4 feet (1.2 meters) or greater in other industries (General Industry). The standard also addresses steep slope work where the work surface angle is greater than 30 degrees from horizontal.

3. Procedures

The associated implementing regional procedures for this standard are included as attachments:

SMS 040 NA – North America

SMS 040 INT – International Operations (including Europe, Asia, South America and Africa)

SMS AP7-040 – Australia / New Zealand

URS SAFETY MANAGEMENT STANDARD

Fall Protection

1. Applicability

This standard applies to operations of URS Corporation and its subsidiary companies where personnel could be exposed to fall hazards of 6 feet (2 meters) or greater in the construction, mining, and demolition industry, and 4 feet (1.2 meters) or greater in other industries (General Industry). The standard also addresses steep slope work where the work surface angle is greater than 30 degrees from horizontal.

2. Purpose and Scope

The purpose of this standard is to provide criteria for the recognition and control of fall hazards.

3. Implementation

Implementation of this standard is the responsibility of the URS manager directing activities of the facility, site, or project location.

4. Requirements

A. Fall Protection – General

1. A Qualified Person has a recognized degree or professional certificate and with extensive knowledge, training and experience in the fall protection and rescue field that is capable of designing, analyzing, evaluating and specifying fall protection systems. A Qualified Person will:

    a. Be properly trained by a competent authority and hold necessary credentials.

    b. Approve fall arrest attachment points.

    c. Approve fall arrest systems.

    d. Fulfill rescue plan requirements if external entities (e.g., fire department) are not used.

2. A person who is capable of identifying hazardous or dangerous conditions in the personal fall arrest system or any component thereof, as well as in their application and use with related equipment. A Competent Person will:

    a. Be properly trained by a competent authority.

b. Ensure that one or more fall protection or prevention systems outlined in this standard is provided at all locations where fall hazards exist.

c. Ensure that all personnel working with and around fall hazards and fall protection systems are properly trained.

d. Ensure that access controls to areas with fall hazards are effective.

e. Inspect fall protection equipment.

f. Approve fall protection plans.

g. Ensure that safety monitoring systems or warning line systems are properly implemented, with trained staff as monitors.

2. An Authorized User who will:

   a. Be properly trained by a competent authority.

   b. Conduct pre-use inspections of equipment.

   c. Understand and demonstrate proper use of the fall protection equipment.

   d. Acknowledge identified fall hazards in the workplace.

3. Fall hazards generally fall into three categories for URS employees;

   a. General Industry – application where fall hazards greater than 4 feet (1.2 meters) exist, including:

      i. Workers are conducting inspection of existing facilities not under construction

      ii. Working in environmental remediation activities where no construction activities are occurring

      iii. Working in manufacturing operations

      iv. Working in vehicle and aircraft maintenance, and repair operations

      v. Working in warehouses

vi. Working on towers, poles, or other elevated structures.

b. Construction/mining – These activities require fall protection when fall hazards exceed 6 feet (2 meters). Activities include maintenance, mining, demolition, renovation, and construction support inspections and surveying.

c. Steep Slope – Fall protection measures must be used whenever the slope angle exceeds 30 degrees from horizontal (note that this excludes roofing applications, which are covered under Construction activities). Activities include the inspection of dams, environmental surveys of timbered slopes, or other applications where traditional fall protection systems are impractical.

4. Fall hazards include, but are not limited to, excavations, highwalls, unprotected elevations, ladders, scaffolds, floor holes, wall openings, formwork, rebar tying, inspection of dams, working on top of vehicles, equipment, or airframes, working over operating machinery, working above hazardous substances, and all other locations and operations where potential fall hazards exist.

5. Fall hazards must be addressed by one of five means (for additional information, see Attachment 040-1 NA – Fall Protection Checklist):

   a. Elimination or substitution controls such as moving planned work to ground level or substitution of a process, sequence, or procedure so that employees are no longer exposed to a fall hazard;

   b. Passive fall protection such as isolating or separating employees from the fall hazard through the use of guardrails or covered floor openings;

   c. Fall restraint, which includes securing an employee to an anchor using a lanyard that is short enough to prevent the employee's center of mass from reaching the actual fall hazard;

   d. Fall arrest, which includes systems to stop an employee's fall after it has begun (e.g., personal fall arrest systems, safety nets, etc.);

e. Administrative controls, including safety observers, boundary markings (i.e., tape, cable, or barricades) located 6 feet (2 meters) or more from an exposed edge, and maintaining three-points of contact.

5. Note that in some places, the standards for fall protection are required at different elevations than specified in this standard. Where this is the case, the more conservative elevation will be used in defining when fall protection systems are required.

6. In each instance where employees are exposed to fall hazards and passive fall protection controls are impractical, a Fall Protection Plan must be developed to define a strategy to protect the employees. Attachment 040-3 – Fall Protection Plan Template may be used to develop a Fall Protection Plan. Fall Protection Plans must be approved by the Site/Location/Project Manager and Safety Manager prior to work commencing.

7. Where administrative controls are the only feasible method of fall protection, Attachment 040-3 NA - Fall Protection Plan Template and Attachment 040-4 NA – Alternative Fall Protection Permit should be used. Refer to Section I for additional information.

B. Training

1. Qualified Person training should include:

   a. Selection of fall protection systems and compatibility of systems.

   b. Designing anchorages or complex active fall protection systems.

   c. Determining fall clearances and swing fall or other impact forces.

2. Competent Person training should include:

   a. Background knowledge, including regulations and standards.

   b. Recognition and identification of fall hazards.

   c. Selection of abatement solutions, systems and compatibility of systems.

   d. Inspection and approval of personal protective equipment.

e. Development and application of system use and rescue procedures.

3. Authorized User training should be conducted by a Competent Person for each employee who may be exposed to falls. Training should include:

   a. The nature and location of fall hazards in the work area.

   b. The correct procedures for erecting, maintaining, disassembling, and inspecting the fall protection systems to be used.

   c. The correct procedure for conducting a pre-use inspection of fall protection equipment in accordance with manufacturer's recommendations.

   d. The use and operation of guardrail, personal fall arrest, safety net, warning line, and safety monitoring systems, controlled access zones, and other protection to be used.

   e. The role of each employee in the safety monitoring system, when used.

   f. The limitations on the use of mechanical equipment during the performance of roofing work on low-sloped roofs.

   g. The correct procedures for the handling and storage of equipment and materials and the erection of overhead protection.

   h. The role of employees in fall protection plans.

   i. The standards contained in 29 Code of Federal Regulations (CFR) 1926 Subpart M or other applicable regulations/standards.

2. Prepare a written certification record that includes the name of the employee trained, the date(s) of training, and the signature of the person who conducted the training.

3. Provide re-training when one of the following situations occur:

   a. Changes in the workplace render previous training obsolete.

b. Changes in the types of fall protection systems or equipment to be used render previous training obsolete.

c. Inadequacies in affected employee's knowledge or use of fall protection systems or equipment indicate that the employee has not retained the requisite understanding or skill.

C. Guardrail Systems

1. Guardrail systems are used in Construction, Mining, and General Industry activities. The guardrail requirements apply in these setting at different heights: 6 feet (2 meters) in construction; and 4 feet (1.2 meters) in general industry:

a. Provide guardrail systems, when feasible, at all locations where a fall hazard exists. Where guardrail systems are impractical, an alternative form of fall protection must be provided, as outlined elsewhere in this Standard.

b. Require that guardrail systems meet the following criteria:

i. Install toprails 42 inches (1.1 meters) above the walking/working surface capable of withstanding, without failure, a minimum force of 200 pounds (91 kilograms) in any outward or downward direction with no more than 3 inches (7.6 centimeters) of deflection.

ii. Install midrails 21 inches (53 centimeters) above the walking/working surface capable of withstanding, without failure, a minimum force of 150 pounds (68 kilograms) in any outward or downward direction.

iii. Space posts not more than 8 feet (2.5 meters) apart on centers.

c. Require that there are no openings more than 19 inches (48 centimeters) wide in any guardrail system.

d. Do not use plastic or steel banding as toprail or midrail.

e. Provide toprails and midrails of at least one-quarter inch (6 millimeters) nominal thickness or diameter, and smoothly surfaced to prevent cuts and punctures.

f. Erect guardrails on all sides when using guardrail systems around holes.

g. When guardrails are used around holes that are used for access, such as ladderways, provide a gate or offset the guardrail so that a person cannot walk directly into the hole.

h. When guardrails are used at hoisting areas, place a chain, gate, or removable guardrail section across the access point when hoisting operations are not taking place.

i. Provide guardrail systems at *all* locations above dangerous equipment, regardless of height above the danger.

j. Provide guardrails at all wall openings where the outside bottom edge of the opening is 6 feet (2 meters) or more above lower levels, and the inside bottom edge of the wall opening is less than 39 inches (1 meter) above the walking/working surface.

k. Erect guardrail systems on all unprotected sides or edges of ramps and runways when such systems are used.

l. Where wire rope is used for construction of guardrail systems:

    i. Ensure the wire rope used for construction of the guardrail system is a minimum of ¼ inch (0.6 centimeters) in diameter.

    ii. Flag the toprail with high-visibility material every 6 feet (2 meters).

    iii. Attach wire rope to existing structures, equipment, or other wire ropes using Crosby clips of the U-Bolt and saddle type. Examples of this can be found in SMS 041 – Rigging, and Supplemental Information C to SMS 041.

    iv. Never clip two straight lengths of wire rope together. Instead, form an eye in each length and connect the eyes together.

    v. Never use fewer than the number of clips recommended.

vi. Always use new clips; re-used clips will not develop the proper efficiency.

vii. Use a thimble when creating an eye to prevent the rope from wearing the eye, and to provide a safer connection.

viii. Check the tension of the rope an hour after installation. Retighten as necessary, and check for tightness at frequent intervals thereafter.

D. Personal Fall Arrest Systems (General Industry and Construction)

1. Provide and require the proper use of personal fall arrest systems on all unprotected elevations 6 feet (2 meters) or higher for Construction activities, and 4 feet (1.2 meters) or higher for General Industry applications. Where these systems are impractical, an alternative form of fall protection must be provided. Refer to Section I for additional information.

2. All aspects of personal fall protections systems must be designed, installed, and used under the supervision of a Competent Person.

3. Maintain a safety factor of at least 2 in all components of a personal fall protection system (i.e., the static strength of the system should be at least two times the maximum required arresting force).

4. *Safety belts (body belts) are prohibited as a means of fall protection, although they may have application as a positioning device.*

5. Use only full-body harnesses, shock-absorbing lanyards, lifelines, and anchorage points that meet the following criteria:

   a. Body harness design and construction must meet the specifications set forth in 29 CFR 1926.500-.503 (or equivalent) and ANSI Z359.1.

   b. All snaphooks must be of the locking type and must be able to withstand a force of 3,600 pounds (1,633 kilograms) in all directions of potential loading to the gate.

   c. All hardware must be dropforged or pressed steel with a corrosion-resistant finish. Surfaces must be smooth and free of sharp edges. D-rings and snaphooks must have a minimum tensile strength of 5,000 pounds (2,270 kilograms).

d. Ropes and webbing used in lanyards, lifelines, and body harnesses must be made of synthetic fibers.

e. The attachment point (D-ring) of a body harness should be located in the center of the wearer's back near shoulder level, or above the wearer's head. *Note that front-mounted D-rings are allowed if the personal fall arrest system is designed to restrict free fall distances to 2 feet (60 centimeters) or less and limit the maximum fall arrest loads to 900 pounds (410 kilograms) of force or less.*

f. Horizontal lifelines must be designed, installed, and used under the supervision of a Competent Person, and be capable of supporting at least 5,000 pounds (2,270 kilograms) of force per employee attached.

g. Lanyards and vertical lifelines must have a minimum breaking strength of 5,000 pounds (2,270 kilograms).

h. Self-retracting lifelines and lanyards that limit free-fall to 2 feet (60 centimeters) or less must be capable of sustaining a minimum tensile load of 3,000 pounds (1,360 kilograms) in the fully extended position.

i. Self-retracting lifelines and lanyards that do not limit free fall to 2 feet (60 centimeters) or less, ripstitch, and other shock-absorbing lanyards must be capable of sustaining a minimum tensile load of 5,000 pounds (2,270 kilograms) in the fully extended position.

j. Protect lifelines against being cut or abraded.

k. Anchorage points for personal fall protection systems must be independent of any anchorage point being used to support or suspend platforms and must have a static strength of at least 5,000 pounds (2,270 kilograms) per employee attached.

l. Anchorage points for work positioning systems (systems designed to support a worker on a vertical system while working with hands free) and rescue systems must have a static strength of at least 3,000 pounds (1,365 kilograms).

m. Anchorage points for worker restraint systems (systems designed to limit a worker's travel in such a manner that he/she cannot reach a fall hazard zone) must have a static

strength of at least 1,000 pounds (455 kilograms). Worker restraint systems are only to be used on walking or working surfaces with a slope of less than 18.4°.

n. Personal fall arrest systems, when stopping a fall, must:

   i. Limit arresting force on an employee to 1,800 pounds (820 kilograms) when used with a body harness;

   ii. Be rigged such that an employee can neither free fall more than 6 feet (1.8 meters) nor contact any lower level;

   iii. Bring an employee to a complete stop and limit maximum acceleration distance an employee travels to 3.5 feet (1.1 meters); and

   iv. Have sufficient strength to withstand twice the potential impact energy of an employee free-falling a distance of 6 feet (1.8 meters), or the free-fall distance permitted by the system, whichever is less.

6. Fall protection equipment and anchorages must be inspected at the beginning of each shift by an authorized person and at least once per year (or more frequently if required by manufacturer) by a competent person. The annual inspections must be documented and remain on file for the life of the equipment. Inspections may be documented using SMS 040-2 NA or the manufacturer's inspection checklist.

7. Require employees to be familiar with the fitting and donning of body harnesses; proper tie-off techniques; and suitable anchorage points.

8. Where feasible, tie-off points should be above the employee's shoulders to limit potential fall length.

9. Never tie off to guardrail systems or hoists.

10. Require employees to remain tied off 100 percent of the time at or above 6 feet (2 meters) for Construction applications, or above 4 feet (1.2 meters) for General Industry applications, by means of horizontal lifelines, vertical lifelines, a double-lanyard system, or other suitable means.

11. Remove from service any component of a personal fall protection system that has been subjected to impact loading, and do not use it again until it is inspected by a competent person, and determined to be undamaged and suitable for reuse.

12. Make provisions for the prompt rescue of personnel in the event of a fall, or require that employees are capable of self-rescuing team members. Prompt rescue means getting to the rescue subject within 6 minutes of the accidental fall. Methods of rescue will be addressed in the fall protection plan.

13. If an in-house rescue team is to be used, ensure team members are qualified, trained and equipped for the task. Develop action plans and instructions for the team, and provide them with the opportunity to simulate a rescue.

14. If an outside rescue team is to be used, ensure that a documented plan of approach is completed, and that written confirmation of the plan is provided by the rescue agency.

15. Provide separate vertical lifelines for each employee using a vertical lifeline. For lifeline use, 5/8-inch (16-millimeter) nylon rope is recommended.

16. Ensure each employee working from a swing scaffold, bosun's chair, or other suspended work platform is provided with a lifeline separate from the suspended work platform.

17. Protect lanyards and lifelines against cuts and abrasions. Where tools are used that have the potential to sever, abrade, or burn lanyards, lifelines, or safety straps, replace synthetic materials with wire rope or wire-cored manila rope of equal strength.

18. Use rope grabs to attach to vertical lifelines—never use knots.

E. Safety Net Systems (Construction Applications)

1. Provide safety net systems at locations where a fall hazard of 6 feet (2 meters) or greater exists, and other forms of fall protection are not feasible. Where safety net systems are impractical, an alternative form of fall protection as outlined elsewhere in this standard must be provided.

2. Require that safety net systems meet the criteria set forth in 29 CFR 1926.500 – 503.

3. Install safety nets as close as possible under the walking/working surface on which employees are working, but never more than 30 feet (9 meters) below this level.

4. Require that the potential fall area from the walking/working surface to the net is unobstructed.

5. Install safety nets with enough clearance under them to prevent contact with the surface or structures below when subjected to an impact force equal to the drop test specified below.

6. Extend the outer edge of the net 8 feet (2.5 meters) from the edge of the working surface when the vertical distance from the working level to the net is 5 feet (1.5 meters) or less.

7. Extend the outer edge of the net 10 feet (3 meters) from the edge of the working surface when the vertical distance from the working level to the net is 5 to 10 feet (1.5 to 3 meters).

8. Extend the outer edge of the net 13 feet (4 meters) from the edge of the working surface when the vertical distance from the working level to the net is greater than 10 feet (3 meters).

9. Conduct a drop test of the safety net after installation and before being used as a fall protection system; whenever relocated; after major repair; and at 6-month intervals if left in one place.

10. Conduct the drop test by dropping a 400 pound (180 kilograms) sandbag, 30 inches (76 centimeters) in diameter, into the net from at least 42 inches (107 centimeters) above the highest walking/working level at which employees are exposed to a fall.

11. Inspect safety nets at least once a week (and after any occurrence that could affect the integrity of the system) for wear, damage, and deterioration. Remove defective nets and components from service.

12. Remove all materials, scrap, equipment, and tools that have fallen into the net as soon as possible, but at least before the next work shift.

F. Hole Covers

1. Provide covers in roadways and vehicle aisles that are capable of supporting at least twice the maximum axle load of the largest vehicle expected to cross over the cover.

2. Provide walking/working surface hole covers that are capable of supporting at least twice the weight of employees, equipment, and materials that may be imposed on the cover at any one time.

3. Secure covers at the time of installation to prevent displacement by the wind, equipment, or employees.

4. Color code or mark all hole covers with the word "HOLE" or "COVER" to provide warning of the hazard.

G. Safety Monitoring Systems, Warning Line Systems, and Controlled Access Zones

1. These control measures must be approved by the Competent Person prior to performing any roofing, overhand bricklaying, leading edge, or other elevated work that may require the use of one or more of these systems.

H. Protection from Falling Objects (Construction Applications)

1. Install toe-boards along the edge of the overhead walking/working surface.

2. Require that toe-boards are a minimum of 3½ inches (9 centimeters) in height; that they are capable of withstanding at least 50 pounds (22 kilograms) of force applied in any downward or outward direction; and that there is no more than a ¼-inch (6-millimeter) clearance between the toe-board and the walking/working surface.

3. Install paneling or screening from the top of the toe-board to the top rail or mid-rail when tools, equipment, or materials are piled higher than the top of the toe-board.

4. Provide sidewalk sheds or canopies as appropriate. For additional information, see SMS 011 – Demolition.

I. Alternative Fall Protection Plans

1. When traditional fall protection systems (e.g., guardrails, harnesses) are impractical, a Safety Manager may authorize an Alternative method of Fall Protection. Typically, this is intended to include steep slope (>30 degrees from horizontal) work along graded roads, on the face of dams, on top of an aircraft on the flight line, and in other remote or inaccessible steep work areas. This may include rope access systems on vertical or nearly vertical

surfaces. This does not include roofing applications, because appropriate equipment and regulatory guidance exists in those cases.

2. A Fall Protection Plan must be developed using Attachment 040-3 NA – Fall Protection Plan Template. Fall Protection Plans must be approved by the appropriate the Site/Location/Project Manager and Safety Manager before work commences.

3. Fall Protection Plans involving administrative controls shall include an Alternative Fall Protection Permit (Attachment 040-4 NA), ensuring that the Authorized Users have identified all hazards (including environmental conditions), are accompanied by a safety observer, and are properly trained. Alternative Fall Protection Permits must be approved by a Competent Person. Alternative Fall Protection Permits shall not be authorized if environmental factors pose an increased risk (e.g., inclement weather/rain).

4. The Fall Protection Plan, must address the following areas thoroughly:

    a. Fall protection strategy and application.

    b. Protective system and equipment, in detail.

    c. Methods and procedures, including limitations of the system, and the required numbers of trained workers.

    d. Alternative Fall Protection Permit (Attachment 040-5 NA).

    e. Explanation of why more effective fall protection controls are impractical. Cost and convenience are inadequate justifications.

    f. Rescue capability and procedures.

    g. Training required, in detail, for all workers.

    h. Responsibilities of key personnel, including the supervisor.

    i. Controlled access zones.

    j. The use of motor vehicles as an anchoring point is prohibited.

k. The use of three-points of contact. Authorized users must be accompanied by a safety observer.

5. Documentation Summary

Place in the Project Safety Files:

A. Qualified Person Qualifications (if used)

B. Competent Person Qualifications

C. Authorized User/Employee Training Records

D. Fall Protection Plan

E. Alternative Fall Protection Permits

6. Resources

A. U.S. Occupational Safety and Health Administration (OSHA) Standard 29 CFR 1926, Subpart M – Fall Protection

B. U.S. OSHA Technical Links – Fall Protection

C. U.S. Mine Safety and Health Administration, 30 CFR 56.15000

D. U.K. – Construction (Health, Safety and Welfare) Regulations 1996

E. ANSI Z359 2012– Fall Protection Code

F. ANSI A10.11-1989 – Safety Nets Used During Construction, Repair, and Demolition Operations

G. ANSI 1264.1-1995 – Safety Requirements for Workplace Floor and Wall Openings, Stairs and Railing Systems

H. SMS 011 – Demolition

I. SMS 041 - Rigging

J. Attachment 040-1 NA – Fall Protection Checklist

K. Attachment 040-2 NA – Fall Protection PPE Checklist

L. Attachment 040-3 NA – Fall Protection Plan Template

M. Attachment 040-4 NA – Alternative Fall Protection Work Permit

URS	Health, Safety and Environment **FALL PROTECTION CHECKLIST**	Attachment 040-1 NA Issue Date: June 1999 Revision 7: March 2013

NOTE: Employees must review the requirements of this Fall Protection Checklist prior to starting work activities. This plan must be available at the work site during work activities.

JOB LOCATION/DESCRIPTION

1. **Fall hazard identified:**
   Identify all areas where fall hazards of at least 6 feet (2 meters) or more exist in construction areas, and at least 4 feet (1.2 meters) or more exist in other industries:

   ☐ Unprotected edge ☐ Floor openings ☐ Scaffold

   ☐ Ladder ☐ Stairway ☐ Wall Openings

   ☐ Other (list): _____

2. **Method of all protection to be provided:**
   Each method of fall protection requires approval of the Site Safety Representative.

   ☐ Guardrails ☐ Fall Arrest ☐ Fall Restraint

   ☐ Safety Nets ☐ Hole Covers ☐ Monitoring Systems

   ☐ Other (list): _____

3. **Describe the method(s) for assembly, maintenance, inspection, and disassembly of the fall protection system used:**

4. **Describe method(s) for handling, storing, and securing tools and materials:**

5. **Describe the method(s) for prompt, safe removal of injured workers:**
   ☐ Initiate fall rescue plan

   ☐ Initiate facility emergency response (911 or _____)

   ☐ Other (list) _____

Approved by: _____ _____
Superintendent Site Safety Representative

Date: _____

URS	Health, Safety and Environment **FALL PROTECTION PPE CHECKLIST**	Attachment 040-2 NA Issue Date: June 1999 Revision 7: March 2013

Name of Inspector: _____ **Date Inspected:** _____

	Check if OK	Comments
Training – Is each worker exposed to fall hazards properly trained by a competent person in hazard recognition, fall protection processes and equipment, and site-specific conditions?	☐	
Harness – Inspect the entire surface of webbing for damage. Beginning at one end, bend the webbing in an inverted "U." Holding the body-side of the belt toward you, grasp the belt with your hands 6 to 8 inches apart. This surface tension makes the damaged fibers or cuts easier to see. Watch for frayed edges, broken fibers, pulled stitches, cuts, burns, and chemical damage.	☐	
Buckles – Note any unusual wear, frayed or cut fiber, or distortion of the buckles. Inspect the buckle for distortion. The outer bars and center bars must be straight. Pay special attention to corners and attachment points of the center bar.	☐	
Straps – The tongue receives heavy wear from repeated buckling and unbuckling. Inspect for loose, distorted, or broken grommets. The webbing should not have any additional punched holes. Buckle tongues should be free of distortion in shape and motion. They should overlap the buckle frame and move freely back and forth in their socket. The roller should turn freely on the frame. Check for distortion or sharp edges.	☐	
Lanyards – General: **Snaps –** Inspect closely for hook and eye distortions, cracks, corrosion, or pitted surfaces. The keeper (latch) should seat into the nose without binding, and should not be distorted or obstructed. The keeper spring should exert sufficient force to firmly close the keeper. Keeper locks must prevent the keeper from opening when the keeper closes.	☐	
Thimbles – The thimble must be firmly seated in the eye of the splice, and the splice should have no loose or cut strands. The edges of the thimble must be free of sharp edges, distortion, or cracks.	☐	
Web Lanyard – While bending the webbing over a curved surface such as a pipe, observe each side of the webbed lanyard: this will reveal any cuts or breaks. Examine the webbing for swelling, discoloration, cracks, or burns. Observe closely for any breaks in the stitching.	☐	
Rope Lanyard – Rotation of the rope lanyard while inspecting from end to end will bring to light any fuzzy, worn, broken, or cut fibers. Weakened areas from extreme loads will appear as a noticeable change from the original diameter. The rope diameter should be uniform throughout, following a short break-in period. Make sure the rope has no knots tied in it. Knots can reduce the strength of the rope by up to 60 percent.	☐	
Shock-Absorbing Lanyard – Shock-absorbing lanyards should be examined as a web lanyard; however, also look for signs of deployment. If the lanyard shows signs of having been put under load (e.g., torn out stitching), remove it from service.	☐	
Hardware – Check "D" rings for distortion, cracks, breaks, and rough or sharp edges. The "D" ring should pivot freely. "D" ring back pads should also be inspected for damage.	☐	
Anchorage – Check that the anchor point is properly located above the work area; positioned to minimize swing in the event of a fall; and capable of supporting 5,000 pounds (2,270 kilograms) for each attached employee.	☐	

PURPOSE

This fall protection plan template may be used to meet industry standards and the requirements in SMS 040 NA where workers are exposed to fall hazards and passive fall protection systems (e.g., guardrails, safety nets, etc.) are impractical and/or only administrative controls are feasible for certain tasks. This plan must be approved by a regional/business unit Safety Manager, shall be readily available to all personnel, and shall be updated at least annually.

DESIGNATED PERSONNEL & DUTIES

Qualified Person(s)	
Qualified personnel may be necessary to: • Approve fall arrest attachment/anchorage points • Approve complex fall arrest systems • Fulfill rescue plan requirements if outside agencies are not used	
Names of Qualified Persons	**Job Classification/Job Title**
{If any, list the names of the Qualified Persons here.}	

Competent Person(s)	
• Supervises and ensures that all personnel working with and around fall hazards and fall protection systems are properly trained • Ensures that access to controls to areas with fall hazards are effective • Conducts documented inspections of fall protection equipment at least annually • Trained in accordance with SMS 040 NA	
Names of Competent Persons	**Job Classification/Job Title**
{List the names of Competent Persons here. These should include all Supervisors that oversee work that includes fall hazards and fall protection systems. These personnel should be adequately trained as Competent Persons per SMS 040 training requirements.}	

Authorized User(s)	
• Utilize fall protection systems and inspect all fall protection equipment prior to use • Trained in accordance with SMS 040 NA to understand the fall protection system and equipment, including proper use, inspection, and storage	
Names of Authorized Users	**Job Classification/Job Title**
{List the names of all Authorized Users here. This includes all personnel that work around fall hazards and use fall protection equipment/systems. Authorized Users must be adequately trained as Authorized Users per SMS 040 training requirements.}	

FALL HAZARD SURVEY

Conducting a fall hazard survey of your work areas is a critical component of this fall protection plan. Each fall hazard should be documented and assigned a risk level. Risk levels shall be determined by identifying both the severity and probability of the potential falls using the tables below.

SEVERITY LEVEL OF FALL HAZARD

To determine the severity level of a fall hazard, estimate the distance of the potential fall and determine if any objects could be struck during the fall. Consider other hazards such as working over water, impalement, moving vehicles or operating equipment in fall zone, use of high energy tools in tasks (e.g., high pressure air or water hoses), potential for chemical contamination (e.g., chemical or fuel loading or unloading. Document these on the task hazard analysis and then use the table below as a final determination of severity level.

Severity	
1	Simple, immediate treatment, first aid, or evaluation only. Temporary shutdown of equipment or operation to repair or replace a safety control device.
2	Medical treatment to prevent deterioration or to stabilize an injury such as sprains, contusions or abrasions without significant blood loss. Emergency shutdown of equipment or operation requiring management of change.
3	Urgent medical treatment, any surgery or breaks of bones or possible neck/head injury. Any incident which would trigger a regulatory agency inspection.
4	Partial disability or life changing event, or intensive care, or amputation of limb(s). Any incident requiring high angle rescue of worker(s) or extended rescue time.
5	Fatality or total permanent disability or multiple severe injuries from an incident. An incident requiring site emergency evacuation or a site-wide shut down.

PROBABILITY LEVEL OF FALL HAZARD

To determine the probability level of a fall hazard, consider the frequency of exposure, length of exposure, and the number of workers' exposed during work activities. Also consider any environmental factors such as inclement weather and slippery conditions that could greatly increase the probability of a fall. Use the table below as a final determination of probability level.

Probability	
1	Remote likelihood to happen/controls or conditions would prevent this outcome
2	Unlikely to happen/the environment and situation could not support this outcome
3	Likely to happen/it has been reported for similar activities
4	Very likely to happen/it has happened before

FALL PROTECTION SYSTEMS/CONTROLS

Passive and/or active fall protection systems (e.g., guardrails, personal fall arrest systems, warning line systems, etc.) shall be used whenever possible. In all instances where fall protection systems are impractical, alternative fall protection controls are required. Additional administrative controls may include, but are not limited to:

- Limiting or restricting work activities when other hazards create additional risk (e.g., inclement weather including lightning, ice/snow, high winds, or tripping hazards, or structurally unsound or unstable surfaces, or slippery surfaces or other structural hazards).
- Using a safety observer
- Maintaining three points of contact
- Providing adequate lighting

FALL HAZARD SURVEY REPORT

The table below should include all fall hazards in the work areas under this plan. Severity, probability, and total risk level should be determined for each.

Description of Task Involving Fall Hazard	**Location**	**Severity** (1-5)	**Probability** (1-4)	**Risk Level** $\frac{\text{Severity + Probability}}{2}$	**Fall Protection System/Controls** Use Red Text or Highlight use of Administrative Controls Only

Description of Task Involving Fall Hazard	Location	Severity (1-5)	Probability (1-4)	Risk Level Severity + Probability / 2	Fall Protection System/Controls Use Red Text or Highlight use of Administrative Controls Only

PROCEDURES

Alternative Fall Protection Work Permit

When work must be performed using administrative controls only as described in SMS 040 NA, a permit must be completed by the Authorized Users who will perform the work and approved by a Competent Person that is a Manager or Supervisor. Attachment 040-5 NA - Alternative Fall Protection Permit may be used for this purpose.

Permit Approval:

Written approval for permits must be from a Manager or Supervisor who is a fall protection Competent Person. All authorized permit approvers must be listed in the table below:

List of Authorized Permit Approvers		
Names	**Job Classification/Job Title**	**Trained as a Competent Person?**
		Yes ☐
		Yes ☐
		Yes ☐
		Yes ☐

Posting of Permits:

Permits must be posted where the work is taking place. If that is not feasible, the permit should be posted in the closest possible area to where the work is taking place.

Permit Duration & Expiration:

Permits expire at the end of the shift on which it was issued and a new permit must be issued and approved for work that continues into the next shift.

System Use and Design Limitations Procedures

Each fall protection system used must have system-specific procedures developed and made readily available to the user, preferably near the point of use. These procedures should include:

- The assembly, maintenance, pre-use inspection (including manufacturer's recommendations), and disassembly of the fall protection system.
- Handling, storing, and securing tools and materials.
- Method for prompt, safe removal, of injured workers.

METHOD AND PROVISIONS FOR RESCUE WHEN WORKING AT HEIGHTS

Self-Rescue

A reliable method for self-rescue shall be developed and deployed which shall include the use of the "buddy system" when personnel are working in conditions where fall protection systems (other than standard guard rail systems) are employed. The "buddy" or assigned safety person shall remain within visual/verbal range to initiate rescue of the fallen worker if required and shall have a reliable method of communication (cell phone, radio, etc.) to summon rescue. The site specific methods used for self-rescue shall be identified in the following section.

Self-Rescue Method/Process

Assisted Rescue

Assisted rescue may be provided either by a professional rescue agency or by qualified company personnel. Select the appropriate choice below (professional rescue agency or qualified company

personnel) and complete the information contained in the tables below the selection. If both in-house and professional rescue are used complete both sections and add additional information as necessary to clearly define the processes used.

☐ A Professional Rescue Agency shall be used to assure prompt rescue of fallen workers (check box and document additional information required for rescue agency option).

Professional Rescue Agency Option

If a professional rescue agency is going to be used they shall be contacted to review the potential rescue requirements. This review shall include a discussion of the types of fall protection used by company personnel and the environment where the agency may be called upon to perform a rescue. The rescue agency shall advise (in writing) the types of rescue it can perform and provide detailed instructions regarding how they are to be called and if they need to be advised when certain activities are planned or certain conditions exist so they may ensure the fastest possible response.

If a professional rescue agency will be used to provided assisted rescue document the required information in the following table.

PROFESSIONAL RESCUE AGENCY OPTION	
Rescue Agency (Name/Location)	
Contact Person (Name/Phone):	
Coordination Requirements Before Work:	
Method To Summon Help:	

☐ Qualified Company Personnel shall be used to assure prompt rescue of fallen workers (check box and document additional information required for company option).

Qualified Company Personnel Option

If outside professional rescue agencies cannot be relied upon to promptly rescue fallen personnel, then company personnel shall be identified and trained to serve as rescue personnel. Training shall be conducted by a qualified training agency or company and shall include specific training on the methods and equipment which may be required during site-specific rescue scenarios. It shall include hands on training and certification to demonstrate proficiency in rescue and shall be of the duration recommended by the training agency/company. Equipment procured for use as well as practice requirements and recurring formal training requirements for the company rescue personnel shall conform to the recommendations and requirements set forth by the training agency/company.

If qualified company personnel are to be used to provide assisted rescue, document the required information in the following tables.

QUALIFIED PERSONNEL RESCUE OPTION	
Qualified Training Agency/Company:	
Coordination Requirements Before Work:	
Method To Summon Help:	

NAMES OF RESCUE PERSONS	JOB CLASSIFICATION/JOB TITLE

QUALIFIED AGENCY PROVIDING TRAINING AND CERTIFICATION

Approved: _____ _____

{Enter Name} Date
URS Site/Location/Project Manager

Approved: _____ _____

{Enter Name} Date
URS Safety Manager

URS	Safety Management Standard **ALTERNATIVE FALL PROTECTION PERMIT**	Attachment 040-4 NA Issue Date: June 1999 Revision 7: March 2013

Location & Time Information	
Location & description of fall hazard:	Job/Work Order:
Description of work to be done:	

Requestor(s) Name	Requestor(s)Title

Justification for Using Administrative Controls
State why more effective controls are impractical.

Hazard Identification	
Potential maximum fall distance:	
List any exposed hazards or objects that could be struck during a fall that would cause greater harm.	
Are there factors that could make this work more hazardous?	

Fall Protection Controls
Describe the fall protection strategy and what limitations this strategy has:

Rescue Information & Contact	
Phone number used to for rescue services:	

Authorized User Certification

I/we agree to, and certify the following:

- A pre-task briefing has been held which included all personnel involved with this work.
- An on-site hazard assessment has been conducted and documented on this permit.
- Work described on this permit can be done safely.
- If work conditions or work requirements change, or hazards not previously identified are encountered, work will stop until a new permit is issued or the new hazards have been eliminated.
- This work will ***not*** be performed during inclement weather/rain.

Name (printed) Signature(s) Date / Time

Permit Authorization

- All personnel performing work or designated as observers are trained as Authorized Users in accordance with SMS 040 NA.
- More effective fall protection controls are impractical for reasons other than cost or convenience and the justification for working with only administrative controls is acceptable.
- Verbal approval has been secured from the Site/Location/Project Manager or Safety Manager.

Authorized Start Date/Time for Permit:	**Expiration Date/Time for Permit** **(Not to exceed work shift)**
Date**:** Time**:**	Date**:** Time**:**

Name & Title of approving authority (Manager/Supervisor that is a Fall Protection Competent Person)

_____ _____ ____ / ____

Name Title Date / Time

THIS PERMIT MUST BE POSTED WHERE THE WORK IS BEING PERFORMED.

THIS PERMIT EXPIRES AT THE END OF THE SHIFT ON WHICH IT WAS ISSUED.

A NEW PERMIT MUST BE ISSUED FOR WORK THAT CONTINUES INTO THE NEXT SHIFT.

IN THE EVENT OF AN EMERGENCY CONTACT:

URS SAFETY MANAGEMENT STANDARD

Respiratory Protection

1. Applicability

This standard applies to the operations of URS Corporation and its subsidiary companies.

2. Purpose and Scope

The purpose of this standard is to protect employees (1) performing operations for which exposures cannot be controlled by use of conventional engineering or administrative controls and (2) prior to establishing a negative air exposure assessment. This standard is also used to select use, maintain, and store respiratory protection equipment in accordance with acceptable practices.

3. Implementation

The associated implementing regional procedures for this standard are included as attachments:

SMS 042 NA – North America; Australia / New Zealand

SMS 042 INT – International Operations (including Europe, Asia, South America and Africa)

URS SAFETY MANAGEMENT STANDARD

Respiratory Protection

1. Applicability

This standard applies to URS Corporation and its subsidiary companies that may require the use of respiratory protection, including Immediately Dangerous to Life and Health (IDLH) and emergency conditions. This program also addresses the voluntary use of respirators.

2. Purpose and Scope

The purpose of this standard is to protect those employees performing operations for which exposures cannot be controlled by use of conventional engineering or administrative controls, and prior to establishing a negative air exposure assessment, and to require that respiratory protective equipment is selected, used, maintained, and stored in accordance with acceptable practices. This procedure establishes the minimum standard for respirator training, selection, and use during the performance of all work requiring such protection.

3. Implementation

Implementation of this standard is the responsibility of the URS manager directing activities of the facility, site, or project location.

4. Requirements

A. Before assigning hazardous jobs to employees, determine if respirators are required.

1. Assign a project-specific Respiratory Protection Program administrator. This position shall be manned by a competent industrial hygienist or other technically qualified person who knowledgeable of the requirements of the URS and project-specific programs, have appropriate training in the principles and application of respiratory protection, and have the authority to conduct program evaluations.

2. If the potential for respiratory hazards exists for any portion of a job, complete Attachment 042-1 NA – Identifying When A Respirator Is Needed.

3. Contact a local Health, Safety, and Environment (HSE) Manager, Regional or Strategic Business Unit (RBU/SBU) HSE Manager, or URS Certified Industrial Hygienist (CIH) for assistance, as needed, if any of the questions in Attachment 042-1 are checked "yes."

4. Follow instructions in Attachment 042-2 NA – Voluntary Use or Respirators – for employees who wish to wear respirators on a voluntary basis when not required to by URS or a regulatory agency.

5. Follow all the requirements of this standard for employees who wish to voluntarily use tight-fitting (e.g., air purifying) respirators.

6. Required respirators will be paid for by URS and will be provided without cost to the employee.

7. Control worker's exposure to air contaminants, where practicable, by engineering or administrative controls, or by substitution of process materials with less-toxic substances. Use respirators only when engineering or administrative controls are not feasible or completely effective.

B. Select the proper respirator for the job.

1. Contact the appropriate HSE Manager or CIH for assistance in respirator selection for those jobs identified in Attachment 042-1 NA.

2. Contact the appropriate HSE Manager for follow up if there are any problems implementing the recommendations made.

C. Require employees who will use respirators to be medically qualified by a project medical consultant (PMC) before fit-testing and assigning them a respirator. The PMC should preferably be an occupational physician; however, the Occupational Safety and Health Administration (OSHA) allows any physician or licensed health care professional (PLHCP) to conduct evaluations of respiratory protection medical forms. The PMC, where required, will determine the physiological and psychological status that is relevant to wearing different types of respirators. The PMC will review all questionnaires and test results and verify in writing that workers are physically and psychologically able to perform work while using respiratory protective devices. These determinations will be made using guidelines established by the PMC.

1. For program details, refer to SMS 024 – Medical Screening and Surveillance.

2. Require that employees have a current and accurate Medical Surveillance form (Attachment 024-2).

3. Obtain a copy of the employee's Health Status Medical Report from the Office Health and Safety Representative. The consulting occupational

physician of the medical service provider following each work-related examination issues the Health Status Medical Report. Employees cannot be assigned respirators unless they are medically cleared for respirator use.

D. Require respirator users to receive appropriate training.

1. All respirator users must be trained:

    a. Before they are assigned a respirator.

    b. Annually thereafter.

    c. Whenever a new hazard or job is introduced.

    d. Whenever employees fail to demonstrate proper use or knowledge.

2. Document training in accordance with the requirements of SMS 055 – Training.

3. Training must address, at a minimum, the following:

    a. Why the respirator is necessary, and what conditions can make the respirator ineffective.

    b. What the limitations and capabilities of the respirators are.

    c. How to inspect, put on and remove, and check the seals of the respirator.

    d. What the respirator maintenance and storage procedures are.

    e. How to recognize medical signs and symptoms that may limit or prevent effective use of the respirator.

    f. The engineering and administrative controls being used and the need for respirators.

    g. The hazards and consequences of improper respirator use.

    h. How to recognize and handle emergency situations.

E. Require respirator users to be fit tested.

1. Any employee who has been assigned a reusable respirator must be fit tested on an annual basis (no more than 1 year may elapse between fit tests), or when the employee is assigned a respirator of a different make, type, or size from that previously tested.

2. Qualitative or quantitative fit testing can be performed by contract or in-house personnel.

3. Obtain a signed, written copy of the fit-test results. The fit-test results should include:

    a. Employee's name and employee identification number.

    b. Respirator brand, model, and size fitted for.

    c. Date fit tested.

    d. Method of fit testing used.

    e. Name and signature of fit tester.

    f. Manufacturer and serial number of fit-testing apparatus (if used).

    A fit test results form is available as Attachment 042-3 NA.

F. The project-specific Respiratory Protection Program administrator will issue respirators to persons who must wear respirators for protection against harmful atmospheres should be given adequate training to ensure that the correct respirator is issued for each application. This training should include, but not necessarily be limited to, the following:

1. Establishment of a working knowledge of the specific types of respirators to be issued, their limitations, and the importance of issuing only the respirators for which each user is specifically approved.

2. Familiarization with the respirator maintenance and repair program in order to be able to identify any respirator that is improperly cleaned or needs repair.

3. Familiarization with the procedures for respirator issue. Only persons trained to ensure that proper respirators are issued will be permitted to issue respirators to persons needing them.

G. Where required by Section 2.C of SMS 043 – Personal Monitoring, conduct initial exposure assessments for contaminants of concern. Record collected air-monitoring data. Respiratory protection must be worn until such

assessments have been conducted, and it is determined that respiratory protection is not warranted.

H. Provide qualified employees with respirator(s) and adequate amounts of parts and cartridges.

1. Assign employees whose duties require respirators their own respirator for which they have been fit tested.

2. Provide special eyeglass inserts designed for the respirator if an employee must wear eyeglasses with a full-facepiece respirator. Contact lenses may be worn when wearing a full-facepiece respirator.

3. Respirators and cartridges must be approved by the National Institute for Occupational Safety and Health (NIOSH). Military-issue respirators are approved under Military Standard AR 11-34.

I. Require respirators to be used properly.

1. Prohibit facial hair where the respirator-sealing surface meets the wearer's face.

2. Require employees to perform a positive and negative fit check every time the respirator is put on.

3. Employees will leave the area where respirators are being used:

   a. Before removing the facepiece for any reason.

   b. To correct any respirator malfunction.

   c. To change the respirator and/or respirator cartridges.

   d. The employee becomes ill (dizziness, nausea, etc.).

   e. If any of the following is detected:

      1. Vapor or gas breakthrough

      2. Leakage around the facepiece

      3. Increased breathing resistance.

4. Use cartridges with End-of-Service-Life indicators, or determine the respirator cartridge change-out schedule. See Supplemental Information A for guidance.

J. Require respirators to be cleaned and stored properly.

1. Clean and disinfect respirators after each use.

2. Store respirators in a plastic bag or case and in a clean location.

3. Inspect respirators before use and after each cleaning.

K. Address issues associated with special-use respirators (self-contained breathing apparatus; air-supply respirators; emergency escape respirators).

1. Self-Contained Breathing Apparatus

   Inspect self-contained breathing apparatus monthly and after each use in accordance with manufacturer's instructions.

2. Air-Supplied Respirators

   a. Air used for atmosphere-supplying respirators must meet or exceed the requirements for Type 1 – Grade D breathing air. Never use oxygen.

      1. A certificate of analysis must accompany bottled air.

      2. Compressors used to supply breathing air must:

         i. Prevent entry of contaminated air into the air supply.

         ii. Minimize moisture content.

         iii. Have suitable in-line sorbent beds and filter to provide appropriate air quality.

         iv. Have a high–carbon-monoxide alarm that sounds at 10 part per million (ppm).

   b. Couplings on air-hose lines must be incompatible with other gas system.

3. Emergency Escape Respirators

   a. Emergency escape respirators intended to be used only for emergency exit. This may include situations where IDLH atmospheres and oxygen-deficient conditions exist. These respirators may be used as stand-alone protection or in conjunction with air-supplied respirators.

L. Require follow-up training and medical surveillance to be provided as directed.

1. Provide follow-up physical examinations as directed by the SMS 024-3 NA – Medical Screening and Surveillance Exam Protocol table.

2. Provide follow-up physicals as directed by the Occupational Health Manager.

3. Provide annual refresher training.

4. Provide annual fit testing.

5. Conduct regular evaluations to determine the effectiveness of the program's implementation. This should include interviews with employees regarding such topics as respirator selection, fit, and maintenance.

M. Where required, implement procedures for dealing with entry into areas with IDLH conditions.

1. Ensure at least one employee or attendant is located outside the area with the IDLH atmosphere. This person must be equipped with:

   a. Pressure demand or other positive pressure self-contained breathing apparatus (SCBA), or a pressure demand or other positive pressure supplied-air respirator with auxiliary SCBA; and either

   b. Appropriate retrieval equipment to removing the employee within the IDLH atmosphere, or

   c. Equivalent means of rescue.

2. Maintain communication between the employee(s) in the area with the IDLH environment and the employee(s) or attendant(s) outside the area. Communication may include visual, voice, or signal lines.

3. In an emergency situation, the manager overseeing operations must be notified before employee(s) outside the area with the IDLH atmosphere enter the space.

5. Documentation Summary

All Respiratory Protection Program documentation must be protected by the Privacy Act of 1974 (PL-93-579), and confidential medical information not required by OSHA may be protected under the Health Insurance Portability Accountability Act of 2003 (HIPAA).

The following information will be maintained in the office/project file by the Project Manager:

1. Identifying When A Respirator Is Needed – Attachment 042-1 NA.
2. Voluntary Use of Respirators – Attachment 042-2 NA.
3. Fit Test Record – Attachment 042-3 NA.
4. Employee Health Status Medical Report, including clearance for respirator use.
5. Employee Respirator Training Records.

6. Resources

A. U.S. OSHA Standard - Respiratory Protection – 29 Code of Federal Regulations (CFR) 1910.134

B. U.S OSHA Technical Links – Respiratory Protection

C. ANSI Z88.6-2006 – Respirator Use – Physical Qualifications for Personnel

D. AIHA, The Occupational Environment – Its Evaluation and Control

E. NIOSH Respirator Decision Logic

F. NIOSH Guide to Industrial Respiratory Protection

G. SMS 024 – Medical Screening and Surveillance Program

H. SMS 055 – Health and Safety Training

I. Attachment 042-1 NA – Identifying When a Respirator is Needed

J. Attachment 042-2 NA – Voluntary Use of Respirators

K. Attachment 042-3 NA – Fit Test Record

L. Attachment 042-4 NA – Respirator Standard Operating Procedure

7. Supplemental Information

A. Respirator Cartridge Change Schedule

B. Hazard Analysis for Respirator Use

C. Fit Testing Guidance

D. Respirator Selection Guidance

E. Inspection, Cleaning, and Storage Guidance

URS	Health, Safety and Environment **IDENTIFYING WHEN A RESPIRATOR IS NEEDED**	Attachment 042-1 NA Issue Date: July 2000 Revision 6: March 2012

Site Location: _____ Date: _____

Name of Person Performing Evaluation: _____

Project: _____

Answer the questions below for the jobs you are to perform on site. If a 'Yes' response is checked, consult with an HSE Manager or a URS Certified Industrial Hygienist (CIH) to determine if a respirator is truly needed for the job; and if so, the type of respirator needed.

It is important to be aware of the respiratory protection requirements for any chemicals you are exposed to; these can be found on the Material Safety Data Sheets or chemical labels.

Material Used or Process to be Performed			Notes
Abrasive Blasting			
• Abrasive blasting (with any type of grit or material) will be performed	☐ **Yes**	☐ **No**	_____
• Employee will fill abrasive blasting pots or perform clean-up activities	☐ **Yes**	☐ **No**	_____
• Employee will be in a contained area where abrasive blasting is taking place	☐ **Yes**	☐ **No**	_____
Acids			
• Liquid or powder acids will be used in a situation where acid vapors, mists, or dust may be breathed	☐ **Yes**	☐ **No**	_____
Adhesives			
• Aerosols-propelled adhesives are to be used in areas where there is insufficient or no local exhaust ventilation	☐ **Yes**	☐ **No**	_____
• Two-part adhesives (mix part one with two, let set, then use) are to be used in areas where there is limited ventilation	☐ **Yes**	☐ **No**	_____
Alkalis/Bases/Caustics			
• Powdered alkalis will be used in a situation where an airborne dust may be breathed	☐ **Yes**	☐ **No**	_____
Asbestos Abatement			
• Asbestos will be removed, repaired, or sampled	☐ **Yes**	☐ **No**	_____
• Employees will be inspecting or overseeing areas where asbestos will be removed or disturbed	☐ **Yes**	☐ **No**	_____
Cleaning Compounds			
• Degreasers or carbon removers will be used in areas where local exhaust ventilation is not provided	☐ **Yes**	☐ **No**	_____
• Aerosol-propelled cleaning compounds will be used in areas where there is no local exhaust ventilation	☐ **Yes**	☐ **No**	_____
• Entry into a vault, tank, silo, sewer, or other confined space that has been used for chemical storage, recently painted, or where inert gases may have been used without ventilation	☐ **Yes**	☐ **No**	_____
• Degreasers or carbon removers will be used in voids, tanks, or other confined spaces	☐ **Yes**	☐ **No**	_____
Corrosion-Preventive Compounds			
• Corrosion-prevention compounds, including chemical conversion compounds and corrosion inhibitors, will be used in areas where there is no local exhaust ventilation	☐ **Yes**	☐ **No**	_____
Detergents/Soaps			
• Ammonia-based detergents will be used in large quantities (more than 5 gallons) in areas where local exhaust ventilation cannot be provided	☐ **Yes**	☐ **No**	_____

Material Used or Process to be Performed			Notes
• Large quantities (5- or 55-gallon containers) of high pH powder detergent/soap will be used in a situation where dust may be breathed	☐ **Yes**	☐ **No**	_____
Fuels (including regular or unleaded gasoline, kerosene, diesel fuel, JP-5)			
• Employees will be inside unventilated fuel cells or other confined spaces containing fuels	☐ **Yes**	☐ **No**	_____
Grinding, Cutting, Sanding			
• Cutting, grinding, or sanding surfaces that have coatings containing beryllium, cadmium, chromium, lead, or zinc	☐ **Yes**	☐ **No**	_____
• Cutting, grinding, or sanding surfaces that are concrete or glass without use of ventilation or water	☐ **Yes**	☐ **No**	_____
Hazardous Waste Sites			
• Employees will be performing tasks on a hazardous waste site that requires the use of respirator (as indicated in the site health and safety plan)	☐ **Yes**	☐ **No**	_____
• Employees will be performing site assessments on potential hazardous waste sites	☐ **Yes**	☐ **No**	_____
Hydraulic Fluids (including petroleum-based fluids, synthetic fire-resistant fluids, and water-based fire-resistant fluids)			
• Hydraulic fluids and the vapors generated will not be exhausted using local exhaust ventilation	☐ **Yes**	☐ **No**	_____
• Synthetic fire-resistant fluids or water-based fire-resistant fluids will be used in an area where the air is contaminated with visible mist or spray from hydraulic fluids	☐ **Yes**	☐ **No**	_____
Inspection Penetrants (including Flouro-finder, water-indicating pastes, and penetrant removers)			
• An aerosol-propelled inspection penetrant will be used in an area where local exhaust ventilation cannot be provided, or in a situation where the solvent vapors can be breathed	☐ **Yes**	☐ **No**	_____
Lead Abatement Activities			
• Lead-containing materials will be disturbed, removed, or sampled	☐ **Yes**	☐ **No**	_____
• Employees will be inspecting or overseeing areas where lead will be removed or disturbed	☐ **Yes**	☐ **No**	_____
Lubricants/Oils			
• Aerosol lubricants or oils will be sprayed with no immediate exhaust ventilation	☐ **Yes**	☐ **No**	_____
Oxidizers (materials that give off oxygen, including chlorine laundry bleach, calcium hypochlorite, calcium oxide, oxygen candles, lithium hydroxide, hydrogen peroxide, and sodium dichromate)			
• Oxidizers containing organic chlorine will be used in a situation where the dusts or vapors may be breathed	☐ **Yes**	☐ **No**	_____
• Powdered oxidizers will be used in a situation where airborne dust may be breathed	☐ **Yes**	☐ **No**	_____
Paint Materials (including paints, primers, thinners, enamels, lacquers, strippers, coatings, and varnishes)			
• Paint materials will be spray-applied in areas where there is no local exhaust ventilation	☐ **Yes**	☐ **No**	_____
• Two-part (mix part a with part b, let set, then apply) polyurethane or epoxy polyamide paints will be brush- or spray-applied	☐ **Yes**	☐ **No**	_____
• Paints containing beryllium, cadmium, chromium, lead, or zinc (refer to the MSDS)	☐ **Yes**	☐ **No**	_____

Material Used or Process to be Performed			Notes
• Paint materials will be applied in confined spaces	☐ Yes	☐ No	_____
Solvents (including hydrocarbon solvents such as acetone, methyl ethyl ketone, toluene, xylene, and alcohols, as well as mixed solutions like antifreeze, heat-transfer fluid, turpentine, pipe-dope, and naphtha thinner)			
• Local exhaust ventilation will not be provided and work will involve breathing solvent vapors	☐ Yes	☐ No	_____
• Solvents will be used within confined spaces	☐ Yes	☐ No	_____
• Solvents will be applied using aerosols	☐ Yes	☐ No	_____
Thermal Insulation (including asbestos and non-asbestos materials like pipe lagging, fiberglass insulation, boiler insulation, packing materials, and floor or ceiling tiles)			
• Insulation will be disturbed, removed, or sampled	☐ Yes	☐ No	_____
Water-Treatment Chemicals (includes corrosive chemicals such as tri-sodium phosphate, hardness buffer, titrating solution, morpholine, caustic soda, citric acid, and nitric acid, as well as toxic chemicals such as mercuric nitrate, hydrazine, EDTA, and sodium nitrate)			
• Morpholine, EDTA, or harness buffer/titrating solution is to be used in poorly ventilated spaces	☐ Yes	☐ No	_____
• Powdered water-treatment chemicals will be used in a situation where chemical dusts may be breathed	☐ Yes	☐ No	_____
Welding/Brazing/Cutting			
• Welding will be performed in confined spaces	☐ Yes	☐ No	_____
• Welding galvanized metal or stainless steel	☐ Yes	☐ No	_____
• Brazing with cadmium or lead	☐ Yes	☐ No	_____
• Torch-cutting on coated/painted materials	☐ Yes	☐ No	_____
For Any of the Above-Listed Activities			
• An employee will be in the immediate area – within 10 feet of the job or operation; or	☐ Yes	☐ No	_____
• Employee will be inside confined space where activities are taking place; or	☐ Yes	☐ No	_____
• Employee will be inside a “controlled area” such as found in asbestos abatement, lead abatement, radiation control area, or a hazardous waste site	☐ Yes	☐ No	_____
Other			
• A chemical process procedure (e.g., hydrogen sulfide in refineries, ammonia as a refrigerant, chlorine in water disinfection, inert gas systems) required the use of a respirator or emergency escape respirator	☐ Yes	☐ No	_____
• Mine operations require issuance of an emergency escape respirator	☐ Yes	☐ No	_____
• Emergency response plan requires issuance of respirators to first responders	☐ Yes	☐ No	_____
• Radiological controls require use of a respirator	☐ Yes	☐ No	_____
• Laboratory Chemical Hygiene plan requires issuance of respirators	☐ Yes	☐ No	_____
• Exposure to airborne mold	☐ Yes	☐ No	_____

Instructions: Have the employee that is opting to use a respirator for non-overexposure conditions read this page, and then sign on the bottom of the page. Maintain a copy in the employee's training file.

Respirators are an effective method of protection against designated hazards when properly selected and worn. Respirator use is encouraged, even when exposures are below the exposure limit, to provide an additional level of comfort and protection for employees. However, if a respirator is used improperly or not kept clean, the respirator itself can become a hazard to the employee.

Sometimes employees may wear respirators to avoid exposures to hazards, even if the amount of the hazardous substance does not exceed the limits set by OSHA standards. If your employer provides respirators for your own voluntary use, or if you provide your own respirator, you need to take certain precautions to be sure that the respirator itself does not pose a hazard.

1. Read and follow all instructions provided by the manufacture on use, maintenance, cleaning, and care, and warnings regarding the respirators limitations.
2. Choose respirators certified for use to protect against the contaminant of concern. NIOSH (the National Institute for Occupational Safety and Health) certifies respirators in the U.S. A label or statement of certification should appear on the respirator or respirator packaging; it will tell you what the respirator is designed for and how it will protect you.
3. Do not wear your respirator into atmospheres containing contaminants against which your respirator is not designed to protect. For example, a respirator designed to filter dust particles will not protect you against gases, vapors, fumes, smoke, or very small solid particles.
4. Keep track of your respirator so that you do not mistakenly use someone else's respirator.
5. If you have any health conditions (asthma; high blood pressure; emphysema; heart disease) that could be aggravated by using a respirator, you should check with your doctor before using one.

I have read and understand this information: Date: _____

_____

Employee's Name (Please Print):

_____

Employee's Signature:

URS	Health, Safety and Environment **FIT TEST RECORD**	Attachment 042-3 NA Issue Date: July 2000 Revision 6: March 2012

Employee Name _____ Employee Number _____

Office/Project _____ Last Medical Exam _____

Fit Test Date _____ Corrective Lenses Needed Yes ☐ No ☐

Medically qualified to wear respirator? Yes ☐ No ☐

Briefed on fundamental principles of respiratory protection, use, selection, inspection, cleaning, maintenance, and storage of equipment? Yes ☐ No ☐

Test agent recognition: Yes ☐ No ☐ N/A ☐

	RESPIRATOR 1	**RESPIRATOR 2**	**RESPIRATOR 3**
Equipment Type	_____	_____	_____
Manufacturer's Name	_____	_____	_____
Model	_____	_____	_____
Size	_____	_____	_____
Facepiece Composition (Rubber/Silicone)	_____	_____	_____

TEST PERFORMED	**RESPIRATOR 1**	**RESPIRATOR 2**	**RESPIRATOR 3**
Negative Pressure Test:	Pass ☐ Fail ☐	Pass ☐ Fail ☐	Pass ☐ Fail ☐
Positive Pressure Test:	Pass ☐ Fail ☐	Pass ☐ Fail ☐	Pass ☐ Fail ☐
Isoamyl Acetate Test:	Pass ☐ Fail ☐	Pass ☐ Fail ☐	Pass ☐ Fail ☐
Irritant Smoke Test:	Pass ☐ Fail ☐	Pass ☐ Fail ☐	Pass ☐ Fail ☐
Bitrex:	Pass ☐ Fail ☐	Pass ☐ Fail ☐	Pass ☐ Fail ☐
Saccharin:	Pass ☐ Fail ☐	Pass ☐ Fail ☐	Pass ☐ Fail ☐
Generated Aerosol Quantitative Fit:	P ☐ F ☐ Fit Factor _____	P ☐ F ☐ Fit Factor _____	P ☐ F ☐ Fit Factor _____
Ambient Aerosol Quantitative Fit:	P ☐ F ☐ Fit Factor _____	P ☐ F ☐ Fit Factor _____	P ☐ F ☐ Fit Factor _____
Controlled Negative Pressure Quantitative Fit:	P ☐ F ☐ Fit Factor _____	P ☐ F ☐ Fit Factor _____	P ☐ F ☐ Fit Factor _____

_____ _____ _____

Examiner's Name (Please Print) **Examiner's Signature** **Date**

_____ _____

Employee's Signature **Date**

Job Task Reviewed: _____

Date Reviewed: _____

Task Review by: _____

ADMINISTRATIVE PROCEDURES

1. All respirator users must be medically qualified to use respirators.
2. Respirator users must be trained annually in respirator use, and must be fit-tested annually.
3. The respirator will be used only by the person to whom it was issued.
4. Persons using glasses who are required to use a full-face respirator may use contact lenses or eyeglass inserts designed for the respirator.

GUIDANCE FOR SELECTION OF RESPIRATOR AND CARTRIDGES/FILTERS

1. Respirators are currently being issued and used for the following job activities:

   _____

   _____

2. The respirator will be equipped with the following cartridges/filters:

   _____

3. Filters are to be changed when the breathing resistance increases.

4. Cartridges are to be changed _____ (frequency), or when the contaminant you are protecting yourself from can be smelled or tasted.

FIT TESTING & FIT CHECKING

1. Fit testing is required annually. To arrange for fit testing, call your local, project, or regional safety representative or qualified industrial hygienist.
2. Respirator users will “fit check” the respirator every time the respirator is put on:
   - **Negative Check** – Cover filters/cartridges with palms of hands and breathe in: leakage should not be detected around the face seal of the respirator. Do not use if leakage is detected.
   - **Positive Check** – Cover the exhalation valve cover with palm of hand and blow out slightly: leakage should not be detected around the respirator seal.
   - **For Air Supply Respirators** – Kink or close off air supply hose and breathe in: leakage should not be detected around the face seal of the respirator.

CLEANING AND MAINTENANCE OF RESPIRATOR

1. Clean and disinfect respirator after every use.
2. Inspect respirator at the end of work every day in use to ensure parts are not missing. Replace missing parts from stock supply.
3. Store clean respirator in labeled plastic bag out of direct sunlight.
4. Do not alter respirator in any way.

A cartridge change schedule must be developed for cartridges or canisters used with air purifying respirators that do not have an End of Service Life Indicator (ESLI). The purpose of this is to prevent contaminants from breaking through the respirator's sorbent cartridge(s), and thereby over-exposing employees. NIOSH has approved ESLIs for only four cartridges or canisters (mercury vapor, carbon monoxide, ethylene oxide, and hydrogen sulfide). Historically we have relied on the warning properties (odor, irritation) of a contaminant to dictate cartridge change. OSHA no longer allows this as the sole basis for changing respirator cartridges. In developing a change schedule the following factors should be considered:

- Contaminants
- Concentration
- Frequency of use (continuously or intermittently throughout the shift)
- Temperature and humidity
- Work rate
- The presence of potentially interfering chemicals.

The worst-case conditions should be assumed to avoid early breakthrough. This must be documented in the project health and safety plan or, in the cases of office or labs, in the site specific Respiratory Protection Program.

Sources of Help

OSHA provides assistance in developing respirator cartridge change schedules on its website at http://www.osha.gov/SLTC/etools/respiratory/change_schedule.html.

Most cartridge manufacturers maintain on-line interactive cartridge service life programs that can be used to evaluate the service life against many contaminants. Typically, these do not evaluate the service life against mixtures (multiple contaminants).

Because of the complexity in evaluating mixtures, OSHA offers the following guidance:

- When the individual compounds in the mixture have similar breakthrough times (i.e., within one order of magnitude), service life of the cartridge should be established assuming the mixture stream behaves as a pure system of the most rapidly migrating component with the shortest breakthrough time (i.e., sum up the concentration of the components).
- Where the individual compounds in the mixture vary by 2 odors of magnitude or greater, the service life may be based on the contaminant with the shortest breakthrough time.

Rule of Thumb *("The Occupational Environment" - Its Evaluation and Control)*

- If the chemical's boiling point is >70 °C and the concentration is less than 200 ppm, you can expect a service life of 8 hours at a normal work rate.
- Service life is inversely proportional to work rate.
- Reducing concentration by a factor of 10 will increase service life by a factor of 5.
- Humidity above 85% will reduce service life by 50%.

OSHA Interpretation

The OSHA inspection procedures for the respiratory protection standard specifies that where contaminant migration is possible, respirator cartridges/canisters should be changed after each work shift where exposure occurs unless there is objective data to the contrary (description studies) showing the performance in the conditions and schedule of use/non-use found in the workplace.

A. A hazard analysis of the workplace must be performed before selecting respirators. The analysis must consider inhalation hazards under routine and foreseeable emergency conditions. Other factors to consider when choosing respirators include skin and eye exposure, the effects of heat or cold, use of protective clothing, employee conditioning, and workload.

B. Respiratory hazards that must be identified include:

1. Oxygen Deficiency
2. Air Contaminants
3. Particulates
4. Toxic Gases

C. Evaluating Exposures

There are several options on how to evaluate exposures:

1. One option is to rely on personal monitoring data of employees. Representative exposure data provided by industry or laboratory studies is acceptable as long as it applies to similar tasks and conditions at the worksite.
2. The professional judgment provided by the Business, RBU, SBU, Office, or Project HSE Manager and/or as recommended by a qualified industrial hygienist or safety professional may be employed for the task.
3. If the exposure cannot be identified or estimated, then the atmosphere is considered immediately dangerous to life or health (IDLH). Atmospheres with levels of oxygen below 19.5% are also defined as IDLH.
4. Trained and qualified technical personnel shall perform assessment of the degree of respiratory hazard through sampling and testing of the work environment. Problems requiring special respiratory protection should be discussed with the Business or Regional HSE Manager or qualified industrial hygienist.
5. The Project HSE Manager shall establish procedures to control respiratory hazards through engineering or administrative controls, product/material substitution, respiratory protective devices, or a combination of these methods.
6. He/she shall also perform annual evaluations of the effectiveness of the project's respiratory protection program. These evaluations shall be documented.
7. The Project HSE Manager shall select and provide adequate respiratory protective devices for use on the project. This selection shall be based upon the specific type of air contaminant(s), the concentration of the contaminants(s) or oxygen deficiency in the work environment.
8. Establish a change schedule for air-purifying respirators based upon objective information or data that will ensure that cartridges are changed before the end of their useful life. OSHA has mandated that reliance on warning properties is no longer valid

A. A quantitative fit-test provides the most accurate information; qualitative fit testing depends on the respirator wearer's sense of smell and taste (subjective response). OSHA's standard requires fit-testing for any face mask (full or half) designed to have a tight seal along the face, whether it is used in a positive or negative pressure mode, and whether it is disposable or not. If the required fit factor is greater than 100, then a quantitative fit-test must be performed.

B. Each person will have a qualitative or quantitative fit test when first required to wear a respirator, every 12 months when respirators will be worn thereafter, or as hazards or respiratory needs change.

C. Each person will have a qualitative or quantitative fit test for each specific make(s) and model(s) of respirator(s) for which the worker may wear.

D. Under no circumstances shall a worker be allowed to use any respirator if the results of the qualitative fit test indicate that the worker is unable to obtain a satisfactory seal.

E. The eight exercises required by OSHA under the respiratory protection standard, 29 CFR 1910.134, Appendix A, are as follows (note that these are not required controlled negative pressure (CNP) quantitative fit testing):

   1. normal breathing
   2. deep breathing
   3. head side to side
   4. head up and down
   5. talking out loud
   6. grimacing (quantitative only)
   7. bending
   8. normal breathing

F. Qualitative and quantitative fit testing must be performed in negative pressure mode for all tight fitting respirators, whether the respirator is positive or negative pressure demand.

G. Qualitative and quantitative fit testing must be conducted according to one of the protocols found in 29 CFR 1910.134, Appendix A.

H. Employees using respirators when not required under the standard (i.e., dust masks or comfort masks for nuisance type dust without a specified exposure level) must be aware of the potential hazards of using a respirator. See Attachment 042-2 of this standard or Appendix D of 29 CRF 1910.134 for information program requirement.

A. Physical characteristics, functional capabilities, and performance limitations of various types of respirators shall be considered in the selection process.

B. Specifics regarding hazard classification, descriptions of respirator types and modes of operation, and the capabilities and limitations of respirators are listed in ANSIZ88.2-1992.

C. To select the correct respirator, the hazards must first be identified in the workplace and then follow these steps:

1. Determine if the environment is IDLH.
    a. All oxygen deficient atmospheres shall be considered IDLH.
    b. If the employee exposure cannot be reasonably estimated, the atmosphere must be considered IDLH.
2. Identify the contaminant(s) present in the atmosphere and answer the following questions:
    a. What is the concentration?
    b. Are they gaseous or particulate?
    c. Are the contaminants IDLH?
3. After completing the above steps select the appropriate respirator for the particular hazard(s).
    a. IDLH – Provide a full facepiece NIOSH certified pressure demand SCBA with a minimum service life of 30 minutes or a full facepiece pressure demand airline respirator with an auxiliary self-contained air supply.
    b. Non-IDLH – A respirator must be provided that is appropriate for the contaminant(s) identified.
4. For protection against gases and vapors, <u>either</u> an atmosphere-supplying respirator or an air-purifying respirator equipped with a NIOSH certified end-of-service-life indicator (ESLI) for the contaminant must be used. In lieu of an ESLI, a change schedule for cartridges based on objective information or data may be used to ensure cartridges are changed before the end of their service life occurs (see Supplemental Information A). In most cases, respirator cartridge manufacturers provide a product specific on-line or CD-ROM based “Service Life Calculator” that allows determination of useful service life of a cartridge based on expected concentration and environmental and work conditions. If neither an ESLI or change schedule is available, a supplied air respirator must be used.
5. For protection against particulates, an atmosphere-supplying respirator or an air-purifying respirator equipped with a NIOSH-certified high-efficiency particulate air (HEPA) filter under 30 CFR 11 or an air-purifying respirator equipped with a NIOSH certified filter for particulates under 42 CFR 84 must be used.

6. There are three classes of filters under NIOSH (N, R, and P series) with three levels of filter efficiency in each class – 95%, 99%, and 99.97% (classified as 100). All filters can be used regardless of aerosol size. The new filters are classified as follows:
    a. N – For solid particulates and non-oil aerosols that do not degrade filter performance.
    b. R – For solid particulates and degrading oil-based aerosols. R filters have “use limitations.”
    c. P – For solid particulates and degrading oil-based aerosols. P filters generally have no “use limitations” other than those normally associated with particulate filters. The P100 filter is the replacement for the HEPA filter.

E. Particulate filters are tested with 200 mg of loading but in many cases, these filters may exceed this capacity. Filtration efficiency may actually increase as the filter cake develops on the filter. Increased resistance to breathing or obvious taste or odor in the respirator would be cause to examine, re-evaluate and replace the filter cartridge

A. Inspection

Routinely used air-purifying and airline respirators should be checked as follows before and after each use:

1. Examine the facepiece for:
    a. Excessive dirt.
    b. Cracks, tears, holes or physical distortions of shape from improper storage.
    c. Inflexibility of rubber facepiece (stretch and knead to restore flexibility).
    d. Cracked or badly scratched lenses in full facepieces.
    e. Incorrectly mounted full facepiece lenses, or broken or missing mounting clips.
    f. Cracked or broken air-purifying element holder(s), badly worn threads or missing gasket(s) if required.
2. Examine the head straps or head harness for:
    a. Breaks.
    b. Loss of elasticity.
    c. Broken or malfunctioning buckles and attachments.
    d. Excessively worn serrations on head harness, which might permit slippage (full facepieces only).
3. Examine the exhalation valve for the following after removing its cover:
    a. Foreign material, such as detergent residue, dust particles or human hair under the valve seat.
    b. Cracks, tears or distortion in the valve material.
    c. Improper insertion of the valve body in the facepieces.
    d. Cracks, breaks or chips in the valve body, particularly in the sealing surface.
    e. Missing or defective valve cover.
    f. Improper installation of the valve in the valve body.
4. Examine the air-purifying element for:
    a. Incorrect cartridge, canister, or filter for the hazard.
    b. Incorrect installation, loose connections, missing or worn gasket or cross threading in the holder.
    c. Expired shelf-life date on the cartridge or canister.
    d. Cracks or dents in the outside case of the filter, cartridge or canister, indicated by the absence of sealing material, tape, foil, etc., over the inlet.
5. If the device has a corrugated breathing tube, examine it for:

a. Broken or missing and connectors.

b. Missing or loose hose clamps.

c. Deterioration, determined by stretching the tube and looking for cracks.

6. Examine the harness of a front-or back-mounted gas mask for:

   a. Damage or wear to the canister holder, which may prevent its being held in place.

   b. Broken harness straps for fastening.

B. Self Contained Breathing Apparatus (SCBA)

Follow manufacturer specifications for storage, maintenance and cleaning of SCBA systems.

C. Manual Cleaning

A generalized cleaning procedure is typically found in the manufacturer's manual. Read the respirator manual and follow the manufacturer's recommendations.

1. Remove canisters, filters, valves, straps and speaking diaphragms from the facepiece.
2. Wash facepiece and accessories in warm soapy water or a commercially available cleaner, following the manufacturer's instructions. Gently scrub the respirator.
3. Rinse parts thoroughly in clean water.
4. Air dry in a clean place or wipe dry with a lint less cloth.

D. Machine Cleaning

Machines may be used to expedite the cleaning, sanitizing, rinsing, and drying of large numbers of respirators. Read the machine-cleaning manual and follow manufacturer's recommendations.

1. Extreme care must be taken to ensure against excessive tumbling and agitation, or exposure to temperatures above those recommended by the manufacturer (normally 120°F maximum), as these conditions are likely to result in damage to the respirators.
2. Ultrasonic cleaners, clothes-washing machines, dishwashers, and clothes dryers have been specially adapted and successfully used for cleaning and drying respirators.

E. Disinfection

1. Disinfection is required when more than one person uses the respirator. Recommended NIOSH disinfection procedures include immersion of the respirator body for two minutes in a 50 ppm chlorine solution (about 2 ml bleach to 1 liter of water). Rinse thoroughly in clean water and dry.

   a. Immersion times have to be limited to minimize damage to respirators. The solutions can age rubber and rust metal parts. Caution must be

taken to thoroughly rinse the respirator after cleaning and disinfection to prevent dermatitis.

b. An alternate method is to purchase a commercially prepared solution for disinfection/decontamination and follow the directions recommended by the manufacturer.

2. Each person wearing a respirator shall examine the respirator before use in accordance with the training and instruction provided during fit testing.
3. After cleaning and sanitizing, each respirator shall be examined to determine if it is in proper working condition, if it needs replacement of parts or repairs, or if it should be discarded. Respirator inspection shall include, when applicable, a check for tightness of connections; for the condition of the respiratory inlet covering, head harness, valves, connecting tubes, harness assemblies, filters, cartridges, canisters, end-of-service life indicator, and shelf life date(s), and for the proper function of regulators, alarms, and other warning systems.
4. Each rubber or other elastomeric part shall be inspected for pliability and signs of deterioration. Each air and oxygen cylinder shall be inspected to ensure that it is fully charged according to the manufacturer's instructions.

F. Repair

Only persons trained in proper respirator assembly and correction of possible respirator malfunctions and defects shall do replacement of parts or repairs. Replacement parts shall be only those designed for the specific respirator being repaired. Reducing or admission valves, regulators, and alarms shall be returned to the manufacturer for repair or adjustment. The valve, regulator, or alarm manufacturer must approve instrumentation for valve, regulator, and alarm adjustments and tests.

G. Storage

Respirators shall be stored in a convenient, clean and sanitary location. The purpose of good respirator storage is to ensure that the respirators will function properly when used. Respirators shall be stored in a manner that will protect them against dust, sunlight, heat, extreme cold, excessive moisture, or damaging chemicals. Respirators shall be stored to prevent distortion of rubber or other elastomeric parts. This can be done by storing the respirators in hermetically sealed plastic bags, or plastic bags capable of being sealed. Emergency and rescue use respirators that are placed in work areas shall be quickly accessible at all times, and the storage cabinet or container in which they are stored shall be clearly marked.

URS SAFETY MANAGEMENT STANDARD

Biological Hazards

1. Applicability

This standard applies to the operations of URS Corporation and its subsidiary companies.

2. Purpose and Scope

The purpose of this standard is to reduce or eliminate illnesses and injuries transmitted by plants, insects, animals, and pathogenic agents.

3. Procedures

The associated implementing regional procedures for this standard are included as attachments:

SMS 047 NA – North America

SMS 047 INT – International Operations (including Europe, Asia, South America and Africa)

SMS AP7-047 – Australia / New Zealandc

URS SAFETY MANAGEMENT STANDARD

Biological Hazards

1. Applicability

This standard applies to URS Corporation and its subsidiary companies where job activities are performed primarily in outdoor environments.

2. Purpose and Scope

The purpose of this standard is to provide information that will help eliminate or reduce illnesses and injuries transmitted by plants, insects, animals, and pathogenic agents. Although there are many animals and insects that are potentially harmful to humans (e.g., bees, spiders, bears, and rodents), this standard focuses on six common biological hazards: ticks, poison plants, mosquitoes, snakes, Valley Fever, and water-borne pathogenic agents. Refer to SMS 051 – Bloodborne Pathogens for additional information.

3. Implementation

Implementation of this standard is the responsibility of the URS manager directing activities of the facility, site, or project location.

4. Requirements

A. Ticks

1. Precautionary Measures

a. Background information: Ticks do not jump, crawl, or fall onto a person. They are picked up when clothing or hair brushes a leaf or other object the tick is on. Ticks are generally found within 3 feet of the ground. Once picked up, they will crawl until they find a likely site to feed. Often they will find a spot at the back of the knee, near the hairline, behind the ears, or at pressure points where clothing presses against the skin (underwear elastic, belts, neckline). The best way to prevent tick-borne diseases is not to be bitten by a tick. Ticks can carry a number of diseases, including the following:

i. *Lyme Disease* is an infection caused by the corkscrew-shaped bacteria *Borrelia burgdorferi* that is transmitted by the bite of deer tick (ixodes) and western black-legged ticks. The disease occurs in the forested areas of North America, Europe, and Asia. Symptoms that occur within 3 to 30 days following a tick bite include: a spreading ‘bulls-eye” rash, fever, fatigue, headache, and joint and muscle aches. Prompt treatment with antibiotics is essential in order to prevent more serious complications that may occur if left untreated.

ii. *Rocky Mountain Spotted Fever* is an infection caused by the bacteria *Rickettsia rickettsii*. The disease occurs in North, Central, and South America. Other Rickettsia organisms cause disease worldwide (Mediterranean, Japan, Africa, North Asia). Symptoms which occur 2-6 days following a tick bite include: fever, nausea, vomiting, diarrhea, rash, muscle and joint pain. The disease is treated with antibiotics.

iii. *Babesiosis* is caused by hemoprotozoan parasites of the genus *Babesia*. It is transmitted by the ixodid tick. The geographic distribution is worldwide. Symptoms include fever, chills, fatigue, muscle aches, and an enlarged spleen and liver. The disease is treated with anti-protozoan drugs.

iv. *Ehrlichiosis* is caused by several bacteria of the genus *Ehrlichiae*. The geographic distribution is global, primarily in temperate regions. Symptoms which occur 5-10 days following a tick bite include fever, headache, fatigue, muscle aches, nausea, vomiting, diarrhea, confusion, and occasionally a rash. The disease is treated with antibiotics.

b. Avoidance of tick habitats

Whenever possible, persons should avoid entering areas that are likely to be infested with ticks, particularly in spring and summer when nymphal ticks feed. Ticks favor a moist, shaded environment, especially which provided by leaf litter and low-lying vegetation in wooded, brushy, or overgrown grassy habitat. Both deer and rodent hosts must be abundant to maintain the life cycle of the tick.

c. Personal Protective Equipment

i. Wear light colored clothing or white Tyvek® to allow you to see ticks that are crawling on your clothing.

ii. Tuck your pant legs into your socks or boots, wear high rubber boots, or use tape to close the opening where they meet so that ticks cannot crawl up the inside of your pant legs.

iii. Wear a hat, and tie back long hair.

iv. Apply repellents to discourage tick attachment. Repellents containing permethrin can be sprayed on boots and clothing, and will last for several days. Repellents containing DEET (n,n-diethyl-m-toluamide) can be applied to the skin, but will last only a few

hours before reapplication is necessary. Apply according to Environmental Protection Agency guidelines to reduce the possibility of toxicity.

d. Tick Check

i. Change clothes when you return from an area where ticks may be located.

ii. Shower to wash off any loose ticks.

iii. Check your entire body for ticks. Use a hand held or full-length mirror to view all parts of your body.

iv. Place clothing worn in tick infested areas into the dryer for at least 30 minutes in order to kill any ticks.

2. Tick Removal

Because it takes several hours of attachment before microorganisms are transmitted from the tick to the host, prompt removal of attached or crawling ticks is an important method of preventing disease. Remember, folklore remedies of tick removal to do not work! Methods such as the use of petroleum jelly or hot matches may actually make matters worse by irritating the tick and stimulating it to release additional saliva or regurgitate gut contents, increasing the chances of transmitting disease.

The best method to remove an attached tick is with a set of fine tipped tweezers.

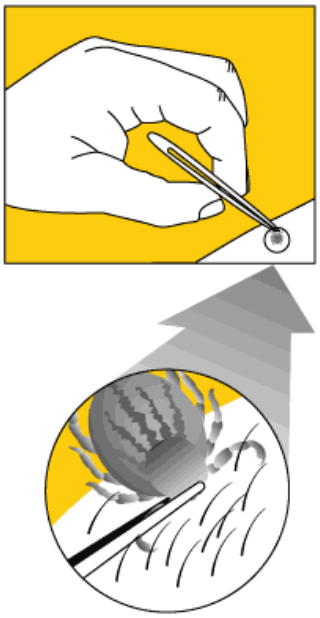

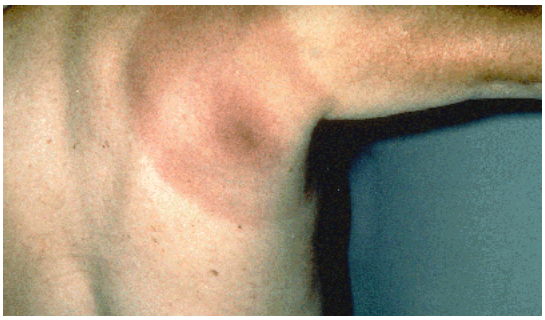

a. Use fine-tipped tweezers. When possible, avoid removing ticks with bare hands.

b. Grasp the tick as close to the skin surface as possible and pull upward with steady, even pressure. Do not twist or jerk the tick; this may cause the mouthparts to break off and remain in the skin. If this happens, remove mouthparts with the tweezers.

c. Do not squeeze, crush, or puncture the body of the tick because its fluids (saliva and gut contents) may contain infectious organisms.

d. After removing the tick, thoroughly disinfect the bite site and wash your hands with soap and water.

e. Disinfect the tweezers.

f. Save the tick for identification in case you become ill. This may help the doctor make an accurate diagnosis. Place the tick in a vial or plastic zip lock bag and put it in the freezer. Write the date of the bite on a piece of paper with a pencil and place it in the bag.

3. Reporting and Medical Follow-Up

Tick bites must be reported and managed in accordance with SMS 049 – Injury/Illness/Incident Reporting and SMS 065 – Injury and Claims Management. In most circumstances, medical treatment of persons who only have a tick bite is not recommended. However, individuals who are

bitten by a tick should seek medical attention if any signs and symptoms of tick-borne disease develop over the weeks following the tick bite.

B. Poisonous Plants

1. Background Information

Poison ivy and poison oak plants are the most common cause of allergic contact dermatitis in North America. These poisonous plants can be a hazard for many various outdoor activities at work, home, and play. Skin contact with the oleoresins (urushiol) from these plants can cause an itchy, red, oozing, blistered rash in sensitive individuals. Oil content in the plants is highest in the spring and summer; however, the plants are even hazardous in the winter when they have dropped their leaves. There are three types of exposure:

a. Direct contact: An initial skin exposure is necessary to “sensitize” the individual. Subsequent contact in a sensitized person will result in a rash appearing within 4 to 48 hours. Approximately 50 to 70 percent of the population is sensitized. Poison plant dermatitis is usually characterized by areas of linear or streaked patches where branches of the plant brushed the skin.

b. Indirect contact: Skin exposure can happen indirectly. Clothing, shoes, tools, personal protective equipment, and other items can be contaminated with the oils and maintain potency for months.

c. Airborne smoke contact: Never burn poison plants. Droplets of oil can be carried by smoke and enter the respiratory system, causing a severe internal outbreak.

Poison plant rash is not contagious. Skin contact with blister fluid from an affected individual will not cause dermatitis in another sensitized person. Scratching the rash can only spread it to other parts of your body if the oil is still on your skin. After the oil has been washed off or absorbed by the skin, scratching will not spread the rash.

The most distinctive features of poison ivy and poison oak are their leaves, which are composed of three leaflets each and are green in the summer and red in the fall. Both plants also have greenish-white flowers and berries that grow in clusters. All parts of these plants are toxic.

Poison Ivy grows as a small plant, vine, and as a shrub. Leaves always consist of three glossy leaflets.

Poison Oak grows as a shrub or vine. It has three leaflets that resemble oak leaves.

Poison Sumac grows as a woody shrub or small tree from 5 to 25 feet tall. It has 7 to 13 leaves that grow opposite each other with a leaflet at the tip. Poison sumac grows in wet soils, typically in swamps and bogs.

Poison Sumac

2. Precautionary Measures

   a. The best approach is to learn to identify the plants and avoid them.

   b. Wear long pants and long sleeves, boots, and gloves.

   c. Barrier skin creams may offer some protection if applied before contact.

d. Avoid indirect contact with tools, clothing, or other objects that have come into contact with a crushed or broken plant. Don't forget to wash contaminated clothing and clean up contaminated equipment.

e. If you can wash exposed skin areas within 3 to 5 minutes with cold running water, you may keep the urushiol from penetrating your skin. Proper washing may not be practical in remote areas, but a small wash-up kit with pre-packaged alcohol-based cleansing tissues can be effective.

3. Reporting and Medical Follow-Up

Exposure to poisonous plants must be reported and managed in accordance with SMS 049 – Injury/Illness/Incident Reporting and SMS 065 – Injury and Claims Management.

Home treatment: Calamine lotion and an oatmeal (1 cup to a tub full of water) bath can help relieve itching. To prevent secondary skin infection, scratching is not helpful, and the finger nails should be cut to avoid damage to the skin. Over-the-counter hydrocortisone cream can decrease inflammation and itching; however, read the label and use according to directions.

When to see the doctor: Severe cases may require further treatment. A physician should be seen if the rash appears infected, is on the face or other sensitive body areas, or is too extensive to be easily treated at home.

C. Mosquito-Borne Diseases

1. Background Information

a. Arboviral encephalitis is a viral illness causing inflammation of the brain, and is transmitted to humans by the bite of infected mosquitoes. Globally, there are several strains, including: Eastern equine, Japanese, La Crosse, St. Louis, West Nile, and Western equine encephalitis. Some of the strains have a vaccine. Symptoms of infection are nonspecific and flu-like: fever, headache, and tiredness. Fortunately, only a small proportion of infected people progress to encephalitis. Treatment is supportive, antibiotics are not effective.

b. Malaria is a serious but preventable disease spread by the bite of an infected anopheline mosquito. It is caused by four species of the parasite *Plasmodium (P. falciparum, P. vivax, P. ovale, and P malariae)*. Malaria-risk areas include primarily tropical areas of Central

and South America, Africa, India, Southeast Asia, and the Middle East. Symptoms of malaria, which occur 8 days to 1 year after infection, include fever, shaking, chills, headache, muscle ache, tiredness, jaundice, nausea, vomiting, and diarrhea. Malaria can be cured with prescription drugs.

c. Dengue Fever is a potentially life-threatening viral illness transmitted by the bite of the Aedes mosquito, found primarily in urban areas. The disease is found in most of tropical Asia, the Pacific Islands, Central and South America, and Africa. There are four dengue virus serotypes. Symptoms include sudden onset, high fever, severe headache, joint and muscle pain, rash, nausea, and vomiting. There is no specific treatment and no vaccine.

d. Yellow Fever is a viral disease transmitted between humans by mosquitoes. It occurs only in Africa and South America. There is a vaccine that confers immunity lasting 10 years or more. Symptoms begin 3 to 6 days after the mosquito bite, and include fever, nausea, vomiting, headache, slow pulse, muscle aches, and restlessness. Treatment is symptomatic.

e. West Nile virus is a viral disease transmitted by mosquitoes. It occurs in North America, Europe, Africa, west and central Asia, and the Middle East. There is no vaccine for West Nile virus. Symptoms include nausea, vomiting, and diarrhea.

2. Precautionary Measures

a. Insect Repellent: Use insect repellants that contain DEET. The effect should last about 4 hours. Always use according to label directions. Use only when outdoors and wash skin after coming indoors. Do not breathe in, swallow, or get into the eyes. Do not put on wounds or broken skin.

b. Protective Clothing: Wear long-sleeved shirts and long pants, especially from dusk to dawn. Avoid going outdoors during these hours.

c. Mosquito netting: Travelers who will not be staying in well-screened or air conditioned rooms should use a pyrethroid-containing flying insect spray in living and sleeping areas during evening and nighttime hours. Sleep under mosquito netting (bed nets) that has been sprayed with permethrin.

d. Malaria prophylaxis medications may be prescribed; however, they do not provide complete protection. The type of medication given depends on the area of travel.

D. Poisonous Snakes

1. Background Information

No single characteristic distinguishes a poisonous snake from a harmless one except the presence of poison fangs and glands. Only in dead specimens can you determine the presence of these fangs and glands without danger. Most poisonous snakes have both neurotoxic and hemotoxic venom; however, one type is dominant and the other is weak.

a. Hemotoxic venom. The folded-fang snakes (fangs can raise to an erect position) have venoms that affect the circulatory system, destroying blood cells, damaging skin tissues, and causing internal hemorrhaging.

b. Neurotoxic venom. The fixed-fang snakes (permanently erect fangs) have venoms that affect the nervous system, making the victim unable to breathe.

c. Poisonous snakes in the Americas: copperhead, coral snake, cottonmouth, and rattlesnake.

d. Poisonous snakes in Europe: adder, viper.

e. Poisonous snakes in Africa and Asia: viper, cobra, adder, green mamba.

f. Poisonous snakes in Australia: copperhead, adder, taipan, tiger snake.

2. Precautionary Measures

Bites occur when you don't hear or see the snake, when you step on them, or when you walk too close to them. Follow these simple rules to reduce the chance of accidental snakebite:

a. Don't put your hands into dark places, such as rock crevices, heavy brush, or hollow logs, without first investigating.

b. Don't step over a fallen tree. Step on the log and look to see if there is a snake resting on the other side.

c. Don't walk through heavy brush or tall grass without looking down. Look where you are walking.

d. Do not pick up any live snake. If you encounter a snake, walk around the snake, giving it plenty of room. A snake can strike half its length.

e. Don't pick up freshly killed snakes without first severing the head. The nervous system may still be active and a dead snake can deliver a bite.

3. Reporting and Medical Follow-Up

Snake bites must be reported and managed in accordance with SMS 049 – Injury/Illness/Incident Reporting and SMS 065 – Injury and Claims Management.

If you are bitten by a snake, the primary goal is to get to a hospital as soon as possible to receive professional medical evaluation, and possible treatment with anti-venom if warranted. Initial first aid should include: Washing the bite with soap and water; immobilizing the bitten area and keeping it lower than the heart. Try to remain calm. If you are unable to reach a hospital within 30 minutes, a bandage, wrapped 2 to 4 inches above the bite, may help slow the venom. The bandage should not cut off blood flow from a vein or artery; make sure the bandage is loose enough that a finger can slip under it.

Research has shown the following to be potentially harmful: DO NOT apply ice, use a tourniquet, or make incisions into the wound.

E. Valley Fever

1. Background Information

Valley Fever is an illness that results from exposure to a fungal spore (*Coccidioides immitis*). It is endemic to the San Joaquin Valley in California, as well as areas of the Southwestern U.S., Mexico, and Central and South America, although it has been found in many other areas. It is particularly associated with arid soils that are not cultivated. Exposure is generally by inhalation of spores, though it may also enter through broken skin. Approximately 2 weeks after inhalation exposure, severe weakness and flu-like symptoms develop; severe pneumonia may occur. It may also affect the brain, bones, and joints causing disability, spinal meningitis, or death. Dermal forms of the infection can form disfiguring fungal lesions.

2. Precautionary Measures

Because it is associated with arid soils, personnel should avoid locations and activities that create dust. Persons at risk of exposure include

geologists, surveyors, excavators, archaeologists, etc. Dust suppression methods should be employed and the use of particulate respirators should be considered for areas known to harbor the fungus. At one phase of the fungus' life cycle, cottony, spider-web–like growths may be seen on the soil surface. If observed, these growths must not be disturbed, and work should be relocated if possible.

3. Reporting and Medical Follow-up

   Exposure to fungal spores must be reported and managed in accordance with SMS 049 – Injury/Illness/Incident Reporting and SMS 065 – Injury and Claims Management.

   Approximately 60 percent of exposed persons will not have symptoms. Persons that have been in areas associated with Valley Fever should be alert to the development of flu-like symptoms, fatigue, or skin rashes 2 to 4 weeks later. Valley Fever can be treated with anti-fungal medication. Early treatment is critical, as disseminated forms of the disease can result in chronic disease or death.

F. Pathogenic organisms

1. Background Information

   Employees who perform certain activities, such as disaster response, may be in areas where water-borne pathogens may be present. A partial list of agents includes: E. coli, Hepatitis A, typhoid, and cholera. Chemical hazards and molds and fungus may also be present. Refer to SMS 051–Bloodborne Pathogens for additional information.

2. Precautionary Measures

   All work must be performed within the scope of either a Health and Safety Plan or Safe Work Plan that identifies the task hazards, and specifies appropriate controls. A medical exam and/or inoculations may be required. See SMS 024 – Medical Screening and Surveillance, or contact the Occupational Health Manager for assistance.

   Where contact with water or wet materials may occur, personnel must use protection such as impervious coveralls, boots/waders, faceshields, etc, as specified in the project Health and Safety Plan or Safe Work Plan. Personnel must protect any areas of broken skin, eyes, nose, and mouth from contact with potentially infectious materials, and practice good personal hygiene before eating, drinking, etc.

3. Reporting and Medical Follow-up

   Exposure to pathogenic organisms must be reported and managed in accordance with SMS 049 – Injury/Illness/Incident Reporting and SMS 065 – Injury and Claims Management.

   Medical evaluation and/or an inoculation schedule may be required prior to beginning work. Because early evaluation and treatment is more successful, personnel should be alert to signs and symptoms of possible pathogenic organisms and seek prompt medical evaluation if illness develops or is suspected.

G. Natural disaster relief efforts

1. Natural disaster relief efforts present a variety of hazards, including biological hazards. Biological hazards potentially encountered during relief efforts include mold, sewage-contaminated water, various building materials that may puncture the skin and create various types of infections, and displaced animals and insects. Before work begins, each disaster relief site should be evaluated for the various types of biological hazards that may be encountered. Control measured must be developed to address the biological hazards.

5. Documentation Summary

Complete and distribute a URS Incident Report form 049-1 for all work-related biological exposure incidents.

6. Resources

A. Centers for Disease Control http://www.cdc.gov

B. U. S. Occupational Safety and Health Administration http://www.osha.gov

C. U.S. Food and Drug Administration - Treating and Preventing Venomous Snake Bites
http://www.fda.gov/fdac/features/995_snakes.html

D. ENature – Identify plant and animals hazards in a specific area.
http://enature.com/zipguides/index.asp?choice=poisonous

E. SMS 051 – Bloodborne Pathogens

F. SMS 024 – Medical Screening and Surveillance

G. SMS 049 – Injury / Illness / Incident Reporting & Notifications

H. SMS 065 – Injury and Claims Management

I. ORC Pandemic Planning Guide

URS SAFETY MANAGEMENT STANDARD

Hazardous Materials/Dangerous Goods Shipping

1. Applicability

This standard applies to operations of URS Corporation and its subsidiary companies.

2. Purpose and Scope

This purpose of this standard is to provide a framework for compliance with the requirements of the U.S. Department of Transportation (DOT) 49 CFR and the International Air Transportation Association (IATA) for shipping hazardous materials/dangerous goods by land or air.

3. Procedures

The associated implementing regional procedures for this standard are included as attachments:

SMS 048 NA – North America

SMS 048 INT – International Operations (including Europe, Asia, South America and Africa)

SMS AP7-048 – Australia / New Zealand

URS SAFETY MANAGEMENT STANDARD

Hazardous Materials/Dangerous Goods Shipping

1. Applicability

This standard applies to URS Corporation (URS) and its subsidiary companies that ship hazardous materials (hazmat).

U.S. Department of Transportation (DOT) regulations for hazardous materials shipping (by air, ground, or water) and the International Air Transportation Association (IATA) regulations for dangerous goods shipping (by air) prohibit the shipment of certain materials unless they are packaged, marked, labeled, and accompanied with shipping documentation in a specified manner. Failure to adhere to these shipping requirements may result in fines to the company and disciplinary action to the employee(s) involved in the shipment.

Examples of Hazardous Materials/Dangerous Goods regulated by the DOT and IATA that may be encountered or used during URS projects may include, but are not limited to, certain field environmental samples, compressed gases (fire extinguishers, calibration gases, compressed air, and welding and cutting gases), ionizing radiation sources used to calibrate detection equipment or analytical equipment, nuclear-density meters, laboratory reagents, hazardous wastes, materials used for bench-scale and pilot plant operations, oils, greases, lubricating fluids, cleaning solvents, degreasing solvents, paints, spray paints, paint removers and/or strippers, diesel fuel, gasoline, pesticides, inks, glues, and other adhesives, battery fluids, ammonia cleaning solutions and peroxide solutions. When possible, only use ground carriers for transportation of hazardous materials.

The air shipment of environmental samples represents a significant percentage of hazardous materials/dangerous goods shipped by URS. Although most environmental samples (both water and soil) do not meet the definition of hazardous, extreme care must be taken to properly classify materials.

2. Purpose and Scope

The purposed of this standard is to prevent shipping-related incidents and violations, and prevent injuries to employees and members of the public.

3. Implementation

Implementation of this standard is the responsibility of the URS manager directing activities of the facility, site, or project location.

Project Managers' responsibilities include the following related to hazardous materials shipping:

A. Ensure that every employee and driver involved with shipping a hazardous material in commerce is trained and certified, and records are maintained in accordance with 49 Code of Federal Regulations (CFR) 172.704.

B. Ensure every driver of a truck that has a gross vehicle weight rating exceeding 26,000 pounds (11.8 kg), or as mandated by state, or hauling a placardable quantity of hazmat has a commercial driver's license (CDL) with proper endorsements (e.g., hazmat, tank, etc.) in accordance with 49 CFR 383.91 and 383.93, and has current DOT hazmat training in all required areas, in accordance with 49 CFR 172.704 and 177.816.

C. Ensure every truck hauling hazmat in regulated quantities carries a current DOT Hazardous Materials Certificate of Registration; and if required, a Federal Motor Carrier Safety Administration (FMCSA) Hazardous Materials Safety Permit and any other state-mandated registration.

D. Verify that insurance coverage includes transportation of hazardous materials over commercial roads (49 CFR 387.9).

E. Ensure every truck hauling hazmat has the proper documentation, including shipping paper, emergency response information, 24-hour emergency response telephone number, and the DOT Hazardous Materials Registration (if required). In addition, when using a third-party emergency response provided such as CHEMTREC, a Customer Contract Number (CCN#) must appear on the shipping paper.

F. If using CHEMTREC as the 24-hour emergency number, ensure that current Safety Data Sheets (SDSs) for each transported hazmat are submitted to CHEMTREC before transport.

G. Ensure all hazmat incidents are properly reported to the project safety supervisor, in accordance with URS reporting procedures.

H. Report hazardous material spills within 24 hours, including material spilled and estimated quantity.

4. Requirements

In order to minimize the potential for an improper shipment, Project Managers and Site Managers are required to ensure that an individual trained according to DOT Regulations in 49 CFR 172 Subpart H and, if applicable, IATA Dangerous Goods Regulations Subsection 1.5 is responsible for the correct classification, packaging, marking, labeling, and completion of shipping papers for any hazardous materials being shipped offsite. No hazmat shipments shall leave the site without prior inspection. The assigned person must have current DOT

hazmat certification and, if applicable, IATA certification. DOT requires recurrent training every 3 years, and IATA requires recurrent training every 2 years.

A. Staffing

1. Each project or site must ensure that DOT hazmat-trained individuals are involved in the process of preparing hazardous materials for shipment.

2. Each location where hazardous material shipping occurs or where hazardous material employees are assigned must identify a local or regional shipping specialist.

3. The assigned shipping specialist must have current certification of DOT hazmat, and if applicable, IATA training.

B. Hazmat Hotline

URS maintains a **shipping Hazmat Hotline** for hazardous materials/dangerous goods to provide answers to specific shipping questions.

1. **800-381-0664** in Canada and U.S.

2. **919-461-1227** for other countries

3. **Email: HazmatHotline@urs.com**

C. Shipper Training

All employees involved in the transportation of hazmat in commerce must be formally trained and certified in accordance with 49 CFR 172.704. Training must include the following components: general awareness, function-specific, safety, hazmat security, security plan (if applicable), and if applicable, driver training.

1. Training Requirements. Require employees who package, prepare paperwork, load and/or unload, and transport hazardous materials be trained to the appropriate level of activity:

   a. Training is required prior to performing hazardous material shipping activities.

   b. Training is required when regulatory changes impact current procedures, and every 2 years (IATA) or 3 years (DOT).

c. Regional or local hazmat shipping specialists must complete a 2-day hazardous material/dangerous goods shipping course conducted by URS, or complete an outside equivalent course.

d. Drivers may be exempt from function-specific training if the DOT's Materials of Trade (MOT) exception applies to the shipment (see Section 4.K.6 and SMS 048 NA, Supplemental Information A).

e. Certain shipments of hazmat must have a Hazardous Materials Security Plan (see Section 4.I for more information).

2. Training Records. Employers are required to maintain training records for all hazmat employees during employment, and for 90 days after, including:

a. Hazmat employee's name;

b. Completion date of most recent training;

c. Training materials (copy, description, or location);

d. Name and address of hazmat trainer; and

e. Certification that the hazmat employee has been trained and tested.

D. Hazmat Driver Training

1. In addition to the training required by 49 CFR 172.704 (above), hazmat drivers must also be trained in the requirements of 49 CFR 177.816, or have a CDL with a hazmat endorsement.

2. CDL requirements are located in 49 CFR 383.

E. Hazmat Registration

1. Shippers or carriers who offer any of the following in commerce must have a hazmat registration in accordance with 49 CFR 107.601-620:

a. Any highway route–controlled quantity of a Class 7 (radioactive) material;

b. More than 55 pounds (25 kilograms) of a Division 1.1, 1.2, or 1.3 (explosive) material in a motor vehicle, rail car, or freight container;

c. More than 1 liter (1.08 quarts) per package of a material extremely toxic by inhalation (i.e., “material poisonous by inhalation,” as defined in 49 CFR 171.8, that meets the criteria for “hazard zone A,” as specified in 49 CFR 173.116(a) or 173.133(a));

d. A hazardous material in a bulk packaging having a capacity of 3,500 gallons for liquids or gases, or more than 468 cubic feet of solids;

e. A shipment in other than bulk packaging of 5,000 pounds gross weight or more of one class of hazardous material for which the transport vehicle requires placarding for which placarding of a vehicle, rail car, or freight container is required for that class; and

f. Except for certain farm-related activities, any quantity of materials requiring placarding.

   In general, this includes Company fuel and lube trucks that travel on public roads.

2. The vehicle must keep a copy of the current Certificate of Registration in each truck used to transport hazmat.

3. In addition, a copy of the registration statement filed with the DOT and the Certificate of Registration must be maintained at the principal place of business for a period of 3 years.

4. This registration must be renewed each year.

F. FMCSA Hazardous Materials Safety Permits

1. Since January 2005, certain highway carriers of hazmat must obtain a hazmat safety permit from the FMCSA as required under 49 CFR 385.403, 390.3, and 390.19. In general, a safety permit is required if a motor carrier transports any of the following:

   a. A highway route–controlled quantity of a Class 7 (radioactive) material;

b. More than 55 pounds (25 kilograms) of a Division 1.1, 1.2, or 1.3 (explosive) material or an amount of a Division 1.5 (explosive) material requiring placarding;

c. More than 1.08 quarts (one liter) per package of a “material poisonous by inhalation,” that meets the criteria for “Hazard Zone A.”

d. A “material poisonous by inhalation” that meets the criteria for “Hazard Zone B ” in a bulk packaging (capacity greater than 119 gallons [450 liters]);

e. A “material poisonous by inhalation” in a ”bulk packaging,” both defined in 49 CFR 171.8, that meets the criteria for “Hazard Zone C or “Hazard Zone D” in a packaging having a capacity equal to or greater than 3,500 gallons (13,248 liters); or

f. A shipment of compressed or refrigerated liquefied methane or liquefied natural gas, or other liquefied gas with a methane content of at least 85 percent, in a bulk packaging having a capacity equal to or greater than 3,500 gallons (13,248 liters).

G. Shipping Papers

1. With few exemptions, anyone who offers a hazmat for transportation must complete shipping papers that must be carried in the vehicle, within the driver’s immediate reach when restrained by a seat belt, and visible to a person entering the vehicle, or in a holder mounted on the inside of the driver’s door (49 CFR 172, Subpart C; and 49 CFR 177.817).

2. Shippers must retain copies of shipping papers for at least 2 years after the transporter accepts the material (49 CFR 172.201).

3. A motor carrier using a shipping paper without change for multiple shipments of one or more hazardous materials having the same shipping name and identification number may retain a single copy of the shipping paper, instead of a copy for each shipment made, if the carrier also retains a record of each shipment made, to include shipping name, identification number, quantity transported, and date of shipment.

4. Shippers and transporters of hazardous waste (as defined in 40 CFR 261) must retain copies of hazardous waste manifests for at least 3 years after the initial carrier accepted the material.

5. Upon request, hazmat shipping papers and hazardous waste manifests must be made available to federal, state, and local inspectors.

H. Emergency Response Information

1. DOT requires anyone who offers, transports, or handles hazmat to have emergency response information immediately available. (49 CFR 172.600). Safety Data Sheets (SDSs) and DOT's Emergency Response Guidebook are common reference sources for emergency response information.

2. In addition, persons who offer hazmat for transportation must provide a 24-hour emergency response telephone number that must be monitored by a knowledgeable person at all times while the material is in transit.

3. URS maintains an account with CHEMTREC for this service. Before using this service, URS must submit an SDS or Waste Safety Data Sheet to them. Contact the Hazmat Hotline (see Section 4.B) for more information.

I. Hazardous Material Transportation Security Plan

1. URS sites that transport or offer the following types or quantities of materials for transportation must have a Hazardous Material Transportation Security Plan on site and must ensure that all hazmat employees are trained in the plan, as required by 49 CFR 172.800.

   a. Any quantity of a Division 1.1, 1.2, or 1.3 material;

   b. A quantity of a Division 1.4, 1.5, or 1.6 material requiring placarding in accordance with subpart F;

   c. A large bulk quantity of Division 2.1 material;

   d. A large bulk quantity of Division 2.2 material with a subsidiary hazard of 5.1;

   e. Any quantity of a material poisonous by inhalation, as defined in 49 CFR 171.8;

   f. A large bulk quantity of a Class 3 material meeting the criteria for Packing Group I or II;

g. A quantity of desensitized explosives meeting the definition of Division 4.1 or Class 3 material requiring placarding in accordance with subpart F;

h. A large bulk quantity of a Division 4.2 material meeting the criteria for Packing Group I or II;

i. A quantity of a Division 4.3 material requiring placarding in accordance with subpart F;

j. A large bulk quantity of a Division 5.1 material in Packing Groups I and II; perchlorates; or ammonium nitrate, ammonium nitrate fertilizers, or ammonium nitrate emulsions, suspensions, or gels;

k. Any quantity of organic peroxide, Type B, liquid or solid, temperature controlled;

l. A large bulk quantity of Division 6.1 material (for a material poisonous by inhalation see paragraph (e) above);

m. A select agent or toxin regulated by the Centers for Disease Control and Prevention under 42 CFR 73 or the United States Department of Agriculture under 9 CFR 121;

n. A quantity of uranium hexafluoride requiring placarding under 49 CFR 172.505(b);

o. International Atomic Energy Agency (IAEA) Code of Conduct Category 1 and 2 materials including Highway Route Controlled quantities as defined in 49 CFR 173.403 or known radionuclides in forms listed as RAM-QC by the Nuclear Regulatory Commission;

p. A large bulk quantity of Class 8 material meeting the criteria for Packing Group I.

2. If a project or office determines that a hazmat security plan is required, contact the URS Hazmat Hotline.
3. A Hazmat Security Specialist will be assigned at each site required to have a hazmat security plan.
4. All Hazmat Security Plans will be reviewed annually and updated if required.

J. Hazardous Incident Report

1. A person in possession of a hazmat at the time of a reportable incident as outlines in 49 CFR 171.15 must immediately report the incident to the National Response Center. In addition, these incidents require filing a detailed written incident report within 30 days of the incident (see 49 CFR 171.16).

2. Incidents that do not trigger the immediate reporting as outlined in 49 CFR 171.15, but which meet any of the other incident criteria in 49 CFR 171.16 still warrant a detailed written report under 171.16 within 30 days of the incident.

3. All hazmat incidents must be reported in accordance with SMS 049 – Injury/Illness/Incident Reporting & Notifications.

K. General Procedures

1. Select the best way to ship the hazardous material based on the quantity, hazard(s), and mode of transportation (e.g., air, land, water).

2. Ensure shipping containers are designed, constructed, filled, closed, secured and maintained so that, under normal conditions of handling and transport, there will be no accidental release of hazardous materials which could endanger public safety.

3. Ensure that a copy of the closure instructions provided by the package manufacturer is available for each UN specification shipping container type that is used at the facility.

4. Package, mark, label, and placard according to applicable regulations.

5. Complete the shipping documentation according to applicable regulations, which may include bill of lading, shipper's declaration, hazardous waste manifest, or other, as applicable.

6. Follow hazard communication requirements:

   a. Send a copy of the appropriate Emergency Response Guidebook page or MSDS with each shipment.

b. Include the 24-hour emergency response phone number (CHEMTREC 800-262-8200 domestic; 1-703-741-5500 international) on the shipping paperwork.

i. Any shipment of a hazardous material or hazardous waste requires that CHEMTREC be notified in advance of the shipment. CHEMTREC requires that either an SDS or Hazard Profile of the hazardous material being offered for shipment be provided to CHEMTREC. URS maintains a current contract with CHEMTREC to provide this required service and the right to use the CHEMTREC emergency phone number on shipping papers when notification of the shipment has been made. Contact the Hazmat Hotline (see Section 4.B) before contacting CHEMTREC.

7. URS also maintains current Hazardous Materials Certificate of Registrations with the U.S. Department of Transportation. Contact the Hazmat Hotline for more information.

8. DOT regulations include a "Materials of Trade" or "MOTs" exception. MOTs are hazmat, other than hazardous waste, that are carried on a motor vehicle:

- to protect the health and safety of the motor vehicle operator or passengers, such as insect repellant or a fire extinguisher;
- to support the operation or maintenance of a motor vehicle (including its auxiliary equipment), such as a spare battery or gasoline; or
- to directly support a principal business of a private motor carrier (including vehicles operated by a rail carrier) that is other than transportation by motor vehicle – for example, landscaping, pest control, painting, plumbing, or welding services.

URS operations may qualify under this exception. Refer to the exception requirements under 49 CFR 173.6. A hazmat-trained employee should make the determination as to whether this exception will apply to the shipment.

L. Special Requirements

1. Do not offer packages for shipment without knowing the contents and classifying the packages in accordance with the DOT, and, if applicable, IATA regulations. Do not ship potentially hazardous

materials using an unknown carrier or broker. A Hazardous Material Transportation Security Plan may be required for shipment of certain hazardous materials, and employee training is required to protect shipments of hazardous materials from theft and acts of terrorism.

2. Contact the applicable shipping company, shipping specialist, or the Hazmat Hotline if you are unsure or suspect there may be additional special requirements on a shipment.

3. Some transporters have more stringent requirements than DOT or IATA. For example, the United Parcel Service (UPS) publishes its own Guide for Shipping Ground and Air Hazardous Materials. URS shipping training and this program may not meet these additional requirements.

4. Some countries have more stringent requirements than DOT or IATA. Refer to the international hotline for assistance.

5. For international shipments, an expediter may be required to ensure needed materials are not held in customs. It may be advisable to purchase hazardous materials in the destination country.

6. The air shipment of environmental media samples represents a large percentage of potential hazardous materials/dangerous goods shipped by URS. Most environmental media samples (water and soil) typically do not meet the definition of a dangerous good (hazardous material) unless preservatives are added to make the sample a corrosive material. DOT exemptions may apply to allow air shipment as long as the samples are properly packaged and the package is properly marked; however, extreme care must be taken to properly classify, package, and mark the environmental samples to ensure compliance with the regulations.

7. Because more stringent requirements apply to air shipments, ground shipment (e.g., including use of a lab courier service) should be considered first for hazardous materials shipping.

8. Hazardous materials shipments must be loaded and secured in an appropriate shipping container (see 4.K.2 for additional information). The shipping container must also be loaded and secured on the means of transportation used for shipping in such a way as to prevent, under normal means of transport, damage to the

shipping container or to the means of transportation that could lead to an accidental release of the hazardous materials.

9. Where an accidental release of hazardous materials from its packaging/containment in excess of a prescribed quantity or concentration occurs or is imminent, any person who at the time has the charge, management or control of the means of containment shall report the occurrence or imminence of the release to the project safety supervisor. Every person required to make a report shall, as soon as possible in the circumstances, take all safe and reasonable emergency measures to reduce or eliminate any danger to public safety that results or may reasonably be expected to result from the release using the Safety Data Sheets (SDSs), DOT's Emergency Response Guidebook, or other resources as appropriate.

5. Documentation

The following documentation will be maintained in the project files:

A. Training Records

1. Employers are required to maintain training records for all hazmat employees during employment and for 90 days after, including hazmat employee's name; completion date of most recent training; training materials (copy, description, or location); name and address of hazmat trainer; and certification that the hazmat employee has been trained and tested. Ensure training records include:

   a. Hazmat employee's name;

   b. Completion date of most recent training;

   c. Training materials (copy, description, or location);

   d. Name and address of hazmat trainer; and

   e. Certification that the hazmat employee has been trained.

B. Shipping Documentation Records

1. Shippers must retain copies of shipping papers for at least 2 years after the transporter accepts the material. Shippers and transporters of hazardous waste must retain copies of hazardous

waste manifests for at least 3 years after the initial carrier accepted the material.

2. For each shipment:

   a. Copy of shipper's declaration for dangerous goods;

   b. Copy of applicable ERG or ~~M~~SDS accompanying shipment;

   c. Copy of information (MSDS or Hazard Profile) provided to CHEMTREC; and

   d. Supporting documentation related to the classification of the material.

C. Hazardous Materials Transportation Security Plan, if required and applicable to site or facility operations.

D. Hazardous Incident Report(s), if reportable incident(s) has occurred.

6. Resources

A. 49 Code of Federal Regulations, Parts 171-180, Subchapter C – Hazardous Materials Regulations

B. International Air Transport Association Dangerous Goods Regulations (DGR), updated and issued annually

C. International Maritime Dangerous Goods Code. International Maritime Organization, Amendment 29-98

D. DOT Office of Hazardous Materials Safety

E. URS Hazardous Materials Hotline: **800-381-0664**

F. SMS 049 – Injury/Illness/Incident Reporting & Notifications

7. Supplemental Information

A. Materials of Trade Summary

The Department of Transportation (DOT) "Materials of Trade" or "MOTs" exception applies to hazardous materials, other than hazardous waste, that are carried on a motor vehicle for one of the following purposes:

- to protect the health and safety of the motor vehicle operator or passengers, such as insect repellant or a fire extinguisher;
- to support the operation or maintenance of a motor vehicle (including its auxiliary equipment), such as a spare battery or gasoline; or
- to directly support a principal business of a private motor carrier (including vehicles operated by a rail carrier) that is other than transportation by motor vehicle – for example, landscaping, pest control, painting, plumbing, or welding services.

Some URS activities (e.g., environmental sampling and other field services), may be able to use this exception. The exception is found in the Code of Federal Regulations at 49 CFR 173.6. A hazmat-trained employee should make the determination as to whether this exception will apply to the shipment.

The MOTs exception allows URS Corporation employees to transport certain amounts of chemicals aboard their vehicles without preparing shipping papers, emergency response information, placarding, or formal training.

MOTs must be packaged in the manufacturer's original packaging, or a packaging of equal or greater strength or integrity. Gases must be in DOT specification cylinders. If the inner container (such as the bottle) is secured against movement inside the vehicle (if it is kept in a cabinet or tool box), then no outer packaging (such as a cardboard box) is required. The MOT must be marked with a common name or the technical name.

No hazardous material training is required, except that the driver must have general knowledge of the MOT regulations, quantity limitations, packaging requirements, and marking and labeling requirements. The driver is not allowed to exceed total aggregate weight of 440 pounds of MOTs aboard the vehicle.

The hazardous material classes and quantities of hazmat items typically transported by URS field can be transported as MOTs:

- The inner container of a Packing Group II and III material in Class 3, 8, 9, Division 4.1, 5.1, 5.2, 6.1, or ORM-D cannot exceed 66 pounds or 8 gallons each.
- A Division 2.1 or 2.2 cylinder cannot exceed 220 pounds.
- The inner container of a Packing Group II or II material in Division 4.3 cannot exceed 1 ounce.

URS SAFETY MANAGEMENT STANDARD

Incident Reporting, Notifications, and Investigation

1. Applicability

This standard applies to the operations of URS Corporation and its subsidiary companies.

2. Purpose and Scope

The purpose of this standard is to provide guidance for the timely reporting of work-related injuries, illness, and incidents. This procedure also defines incident notification and investigation procedures. For incidents involving motor vehicles, the reporting and notification requirements of SMS 057 – Vehicle Safety Program will also apply.

3. Procedures

The associated procedures for this standard are included as attachments:

SMS 049 NA – North America

SMS 049 INT – International Operations (including Europe, Asia, South America and Africa)

SMS AP11-066 – Australia / New Zealand

URS SAFETY MANAGEMENT STANDARD

Incident Reporting, Notifications, and Investigation

1. Applicability

This standard applies to the operations of URS Corporation (URS) and its subsidiary companies.

2. Purpose and Scope

The purpose of this standard is to provide guidance for the timely reporting of work-related injuries, illness, and incidents. This procedure also defines incident notification and investigation procedures. For incidents involving motor vehicles, the reporting and notification requirements of SMS 057 – Vehicle Safety Program, will also apply.

Substance abuse testing may be required after an incident occurs. Consult the division-specific substance abuse testing requirements; and if applicable, client/project contract documentation.

Refer to Supplemental Information A – Definitions, in this standard for clarification on the meaning of terminology.

3. Implementation

Implementation of this standard is the responsibility of the URS manager directing activities of the facility, site, or project location.

4. Requirements

A. Reporting: All employees must immediately notify their appropriate level of management (line, project, and/or office) of a reportable incident. A reportable incident includes the following:

1. An injury or illness to any URS employee or subcontractor, even if the injury does not require medical attention.
2. An injury to a member of the public, or clients, occurring on a URS-controlled work site.
3. Work-related illness resulting from suspected chemical or biological exposure.
4. Re-occurring conditions such as back pain or cumulative trauma disorders (e.g., carpal tunnel syndrome).
5. Fire or explosion.

6. Natural or man-made disasters which result in property damage or injury.

7. Any vehicle incident occurring on site, while traveling to or from client locations, or with any company-owned, rented, or leased vehicle (including personal vehicles used for company business). If the vehicle incident involves injury, complete both the Incident Report Form (Attachment 049-1 NA) and Auto Claim Report (Attachment 057-1 NA). If the vehicle incident does not involve injuries, complete Attachment 057-1 NA.

8. Property damage resulting from any URS or subcontractor activity.

9. Unexpected release or imminent release of a hazardous material including spills during transport on public highways. Hazardous material releases require notification to Division Legal (or Insured Litigation) within 24 hours including identification of chemical(s) released and estimated quantity and the URS HAZMAT Hotline – **800-384-0664** for hazardous chemical spills during transportation. Refer to SMS 048 NA for additional information.

10. Unexpected chemical exposures to workers or the public. (This may require notification to the Environmental Protection Agency or Local/State Emergency Response Authorities according to site/project Emergency Preparedness Plan.)

11. A safety-related complaint from the public regarding URS activities.

12. Incidents that could result in adverse public media interest concerning URS or a URS project.

13. Any incident that could or does result in an actual investigation by state, federal, provincial, or local regulatory or law enforcement agencies.

14. Any other significant occurrence that could impact safety, including a near-miss.

Note: A near-miss is defined as an incident having the potential to cause injury or property damage as listed above, but did not. An example of a near-miss includes: a worker steps off a ledge, falls 3 feet (1 meter) to the floor, and is uninjured.

B. Actions: Take the actions listed below following a reportable incident:

1. Employees:

   a. If necessary, suspend operations and secure and/or evacuate the area according to your site Emergency Preparedness Plan.

   b. Immediately notify your supervisor and/or project manager. If the site has a Safety Committee or Floor Warden team, also notify a member of this team and follow instructions accordingly. Many members of Safety Committees and Floor Warden team are trained in First Aid/CPR as well as site and project emergency preparedness procedures.

   c. Contact appropriate emergency services according to your site Emergency Preparedness Plan and obtain medical attention as required, or as directed by your supervisor. For additional information, refer to SMS 065 – Injury and Claims Management.

   d. For a near miss occurring in Energy & Construction or Federal Services, contact the Safety Manager who will enter the information into G-SMART. For a near miss occurring in Infrastructure & Environment, employees shall enter near miss information into the Near Miss/Observation database.

   e. Do not discuss the incident with members of the news media or legal representatives (except URS legal counsel or your personal legal advisor) unless directed to do so by URS management.

   f. Do not make statements pertaining to guilt, fault, or liability.

   g. Complete and sign a Statement Form (included in Attachment 049-1).

2. Line/Project Management Responsibilities

   a. If an incident occurs on a client-controlled site, Project Management will ensure that appropriate client notifications are made within the required time frames. These notification requirements will be documented in project-specific planning documents (e.g., IMT, Emergency Preparedness Plan).

b. Review circumstances (i.e., who, what, when, where, and how) of the incident within 7 working days with applicable employee(s) to determine apparent causes, and to develop recommended corrective actions.

c. Discuss the circumstances surrounding the incident, and corrective actions taken, with department or project staff. In some cases, Legal may direct that discussions and communications be limited by Attorney-Client protection.

3. Local Office or Project Safety Representative

a. Record information pertaining to the incident (e.g., time, date, location, name and company of person(s) involved, witnesses, description of event, and actions taken.

Energy & Construction and Federal Services must enter the incident information into G-SMART within 24 hours of the incident. Infrastructure & Environment employees must submit Attachment 049-1 NA to incidentreport@urs.com within 24 hours of the incident.

Information from the Incident Report Form may be used by our workers' compensation third-party administrator to prepare a First Report of Injury (FROI) to meet regulatory requirements. Financial penalties might be assessed by state or federal agencies for delayed reports. Refer to SMS 065 – Injury and Claims Management, for additional information.

b. Drug and alcohol testing shall be performed in accordance with the division drug and alcohol (substance abuse) testing program.

c. Assist with incident evaluation and investigation as directed by management. Investigations shall be completed within 7 working days of an incident.

d. With management, identify cause(s) of the incident and identify corrective actions needed to avoid recurrence.

e. Review injury/incident report or the near-miss report for completeness and accuracy. Ensure the reports are distributed properly.

f. Ensure that the injured employee is properly counseled/advised as directed by SMS 065 – Injury and Claims Management. In cases of fatalities and large scale natural or man-made disasters, professional counselors from the URS Employee Assistance Program (EAP) will be utilized as directed by the site Human Resources department.

g. Implement corrective actions as directed by management.

4. Occupational Health Manager (OHM) / Claims Manager

   a. Manage work-related injuries and illness with the workers' compensation third-party administrator/carrier.

   b. Ensure that the employee's injury is managed in accordance with SMS 065 – Injury and Claims Management. Provide guidance for the affected office, project, and/or safety representative.

5. Safety Management

   a. The OHM (Infrastructure & Environment and Federal Services) or Operating Group Safety Director (Energy & Construction), with input from the appropriate Safety Manager, will review all reported incidents to determine U.S. Occupational Safety and Health Administration (OSHA)/Mine Safety and Health Administration (MSHA) reporting and recording requirements. For a determination of recordability for cases in which the recordable classification is unclear, the Vice President of Safety will make the final determination. All decisions will be based strictly on current OSHA/MSHA recordkeeping regulations.

   b. Where an incident has resulted in an injury or illness, and that injury or illness is determined to be recordable in accordance with OSHA/MSHA recordkeeping requirements, the OHM (Infrastructure & Environment and Federal Services) or site/project Safety Manager (Energy & Construction) shall enter pertinent information related to the case into URS' recordkeeping documents/databases no later than 7 working days after receiving information that the event occurred.

c. Each January, the OHM (Infrastructure & Environment and Federal Services) or site/project Safety Manager (Energy & Construction) will prepare and distribute the appropriate government injury/illness. These reports will summarize all required government information for incidents that occurred at the job site, plant, or project office during the preceding calendar year.

   For Energy & Construction, reports, where required by regulation, will be signed by an officer of the company or the highest ranking company official at a site or project (usually the office or project manager). For Federal Services & Infrastructure & Environment, reports will be signed by an officer of the company.

6. Fatalities and Serious Incidents

   a. Immediately notify URS management by telephone (or other direct means) in the order listed below for incidents involving a URS employee or subcontractor: death, inpatient hospitalization, amputation of a leg, arm, hand, or foot, (not a finger or toe), burns to a major portion of the body, loss of sight in an eye, or equipment damage valued at more than $100,000 (USD). (Refer to the Division or Operating Group reporting procedures for required contacts and notification times.)

      i. Appropriate senior leadership for the affected program.

      ii. Division Vice President of Safety.

      iii. Notifications in accordance with the applicable Crisis Management Plan or IMT /Emergency Preparedness Plan.

   b. The Vice President of Safety will notify the URS Management Committee and the Vice Presidents of Safety for the other URS divisions.

   c. The designated Safety Manager for the Division, Operating Group or site/project (or designee) will notify federal and state authorities as appropriate within the required timeframe (usually 8 hours).

   d. In the event of a fatality, URS may provide compassion payments to the family. The compassion payments have no

bearing on insurance coverage. The payments will help cover items such as travel, lodging, and meals for the family. The amount and method of payment(s) shall be approved by Operations Management or Vice President of Human Resources.

e. The Vice President of Safety in the Division in which the serious incident occurred will direct the investigation. Subject matter experts from other URS divisions may be asked to assist in the investigation.

f. Prepare documentation related to the incident at the direction of URS Legal Counsel. Documentation must contain “Privileged and Confidential” and “This document was prepared at the direction of counsel for use in anticipated litigation.”

g. Route copies of incident reports, medical reports, certificate of death, and other correspondences to the Vice President of Safety (or designee) and URS Legal to maintain privilege.

C. Incident Investigation

1. Perform root cause investigations on the following types of incidents:

   a. A recordable injury or illness of a URS or subcontractor employee.

   b. A vehicle incident involving a URS employee (while working) where either the employee or a member of the public is hospitalized.

   c. Incidents that result in significant adverse public media interest in URS or a URS project.

   d. Any near miss or incident occurring on projects undertaken for specific clients, where URS has contractually agreed to participate in safety systems that dictate that all near misses and incidents undergo a root-cause analysis.

   e. Damage to Company- or Government-owned equipment that exceeds $25,000, unless otherwise required by a client.

   f. A release to the environment of a substance in excess of a mandated reportable quantity, and requiring the response of external response organizations.

g. Any near miss that a Safety Manager determines—if taken to its logical conclusion—would have resulted in a fatality, multi-day lost-workday case, and/or inpatient hospitalization.

h. Any incident that the Vice President of Safety or Safety Director deems appropriate for an investigation.

2. Actions: The following actions will be taken to investigate an incident:

   a. The Project or Office Manager or Supervisor will notify the responsible Safety Manager that a recordable incident has occurred.

   b. The investigation may require that an investigation team be assembled. The team will be selected by the responsible Safety Manager, in collaboration with URS line managers.

   c. The responsible Safety Manager may include other appropriate members of management in an investigation team, and may solicit input from URS Legal regarding the investigation. The person leading the investigation will be trained in investigation techniques and root-cause analysis.

   d. If deemed appropriate by the Vice President of Safety, the responsible Safety Manager will complete the investigation under the direction of URS Legal Counsel and the Vice President of Safety (or designee).

   e. Following an incident, immediately determine the sources of evidence. Evidence may include a listing of people, equipment, and materials involved; a recording of environmental factors such as weather, illumination, temperature, noise, ventilation; and physical factors such as fatigue and medical conditions.

   f. The investigation process will include interviews with those involved or those directly witnessing the event.

   g. The investigation team lead should ensure that investigation tools are available (e.g., cameras, protective equipment, tape measures, marking devices, etc.).

   h. Store evidence (e.g., witness statements, photographs, documentation, etc.) that is collected during the investigation in a secured and locked location.

   i. If photos are taken, a photo log should be created as the photos are taken during the investigation. The Photo

Evidence Sheet (Attachment 049-2 NA) may be used to document photo details (e.g., date, time, direction).

j. The Visitors Log (Attachment 049-3 NA) may be used to document visitors present during the investigation.

k. Prepare an Incident Investigation Summary (Attachment 049-4 NA) for any investigation within 7 working days of the incident. For Energy & Construction and Federal Services, the Incident Investigation Summary should be uploaded into G-SMART. For Infrastructure & Environment, the information should be submitted to incidentreport@urs.com.

l. Investigation reports will identify the critical factors involved in the incident. Develop direct and contributing causes to identify the root cause(s) of an incident. Investigators will evaluate causes associated with human activities, physical causes, and systems causes. The report will identify corrective actions, and assign a responsible party and due dates.

m. Incident Investigation Report Template (Attachment 049-5) may be used as a template to prepare a detailed incident investigation report.

n. The responsible Safety Manager (or designee) should complete a Lessons Learned (Attachment 049-6 NA) within 7 working days of the incident. This Lessons Learned shall be forwarded to the Group Safety Director or Vice President of Safety and after review and approval be distributed to operations. This will then be used for communication to URS staff in order to facilitate the communication of lessons learned. The Lessons Learned will contain only basic facts; will be without reference to a site, location, or employee; and will be developed solely for the purpose of conveying lessons learned to prevent a similar incident, illness, or injury. Lessons Learned information should be posted on the Sourse for other employees to access.

3. Release of the investigation report outside of URS may only be authorized by the Division Vice President of Safety (or designee).

4. Following the completion of the incident investigation and development of corrective actions, it is critical that the requirements for preventing a recurrence of the event be implemented prior to re-starting the activity.

5. Documentation Summary

File incident information and associated incident investigation documentation in the appropriate safety files (e.g., GSMART).

6. Resources

A. Occupational Health Managers (OHMs)/Claims Managers

Infrastructure & Environment	Federal Services	Energy & Construction
Occupational Health Manager	Occupational Health Nurse Workers' Compensation Manager	Claims Manager
Jeanette Schrimsher, RN COHN-S (866) 326-7321 (Toll Free-U.S.) jeanette.schrimsher@urs.com	**BJ Heinrich, RN, COHN-S/CM, STS** (877) 878-9525 (Toll Free) bj.heinrich@urs.com	**Terry Sower, CPCU, AIC, CWCP** (208) 386-6038 (Office) terry.sower@urs.com

B. Why Tree – RCA Training Materials

C. SMS 048 – Hazardous Materials/Dangerous Goods Shipping

D. SMS 057 – Vehicle Safety Program

E. SMS 065 – Injury and Claims Management

F. Attachment 049-1 NA – Incident Report Form

G. Attachment 049-2 NA – Photo Evidence Sheet

H. Attachment 049-3 NA – Visitor Log

I. Attachment 049-4 NA – Incident Investigation Summary

J. Attachment 049-5 NA – Incident Investigation Report Template

K. Attachment 049-6 NA – Lessons Learned Template

L. Supplemental Information A – Definitions

URS	Health, Safety and Environment **INCIDENT REPORT FORM**	Attachment 049-1 NA Issue Date: May 2001 Revision 12: April 2013

GENERAL DETAILS

Project Name (If applicable):

Client (If applicable):

Incident Occurred While On: ☐ URS Premises ☐ Client Site ☐ Travel ☐ Other:

Address:

Event Type: ☐ Injury/Illness ☐ Fire ☐ Property Damage ☐ Spill/Release

Injury Type: ☐ Injury ☐ Illness ☐ First Aid ☐ Information Only (no treatment)

Office Employee Assigned To:

Date of Incident: Time of Incident:

Date Reported to Supervisor: Time Reported to Supervisor:

Specific On-Site Location of Incident (e.g., loading dock):

Brief Description of Incident **(what happened, severity of injury, and status of injured people including levels of medical treatment, work status)**:

Employee Description of Incident – Has the Employee completed Statement Form (page 2)?

☐ Yes ☐ No, state reason:

What was the employee doing just before the incident occurred? (Name tools, equipment, material and what the employee was doing with them):

How did the incident occur? (What and how details, name object(s), substance(s) involved):

What object(s) or substance(s) directly harmed the employee?

What was the injury or illness (Provide a brief description of the body part/nature of injury):

EMPLOYEE DETAILS

Employee Name: Employee ID/Number:

☐URS ☐ Contractor

Employee Phone #: Time Employee Started Work:

Supervisor Managing Work (PM if applicable): Supervisor Phone #:

Days Worked Weekly: ☐ Mon - Fri ☐ Other Than Mon - Fri Describe if Other: _____

STATEMENT FORM

Name of Injured Employee:		Name of Individual Providing Statement:	

This is a statement from: ☐ Injured Employee ☐ Supervisor ☐ Witness

Describe the incident in as much detail as possible (attach additional pages if needed).

Signature of Individual Providing Statement:			
Date:		Contact Phone Number:	

INCIDENT REPORT FORM

ACCIDENT TYPE	PRIMARY BODY PART		NATURE OF INJURY	
☐ Body reaction / systemic	☐ Abdomen	☐ Hip	☐ Amputation	☐ Frost bite
☐ Caught in, under, or between	☐ Ankle	☐ Knee	☐ Asphyxia	☐ Ganglion cyst
☐ Contact with (e.g., biological)	☐ Back, lower / upper	☐ Lip	☐ Blister	☐ Heat exhaustion /stroke
☐ Contact with chemicals	☐ Buttocks	☐ Lower leg	☐ Burn, chemical	☐ Hernia
☐ Contact with electrical	☐ Chest	☐ Mouth/teeth	☐ Burn, electrical	☐ Infection
☐ Contact with temperature extremes	☐ Chin	☐ Neck	☐ Burn, fire / thermal	☐ Inflammation
☐ Fall from elevation	☐ Circulatory system	☐ Nervous system	☐ Carpal tunnel syndrome	☐ Injection
☐ Fall on same level	☐ Digestive system	☐ Nose	☐ Conjunctivitis	☐ Pneumoconiosis
☐ Foreign body in eye	☐ Ear(s)	☐ Respiratory system	☐ Contusion / bruise	☐ Poisoning
☐ Inhalation	☐ Elbow	☐ Ribcage	☐ Cut / laceration	☐ Puncture
☐ Lifting, pushing, pulling	☐ Eye(s)	☐ Shoulder	☐ Dermatitis, allergic	☐ Repetitive stress
☐ Mobile equipment / component failure	☐ Face	☐ Spine	☐ Dermatitis, direct	☐ Respiratory
☐ Mobile equipment incident	☐ Finger/thumb	☐ Testicles	☐ Dislocation	☐ Splinter
☐ Motor vehicle incident	☐ Foot	☐ Toe	☐ Foreign body	☐ Sprain
☐ Overexertion	☐ Forearm	☐ Upper arm	☐ Fracture	☐ Strain
☐ Repetitive motion, cumulative trauma	☐ Hand	☐ Upper leg		
☐ Rubbed or abraded	☐ Head	☐ Wrist		
☐ Slip or overexertion resulting in strain, hernia, etc.	**PRIMARY BODY PART SIDE**			
☐ Struck against	☐ Left ☐ Right ☐ Both			
☐ Struck by				
☐ Surface contracted with irritating substances				

MEDICAL TREATMENT

What level of medical treatment was received? ☐ First Aid ☐ Clinic/Physician ☐ Emergency Room ☐ Refused/None

Was injured hospitalized overnight as an inpatient? ☐ Yes ☐ No

Was treatment provided on site? ☐ Yes ☐ No

Describe:

Hospital/Occupational Clinic Name: Physician Name:

CONTRIBUTING CAUSES

Contributing Causes:

ROOT CAUSE DETERMINATION

Root Cause(s):

CORRECTIVE ACTIONS

List methods of preventing/avoiding this type of incident in the future. There must be one or more corrective actions for each root cause.

Corrective Action	Responsible Party	Due Date

DISTRIBUTION

Energy & Construction
Incident data must be entered into G-SMART and a copy of the report sent to the respective Operating Group (OG) Safety Director per OG procedures.

Federal Services
Incident data must be entered into G-SMART within 24 hours of the incident.

Infrastructure & Environment
E-mail incident report to incidentreport@urs.com or fax to 512.419.6413.

URS	Health, Safety, and Environment **PHOTO EVIDENCE SHEET**	Attachment 049-2 NA Issue Date: May 2001 Revision 12: April 2013

Incident/Facility: _____

Instructions:

Pertinent information such as photo number, time and date photos were taken, direction camera was pointing (e.g., north, south, east, or west), and relationship to the incident must be recorded below each photo.

Date of Incident: _____

Photos Taken By: _____
(Last) (First) (M.I.)

Job Title: _____

Evidence Sheet Prepared By: _____
(Last) (First) (M.I.)

Job Title: _____

URS	Health, Safety, and Environment **PHOTO EVIDENCE SHEET**	Attachment 049-2 NA Issue Date: May 2001 Revision 12: April 2013

Investigation Name: _____

Attach Photo Here

Attach Photo Here

Print Number: _____

Time/Date Taken: _____

Direction: _____

Notes:

Print Number: _____

Time/Date Taken: _____

Direction: _____

Notes:

URS	Health, Safety, and Environment **VISITOR LOG**	Attachment 049-3 NA Issue Date: May 2001 Revision 12: April 2013

Incident/Facility: _____

Instructions:

It is important to note the name and purpose of each visitor during the incident investigation. Items such as persons interviewed, evidence taken, meetings, and request for information should be noted on this form. Duplicate this form if additional sheets are needed.

Name (Last, First, M.I.)	Affiliation	Date of Visit	Time of Arrival	Time of Departure	Notes

URS	Health, Safety, and Environment **INCIDENT INVESTIGATION SUMMARY**	Attachment 049-4 NA Issue Date: May 2001 Revision 12: April 2013

Event:	**Date of Incident:**
Work Location:	**Date of Review:**
Summary Prepared By:	
Summary of Incident:	
Root Cause(s):	

Contributing Factors	
Physical	
Systems	
Human or Behavioral	

Recommendations:

Corrective Actions

List methods of preventing/avoiding this type of incident in the future. There must be one or more corrective actions for each root cause.

Corrective Action	Responsible Party	Due Date

Investigation Title

Incident Location

Date Prepared

Investigation Participants:

{Name, Title}

{Name, Title}

{Name, Title}

{Name, Title}

Report Prepared by:

Name	Signature	Date

This report is for internal use only.

Company Proprietary

TABLE OF CONTENTS

Page

1.0 EXECUTIVE SUMMARY ..... #

2.0 DESCRIPTION OF EVENT ..... #

3.0 IMMEDIATE ACTIONS TAKEN ..... #

4.0 CONTRIBUTING CAUSES ..... #

5.0 ROOT CAUSES ..... #

6.0 RECOMMENDED CORRECTIVE ACTIONS ..... #

7.0 ATTACHMENTS ..... #

1.0 Executive Summary

Describe in two or three paragraphs what happened, root causes, and corrective actions.

2.0 Description of Event

Describe in detail what happened, sequence of events, and the extent of injuries or damage. Describe the findings related to Physical, System and Human/Behavior causes. Note times of events, the names of personnel involved, injured or as witnesses.

Reference picture(s) as (see **Figure 1**)

{Insert Image Here}

***Figure 1**, Brief Description*

3.0 Immediate Actions Taken

Describe the events immediately following the incident. Note responder first aid actions, emergency transport, hospital information, and resolution.

4.0 Contributing Causes

Describe completely each Physical, System and Human/Behavior cause.

5.0 Root Causes

Describe completely the root cause(s).

Company Proprietary

6.0 Recommended Corrective Actions

Describe the corrective action, responsible party and due date for completion. Use the following format.

CORRECTIVE ACTIONS		
Corrective Action	**Responsible Party**	**Due Date**

7.0 Attachments

Witness statements, figures, documents, pictures, etc.

Company Proprietary

Safety
Lessons Learned

URS

Attachment 049-6 NA
Issue Date: May 2001
Revision 12: April 2013

Title of Lesson Learned – Tahoma 20pt

Incident Summary

The Lessons Learned shall contain only basic facts; will be without reference to a site, location, or employee; and will be developed solely for the purpose of conveying lessons learned to prevent a similar incident, illness, or injury.

Use this column to describe the incident. Include photos within the column.

Heading text is Arial 12pt, bold, 3 pt after. Column text is Arial 10pt, paragraph 0pt before, 3pt after, line spacing 1.0, justified. Cell has default 0.19cm margins left and right. There is a central column to provide a gap between the left hand summary text and the right hand findings text.

You can fill this column with as much text as you wish, but the whole page, including the date at right below must still fit on one page.

The page is now laid out as a table, not as columns so the text in this column will now not flow into the adjacent column.

Insert photo if room is available. Do not include pictures that could identify the employee(s) involved.

Attempt to limit the document to one page when possible.

What Went Wrong?

- Use this section of this column to describe what went wrong.
- Text is Arial 10pt, paragraph 0pt before, 3pt after, line spacing 1.0, justified. Cell has default 0.19cm margins left and right.
- Keep the bulleting.

What Went Right?

- Use this section of this column to describe what went right.
- Text is Arial 10pt, paragraph 0pt before, 3pt after, line spacing 1.0, justified.
- Keep the bulleting.

Lessons Learned

- Use this section of this column to describe lessons learned.
- Text is Arial 10pt, paragraph 0pt before, 3pt after, line spacing 1.0, justified.
- Keep the bulleting.

If the text does not fill the column, you should insert additional line spaces before What Went Right and before Lessons Learned.

Do not allow the text to overwrite the date.

Insert Month Year

Contributing Cause: A cause that contributed to an occurrence but, by itself, would not have caused the occurrence.

Days-Away Case (DAC): Injuries that result in time lost from the job in excess of the day of the injury.

Fatality: Injuries or illnesses that result in death.

First Aid: Cases that require minor treatment administered on the job site. First Aid cases include treatments and subsequent observation of minor scratches, cuts, burns, splinters, and so forth, which do not ordinarily require medical care even though a physician, or registered professional personnel, may provide the care. Repeated use of non-prescription medication at non-prescription dosage, other than antiseptic, is a first aid case.

Incident Rate: The injury frequency expressed in terms of the number of incidence per 100 employees worked in a given year (200,000 hours). The incident rate is calculated for lost time, medical, total Occupational Safety and Health Administration (OSHA) recordable injuries, and total lost workdays.

Medical Injury: Injuries, which require treatment beyond first aid and are not, lost time or restricted duty injuries. Medical injuries include (but are not limited to) stitches, fractures, loss of consciousness, surgery, prescription medicines, etc. Medical injures are OSHA recordable.

Mine Accident, Injury and Illness Reporting: Reporting for projects covered by MSHA and 30 CFR shall follow reporting procedures specified in 30 CFR 50.20 using Form 7000-1. This form has four sections and definitions for data required are included in Part 50 of the regulation.

OSHA Recordable: Those injuries and illnesses that are required to be recorded on the OSHA 300 Log. These injuries include lost time injuries, restricted duty injuries, medical injuries, and all occupational illnesses as defined by 29 CFR 1904 Subpart C and entered on the OSHA 300 Log plus all work related non-first aid occupational illnesses or work related illnesses as listed in 29 CFR 1904, Appendix B regardless of treatment.

Recordable Injury/Illness: Those injury or illnesses that are work-related and results in one or more of the following:

1. Death.
2. Days away from work.
3. Restricted work or transfer to another job.

4. Medical treatment beyond first aid.
5. Loss of consciousness.
6. A significant injury or illness diagnosed by a physician or other licensed health care professional.

Restricted Work Injury: Injuries that result in the individual being assigned to transitional duty and/or temporary job assignment.

Root Cause: The cause that, if corrected, would prevent recurrence of this and similar occurrences. The root cause does not apply to this occurrence only, but has generic implications to a broad group of possible occurrences, and it is the most fundamental aspect of the cause that can logically be identified and corrected.

Critical Injury (Canada):

Per the Ontario Occupational Health and Safety Act, R.R.O. 1990, Regulation 834, a Critical Injury is defined as an injury of a serious nature that:

a. Places life in jeopardy;
b. Produces unconsciousness;
c. Results in substantial loss of blood;
d. Involves the fracture of a leg or arm but not a finger or toe;
e. Involves the amputation of a leg, arm, hand or foot, but not a finger or toe;
f. Consists of burns to a major portion of the body; or
g. Causes the loss of sight in an eye.

Per the British Columbia Workers Compensation Act, RSBC 1996, Chapter 492, a Critical Injury is defined as injury of a serious nature that includes the following:

a. Any incident that kills, causes risk of death, or seriously injures a worker;
b. Any blasting accident that results in injury, or unusual event involving explosives;
c. A diving incident that causes death, injury, or decompression sickness requiring treatment;
d. A major leak or release of a dangerous substance;
e. A major structural failure or collapse of a structure, equipment, construction support system or excavation; and any serious mishap.

URS SAFETY MANAGEMENT STANDARD

Bloodborne Pathogens

1. Applicability

This standard applies to the operations of URS Corporation and its subsidiary companies.

2. Purpose and Scope

The purpose of this standard is to (1) identify jobs and tasks where occupational exposure to bloodborne pathogens exists and (2) eliminate or significantly reduce the risk of infectious bloodborne diseases.

3. Procedures

The associated implementing regional procedures for this standard are included as attachments:

SMS 051 NA – North America

SMS 051 INT – International Operations (including Europe, Asia, South America and Africa)

SMS AP7-051 – Australia / New Zealand

URS SAFETY MANAGEMENT STANDARD

Bloodborne Pathogens

1. Applicability

This standard applies to all operations of URS Corporation and its subsidiary companies, and to all employees who may incur exposure to blood or other potentially infectious body fluids as a result of performing their assigned job duties. Examples include: designated first aid and emergency responders, work assignment at a medical laboratory site, or janitorial work involving removal of red bag waste or sharps from medical facilities or clinics.

Sewage work does not typically involve exposure to bloodborne pathogens as covered under the Occupational Safety and Health Administration (OSHA) standard, even though other biological hazards may be present, and should be addressed in the task/job hazard analysis.

Employees serving on safety committees or who volunteer as first-aid–trained employees do not fall under the OSHA requirements for vaccination, but should have training on bloodborne pathogens as part of the curriculum of their first aid training.

2. Purpose and Scope

The purpose of this standard is to identify jobs and tasks where occupational exposure to bloodborne pathogens (e.g., Human Immunodeficiency Virus, that will eliminate or significantly reduce the risk of infectious bloodborne diseases in accordance with the OSHA Bloodborne Pathogen Standard (29 Code of Federal Regulations [CFR] 1910.1030). This standard also includes provisions for affected employees to receive personal protective equipment; Hepatitis B vaccinations; training; and if necessary, confidential medical evaluations and follow up.

3. Implementation

Implementation of this standard is the responsibility of the URS manager directing activities of the facility, site, or project location.

- Program Administration – The Occupational Health Manager (OHM) and Vice President of Health, Safety, and Environment (or equivalent) is responsible for implementation and annual evaluation of the Exposure Control Plan (ECP) – Attachment 051-1 NA. The OHM will ensure that all medical actions required are performed, and that the appropriate employee health and OSHA records are maintained. The Vice President of Health, Safety, and Environment (or equivalent) will oversee provisions of necessary personal protective equipment and supplies, training, documentation of training, and will make the written ECP available to employees and OSHA representatives.

4. Requirements

A. Risk Identification

1. The facility or site manager, with assistance from the site safety representative, will perform an exposure determination concerning which employee may or may not have exposure to bloodborne pathogens. Employees will be classified into two categories:

    a. Employees formally designated as part of their job to perform tasks that may involve direct contact with blood or potentially infectious body fluids.

        i. Requires initial and annual training

        ii. Hepatitis B vaccination series will be offered

        iii. Requires procedures be followed in ECP.

    b. Employees not assigned to jobs or tasks that involve exposure to blood or potentially infectious body fluids, but who could in extraordinary situations, voluntarily assist injured or ill individuals, and therefore could have exposure to bloodborne pathogens.

        i. Requires post-exposure procedures outlined in ECP.

2. The ECP will be reviewed and updated at least annually, and whenever necessary to include new or modified tasks and procedures. The ECP will be reviewed by non-managerial employees responsible for direct patient care who are potentially exposed to injuries from contaminated sharps. These employees will be trained in the identification, evaluation, and selection of effective engineering and work practice controls.

B. Exposure Control Methods

1. All employees will use universal precautions—an approach to infection control where all human blood and body fluids are treated as potentially infectious.

2. Use engineering and work practice controls (e.g., sharps disposal containers, perform procedures to prevent splashing) to eliminate or minimize exposure to employees.

3. Provide personal protective equipment (e.g. disposable gloves, face masks with eye protection, liquid impermeable gowns, CPR

pocket masks) and ensure use in order to place a barrier between the employee and the blood or body fluids.

4. Wash hands immediately with soap and water after removing gloves or performing any work with blood or body fluids.

5. Perform housekeeping and decontamination of work surfaces with U.S. Environmental Protection Agency (U.S. EPA)-registered germicides, or a bleach solution diluted 1:10 with water, as needed, to maintain a safe working environment.

6. Dispose of regulated biohazardous waste (contaminated sharps or items that are capable of releasing blood or body fluids through employee handling) in special waste receptacles lined with red bags, and incinerate per federal and state regulations. This does not include small amounts of waste from a minor wound, which can be sealed in a plastic bag and disposed of in a solid waste receptacle.

C. Provide the Hepatitis B Vaccination series to all employees who have been designated to perform tasks that involve direct exposure to bloodborne pathogens. Further, make this vaccination series immediately available to employees who have had an occupational bloodborne exposure incident, whether as a result of their assigned tasks, or occurring as a result of incidental contact.

   An employee who declines the vaccination must sign the wavier form located at the end of Attachment 051-1 NA.

D. In the event that an employee is exposed to blood or body fluids, they should immediately flush the affected area with copious amounts of water. Arrange a confidential medical evaluation and follow-up with an occupational physician for the employee as soon as possible following the report of an exposure incident; preferably within 1 to 2 hours after the exposure incident has occurred.

E. Hazard Communication

   1. Use orange-red biohazard warning labels to identify lab areas or disposal containers with blood or other potentially infectious materials present.

   2. Conduct initial and annual training classes for all employees assigned to tasks where occupational exposure may occur.

F. Exposure Incident Investigation

The OHM and HSE Manager will review the circumstances of each exposure incident to determine if the appropriate work procedures were being followed at the time of the incident, and to assess and implement any necessary corrective actions, including changes required in the ECP.

5. Documentation Summary

A. Post-exposure medical records from consulting physician and exposure incident reports will be retained in employee's confidential medical record

B. Initial and annual training records

C. Regulated infectious medical waste manifest records will be stored by the site safety representative

6. Resources

A. U.S. OSHA 29 CFR 1910.1030 Occupational Exposure to Bloodborne Pathogens Standard, current revision.

B. Centers for Disease Control Morbidity and Mortality Weekly Report: "Public Health Service Guidelines for the Management of Health-Care Worker Exposure to HIV and Recommendations for Post-exposure Prophylaxis"

C. Centers for Disease Control Morbidity and Mortality Weekly Report: "Immunization of Health-Care Workers: Recommendations" December 26, 1997; Vol. 46, No. RR-18.

D. Centers for Disease Control Morbidity and Mortality Weekly Report: "Recommendations for Prevention and Control of Hepatitis C Virus (HCV) Infection and HCV-Related Chronic Disease" October 16, 1998; Vol. 47, No. RR-19.

E. Bloodborne pathogens standard and the construction industry (OSHA letter of interpretation 01-26-93)

F. Clarification on first aid requirements for hazardous waste sites (OSHA letter of interpretation 04-20-93)

G. SMS 024 – Medical Screening and Surveillance

H. Attachment 051-1 NA – Bloodborne Pathogens Exposure Control Plan

1. Introduction

Employees are at risk for exposure to and possible transmission of infectious diseases each time they are in contact with blood or body fluids. Bloodborne pathogens are microorganisms present in human blood and other body fluids that can cause serious disease in humans and include, but are not limited to Hepatitis B Virus (HBV), Hepatitis C Virus (HCV), and Human Immunodeficiency Virus (HIV). Therefore, this exposure control plan (ECP) has been established to ensure that employees are effectively informed concerning potential workplace health hazards, and that protective measures necessary to eliminate or minimize bloodborne exposure incidents are used whenever possible.

2. Exposure Determination

The Medical Surveillance Evaluation form (Attachment 024-2) will be used to evaluate which employees may incur occupational exposure to blood or other potentially infectious materials when performing routine tasks and procedures. These exposure determinations will be made without regard to the use of personal protective equipment, and regardless of exposure frequency.

The employees in the following job classifications may have occupational exposure to bloodborne pathogens, and are covered by this program:

- Occupational health nurse
- Paramedics
- Registered nurses
- Designated first aid providers
- Medical laboratory employees
- Janitorial workers in medical facilities and clinics.

Tasks and procedures that may expose employees to bloodborne pathogens include:

- Treating cuts, abrasions, and burns
- Cleaning contaminated environmental surfaces
- Administering cardiopulmonary resuscitation (CPR).

3. Exposure Control

A. “Universal precautions” are a required method of control to prevent exposure to blood and body fluids. This term refers to the concept that all human blood and certain human body fluids are treated as if known to be infectious for HIV, HBV, HCV, and other bloodborne pathogens, regardless of the perceived risk status of another individual. Universal

precautions apply to blood, other body fluids containing visible blood, semen, and vaginal fluids. Universal precautions do not apply to feces, nasal secretions, saliva, sweat, tears, sputum, urine, and vomitus unless they contain visible blood. Although these fluids have an extremely low or nonexistent risk for bloodborne pathogens, they are a potential source for other infectious diseases, and precautions must also be followed when these body fluids are present.

B. Engineering and Work Practice Controls

The following engineering controls will be in place in all areas of occupational exposure:

1. Accessible handwashing facilities. If soap and running water are not available, an antiseptic hand cleaner in conjunction with clean paper towels or antiseptic towelettes are acceptable temporary alternatives to running water. When this alternative method is used, employees must wash their hands with soap and running water as soon as feasible.
2. Containers for disposable contaminated sharps must be puncture-resistant, labeled a biohazard, leakproof, and have a closable top.
3. Containers for storage, transport, or shipment of blood or other potentially infectious materials, regulated waste, and contaminated laundry will be labeled with the biohazard symbol and site address, and have a securely closing lid.

Engineering controls will be reviewed and maintained on a regular basis to ensure effectiveness.

The following work practice controls must be strictly followed to minimize exposure, and isolate or remove bloodborne pathogens from the workplace:

1. Personal protective equipment will be provided at no cost to the employee, and will be chosen based on the anticipated exposure to blood. PPE is considered appropriate if it does not permit blood or other potentially infectious materials to reach or pass through clothes, skin, or mucous membranes of the eyes or mouth under normal conditions of use, and for the duration of time the equipment will be used. PPE must be readily accessible and will be removed prior to leaving the work area.
    a. Disposable single-use gloves must be used as a protective barrier in all situations in which contact with body fluids is anticipated. Gloves of the correct size will be provided. Disposable gloves will not be washed or disinfected for reuse, and will be replaced between employees, and if they become torn or punctured. Gloves are especially important

if the employee has cuts, abraded skin, chapped hands, or dermatitis.

b. Liquid-impermeable gowns, boots, and masks, in combination with eye-protective devices such as goggles and shatterproof glasses with solid-side shields or chin-length face shields, must be worn whenever splashing, spraying, or spattering of blood droplets or body fluids can be reasonably anticipated.

c. Disposable pocket mask ventilation devices must be provided in all first aid kits and used to avoid mouth-to-mouth contact during emergency cardiopulmonary resuscitation.

Examples of Recommended PPE (depending on task, more PPE may be needed).

Task	Gloves	Gown	Mask	Goggles	Boots
Bleeding control w/ minimal bleeding	Yes	No	No	No	No
Bleeding control w /spurting blood	Yes	Yes	Yes	Yes	No
Cardiopulmonary resuscitation	No	No	Yes	No	No
Decontamination/clean-up	Yes	No	No	No	No
Medical laboratory activities	Yes	Yes	Yes	Yes	No

2. Eating, drinking, smoking, applying cosmetics, and handling of contact lenses is prohibited in work areas where there is a reasonable likelihood of occupational exposure. Food and drink cannot be kept in refrigerators, freezers, shelves, cabinets, or on counter tops where blood or body fluids are present.

3. Contaminated needles and other sharps must not be bent or recapped unless a one-handed technique is used. They must be disposed of in an appropriate sharps container.

4. All regulated biohazardous waste will be placed in a waste receptacle that has designated red biohazard bags and a closable top controlled by a foot peddle. When full, the bags shall be removed with gloved hands, tied off, and placed in a biohazard shipping carton, to be held for pick-up. If any biohazard bag appears to be leaking, it must be double-bagged. The waste will be incinerated per federal and state regulations.

C. Housekeeping

1. Universal precautions must be used when cleaning or decontaminating any surface or equipment that may be

contaminated. Appropriate PPE must be used for protection during decontamination.

2. All contaminated environmental work surfaces such as countertops or floors will be cleaned with a household bleach solution diluted 1:10 with water directly following contamination with blood or body fluids.
3. Instruments such as tweezers, bandage scissors, and thermometers must be disposable rather than reusable equipment, and must be disposed of in an appropriate manner.
4. Broken, contaminated glassware must not be picked up directly with the hands. It must be cleaned up using a mechanical means such as a brush and dustpan or tongs.

4. Hepatitis B Vaccination

Within 10 working days of placement, all employees assigned to tasks with potential occupational exposure to bloodborne pathogens must be offered the Hepatitis B vaccination at no cost to the employee, unless the employee has had a previous Hepatitis B vaccination series, antibody testing reveals the employee is immune, or the vaccine is contraindicated for medical reasons. Further, this vaccination series must be made immediately available to employees who have an occupational exposure, whether as a result of their assigned tasks, or occurring from an incidental contact.

The local occupational medical facility used for routine medical surveillance will administer the vaccinations.

Employees who decline the Hepatitis B vaccine must sign a copy of the waiver form located at the end of this attachment. The signed waiver will be stored in the employee's medical record with the Occupational Health Manager. Employees may initially decline the vaccination, but may decide to take them at a later date, while still covered under this plan. The vaccinations will be made available to the employee at that time.

Employees choosing to take the vaccination series will sign a consent form at the occupational clinic prior to receiving the injections, and are advised to read the package insert regarding the efficacy, safety, method of administration, and benefits of the vaccine. Employees may also ask questions directly of the Medical Service Provider or local occupational physician. Employees are not required to participate in a prescreening program (to determine immunity) before receiving the vaccinations. If a routine booster of Hepatitis B vaccine is recommended by the U.S. Public Health Service at a future date, such booster dose(s) will be made available to affected employees.

5. Post-Exposure Incident Evaluation And Follow-Up

All occupational bloodborne pathogen exposures must be reported to the HSE representative and Occupational Health Manager immediately after initial decontamination first aid is accomplished. Following the report of an exposure incident, a confidential medical evaluation with an occupational physician will be arranged as soon as possible, ideally no later than 1 to 2 hours after the incident has occurred. In some states, depending on applicable workers' compensation law, employees may choose treatment from their personal physician. A copy of the OSHA Bloodborne Pathogen Standard will be provided if the physician does not have a copy. A written incident report must be completed as soon as possible, fully describing the incident.

A. First aid protocol for treatment immediately after an exposure incident:

1. Lacerations, punctures, and abrasions should be washed under cool running water for at least 5 minutes, allowing free bleeding. Cleanse area well with soap or iodine solution. Apply sterile dressing as needed. Give tetanus booster if indicated (7 to10 years since last booster).
2. Ocular exposure requires irrigation of the eye with water or sterile normal saline solution for 15 minutes.
3. Mucous membrane exposure requires rinsing mouth with ½ strength 3 percent hydrogen peroxide for 30 seconds, four separate and consecutive times.

B. Confidential Medical Evaluation

1. The treating occupational physician will receive documentation of the routes of exposure, the circumstances surrounding the incident, and identification of the source individual (the individual the employee was exposed to). The blood of the source individual will be tested if possible, and after consent is obtained. When legally permissible, results of the source individual's tests will be made available to the exposed employee, with the exposed employee informed about the applicable laws and regulations concerning the disclosure of the identity and infectivity of the source individual.
2. Testing of the exposed employee's blood, if consented to (the employee may consent to baseline blood collection, but may request that the sample not be tested for HIV for up to 90 days, if at all), is recommended.
3. Post-exposure medical treatment will be offered in accordance with the current recommendations of the U.S. Public Health Services. This may include, but is not limited to:
    a. A series of HIV post-exposure blood tests

b. Hepatitis B vaccination and/or Hepatitis B immune globulin

c. HIV post-exposure prophylactic medications

d. Evaluation of acute febrile illnesses following exposure

e. Employee counseling concerning precautions to take during the period after the exposure incident, and information on signs and symptoms of potential illnesses.

C. Healthcare Professional's Written Opinion

The Occupational Health Manager must obtain and provide the employee with a copy of the evaluating physician's written opinion within 15 days of the completion of the medical evaluation. A copy will be maintained in the employee's confidential medical record. The written opinion must be in accordance with the requirements of the OSHA Bloodborne Pathogens Standard indicating that the employee has been informed of any medical conditions resulting from exposure that require further evaluation or treatment. All other findings or diagnoses must remain confidential and will not be included in the report.

6. Hazard Communication

A. Fluorescent red or orange-red warning labels bearing the universal biohazard symbol and the legend BIOHAZARD must be firmly affixed to all containers (e.g., waste cans, sharps containers, and refrigerators) used for the storage or shipment of blood or other potentially infectious materials.

B. All employees designated to perform tasks involving occupational exposure must receive bloodborne pathogens training at the time of initial assignment to the job. This training will be given during working hours and at no cost to employees. Refresher courses will be provided annually (within 1 year of previous training), and if new tasks or procedures are implemented. Material appropriate in content and vocabulary to education level, literacy, and language of the employees must be used for all required training.

Training will include: making accessible a copy of the regulatory text of the standard and explanation of its contents, general discussion on bloodborne diseases and their transmission, exposure control plan, engineering and work practice controls, personal protective equipment, Hepatitis B vaccine, response to emergencies involving blood, how to handle exposure incidents, the post-exposure evaluation and follow-up program, signs/labels/color-coding, and question and answer time with the trainer.

7. Exposure Incident Investigation

The site Health and Safety Representative will review the circumstances of any exposure incident to determine corrective actions. The incident report will include:

A. Engineering controls in use at the time

B. Work practices followed

C. A description of any equipment being used

D. A description of the work being performed

E. PPE that was used at the time of the incident

F. Date, time, and location of the incident

G. Employee's training.

Within 24 hours, a copy of this incident report will be forwarded to the Occupational Health Manager, who will evaluate what follow-up actions should be addressed, including if revisions need to be made to the Exposure Control Plan.

8. Recordkeeping

A. The Occupational Health Manager will be responsible for establishing and maintaining accurate, confidential workers' compensation medical records for each employee with occupational exposure for the duration of employment plus 30 years, in accordance with OSHA 29 CFR 1910.1020 – Access to Employee Exposure and Medical Records.

B. The HSE representative will be responsible for maintaining the bloodborne pathogens training class records for at least 3 years from the date of training. The records will include the date of the training class, a summary of the class contents, the names of the qualified instructors, and the names and job titles of personnel attending the training.

C. Employee medical records must be made available to employees (or their designated representative) with written consent by the employee within 15 working days of request.

D. An exposure incident will be evaluated by the Occupational Health Manager and Vice President of Health, Safety, and Environment to determine if the case meets OSHA's Recordkeeping Requirements (29 CFR 1904).

HEPATITIS B VACCINATION DECLINATION FORM

I understand that due to my occupational exposure to blood or other potentially infectious materials, I may be at risk of acquiring Hepatitis B virus (HBV) infection.

I have been given the opportunity to be vaccinated with Hepatitis B vaccine, at no charge to myself; however, I decline Hepatitis B vaccination at this time. I understand that by declining this vaccine, I continue to be at risk of acquiring Hepatitis B, a serious disease.

If, in the future, I continue to have occupational exposure to blood or other potentially infectious materials and I want to be vaccinated with the Hepatitis B vaccine, I can receive the vaccine series at no cost to me.

Name _____

Date _____

Witness _____

Date _____

URS SAFETY MANAGEMENT STANDARD

Radiation Protection Program

1. Applicability

This standard applies to the operations of URS Corporation and its subsidiary companies.

2. Purpose and Scope

This standard is intended to ensure that:

A. Activities conducted at those project sites where the potential for exposure to ionizing radiation exists are conducted in a manner consistent with sound radiological practices.

B. Radiological exposure to site personnel and the environment are maintained As Low as Reasonably Achievable (ALARA).

3. Procedures

The associated implementing regional procedures for this standard are included as attachments:

SMS 052 NA – North America; Australia / New Zealand

SMS 052 INT – International Operations (including Europe, Asia, South America and Africa)

URS SAFETY MANAGEMENT STANDARD

Radiation Protection Program

1. Applicability

This standard applies to URS field projects with known radioactive contamination that may result in the exposure of employees to ionizing radiation. This does not include sites where portable gauges may be in use. Refer to SMS 044 – Radiation Safety for Portable Gauges for additional information. Note: Use of a client's radiation safety program (e.g., Department of Energy, Department of Defense) may preclude the use of this SMS.

2. Purpose and Scope

The purpose of this standard is to ensure the following:

A. Activities conducted at those project sites where the potential for exposure to ionizing radiation exists are conducted in a manner consistent with sound radiological practices.

B. Radiological exposure to site personnel and the environment is maintained As Low as Reasonably Achievable (ALARA).

3. Implementation

Implementation of this standard is the responsibility of the URS manager directing activities of the facility, site, or project.

4. Requirements

A. Appoint a Site Radiation Safety Officer (SRSO), who will have the following responsibilities:

1. Coordinate implementation of the Radiation Protection Program (Attachment 052-1 NA) and any site-specific addenda or programs.

2. Evaluate potential site/employee radiation exposure.

3. Recommend workplace and administrative controls.

4. Ensure that all employees are knowledgeable of applicable radiological safety requirements for their work area and comply with these requirements.

B. Implement steps to maintain radiation exposures ALARA. At a minimum, the following steps will be implemented on all sites:

1. Estimate radiation exposure and use the estimates to set project ALARA dose goals.

2. Review actual radiation exposures and compare with projected dose values. If necessary, make adjustments to the administrative and engineering controls that are in place.

C. Form an ALARA Committee for each site at which there is a potential for exposure to ionizing radiation at levels that significantly exceed natural background. At a minimum, this Committee will be made up of the SRSO, the Project or Site Manager, the Health Physics Supervisor (if applicable), and one representative of the site labor force. The Committee will meet periodically to review previous site radiation exposure, air monitoring, effluent monitoring, and contamination level data to assess the presence of unacceptable trends. The Committee will also assess the success of the radiological controls, serve as a forum for recommendations for improvements, and maintain a written record of the Committee's activities in the project files.

D. Establish site-specific administrative goals for radiological protection. The annual administrative goals will not exceed those specified in Section 5.0 of the Radiation Protection Program (Attachment 052-1 NA).

E. Complete a Radiation Work Permit (RWP) (Attachment 052-2 NA) to inform workers of area radiological conditions and entry requirements. Use the RWP at all sites that have a potential for exposure to radiation or radioactive materials. Where appropriate, combine radiological requirements with other nonradiological requirements onto a single Hazardous Work Permit (Attachment 052-3 NA).

F. Control Zones/Procedures

1. Permit only trained, authorized, and qualified personnel to access radiological control areas. Establish control measures and procedures using an RWP system to ensure appropriate planning, control, hazard communication, and documentation of work activities in controlled areas.

2. Post a standard radiation symbol in magenta or black on a yellow background at each access point to a controlled or restricted area along with appropriate identification and instructions.

G. Monitoring

1. Enroll the following personnel in an appropriate bioassay program:

   a. Radiation workers who have the potential to receive intakes of radioactive materials that may result in a committed effective dose equivalent of 500 mrem.

   b. All personnel who perform routine field activities where the potential for removable surface or airborne radioactive contamination exists.

2. Perform external dosimetry on the following personnel:

   a. Any individual likely to receive an annual external whole body exposure in excess of 10% of the occupational limit.

   b. Any individual who enters a High or Very High Radiation Area.

3. Acquire the work-related radiation exposure history of personnel from past employers where radiation monitoring was required.

H. Medical Surveillance

All personnel performing work where a potential for exposure to ionizing radiation exists will participate in URS' medical surveillance program. Personnel will be required to be medically qualified for work with ionizing radiation. All cases of overexposure and suspected ingestion or inhalation of radioactive materials must be reported to the SRSO immediately. URS' Medical Consultant will advise the SRSO on the type(s) of test(s) required to accurately assess the effects of exposure.

I. Workplace Monitoring

1. Conduct radiological monitoring and surveys of radiation exposure levels, contamination, and airborne radioactivity. Surveys will be performed only by trained and qualified personnel and will be conducted as specified in the site-specific health and safety plan (HASP) and associated RWPs.

2. Conduct air sampling as specified in the site-specific HASP.

J. Establish radiological contamination survey, documentation, and labeling requirements for release of all property/material from a controlled area. All equipment, materials, and property used in a controlled area will be considered contaminated and will not be released to an uncontrolled or unrestricted area until they have been surveyed and meet either the release limits provided in the Radiation Protection Program (Attachment 052-1 NA) or site-specific requirements.

K. Personal Protective Equipment

1. Select personal protective equipment (PPE) based on the contamination levels in the work area, the anticipated work activity, ALARA and safety considerations, and consideration of nonradiological hazardous materials that may be present. PPE provided will be in good condition and free of chemical or radioactive contamination. Refer to SMS 029 – Personal Protective Equipment for additional information.

2. Use respiratory protection, where necessary, in accordance with SMS 042 – Respiratory Protection.

3. Use the protection factors listed in Appendix A of 10 CFR 20 in the assessment of potential radioactive material intake.

L. Decontamination

1. Personnel

a. Decontaminate personnel, if necessary, using soap and water. Decontamination fluids will be collected and disposed of as radioactive waste.

b. If contamination has been transferred to the skin with chemical carriers or if repeated decontamination attempts with soap and water are unsuccessful, additional decontamination steps may be required. Prior to attempting any additional methods, medical assistance and direction will be sought.

2. Equipment

a. Perform decontamination using techniques that are appropriate based on site-specific conditions.

b. Collect and dispose of decontamination wastes as radioactive waste.

M. Waste Management

1. Identify and segregate materials suspected of being mixed waste (Resource Conservation and Recovery Act [RCRA], Toxic Substances Control Act [TSCA], etc. hazardous substances combined with radioactive materials) as soon as practical to avoid combining mixed waste with other waste forms.

2. Implement radioactive waste minimization techniques, as appropriate.

N. Develop site-specific radiological emergency procedures commensurate with the level of hazard. The procedures will address the following, at a minimum:

1. Severe weather.

2. Transportation accidents or spills.

3. Personnel contamination and medical emergencies.

4. Emergency response and notification requirements involving radioactive materials.

5. Responsibilities of emergency response agencies and site personnel.

O. Training

1. All personnel entering an area where radioactive material or radiation-generating devices are used will receive instruction in the following:

a. The presence of the material or device.

b. Health and safety problems associated with exposure to radiation, including the potential effects of radiation on a pregnant female, the fetus, or the embryo.

c. Precautions and controls used to control exposure.

d. This safety management standard and the Radiation Protection Program (Attachment 052-1 NA).

e. Their rights and responsibilities.

A minimum retraining frequency of two years will be implemented.

2. Training documentation, including the individual's name, date of training, topics covered, the results of an appropriate examination, and the name of the certifying official, will be generated. No employee will be permitted to independently perform tasks inside a radiological controlled area until the appropriate training and qualification requirements are met.

3. Additional training requirements will be determined on a site-specific basis and documented in the applicable HASP.

P. Records Management

1. At the completion of site activities, send copies of exposure monitoring records to URS' Health Services Administrator for inclusion into each respective employee's medical file.

2. Transfer exposure monitoring records for subcontract personnel to each respective subcontract organization.

3. Interim storage of radiological records will be the responsibility of the SRSO and will be maintained in a readily retrievable, controlled manner.

5. Documentation Summary

The following documentation will be maintained in the project file:

A. Doses received by individuals during previous and current employment.

B. Medical clearance documentation.

C. Written declarations of pregnancy and withdrawal of pregnancy.

D. Written records of ALARA committee activities, evaluations, and controls.

E. Results of surveys for radiation and radioactive material.

F. Results of calibrations performed on radiological instruments and quality control checks for radiological instrumentation and personal monitoring devices.

G. Records of completed radiological training.

H. Radiation Work Permits and/or Hazardous Work Permits.

I. Records of internal and/or regulatory agency inspections, reviews, and audits with corrective actions closeout.

6. Resources

A. U.S. Occupational Safety and Health Administration (OSHA) Standard – Ionizing Radiation – 29 CFR 1910.1096

B. U.S. OSHA Standard – Ionizing Radiation – 29 CFR 1926.53

C. Department of Transportation Standard – Transportation: Hazardous Materials Regulations – 49 CFR 171-177

D. Nuclear Regulatory Commission Standard – Standards for Protection Against Radiation – 10 CFR 20

E. SMS 029 – Personal Protective Equipment

F. SMS 042 – Respiratory Protection

G. SMS 044 – Radiation Safety for Portable Gauges

H. Attachment 052-1 NA – Radiation Protection Program

I. Attachment 052-2 NA – Radiation Work Permit

J. Attachment 052-3 NA – Hazardous Work Permit

K. Attachment 052-4 NA – Declaration of Pregnancy Form

L. Attachment 052-5 NA – Embryo/Fetus Initial Dose Calculation

M. Attachment 052-6 NA – Withdrawal of Declaration of Pregnancy

1.0 PURPOSE AND SCOPE

This Radiation Protection Program was prepared for use on URS field projects with known radioactive contamination that may result in the exposure of employees to ionizing radiation, particularly projects at Formerly Utilized Sites Remedial Action Program (FUSRAP) sites. This document was developed to ensure that

- Activities at these sites are conducted in a manner consistent with sound radiological practices,
- Radiological exposure to site personnel and the environment are maintained As Low as Reasonably Achievable (ALARA), and
- Activities at these sites are performed in a manner consistent with applicable federal, state, and local regulations.

This Radiation Protection Program was prepared pursuant to the requirements of U.S. Army Corps of Engineers (USACE) EM-385-1-1, Section 6E (*Radiation Safety Program*) and is consistent with the requirements for a Radiation Protection Program presented at 10 CFR 20.1101 (commensurate with the types of activities that URS will perform at FUSRAP sites). Note: None of these sites are licensed by the Nuclear Regulatory Commission (NRC), and as such, URS is not considered a licensee of the Nuclear Regulatory Commission (or any other Agreement State program) in regard to activities on these sites. Use or possession of licensable quantities of radioactive materials requires the issuance of a radioactive materials license from the NRC or an Agreement State.

An annual review of this Radiation Protection Program's content and implementation will be conducted by URS' Corporate Radiation Safety Officer, in accordance with 10 CFR 20.1101(c) and EM-385-1-1, Section 6E.

2.0 APPLICABILITY

The work practices specified in this Radiation Protection Program apply to work conducted by URS personnel involved in contracts that may result in the exposure of employees to ionizing radiation. Each URS employee working in a radiation area or a restricted area is responsible for following this Program. The URS Project Manager is responsible for ensuring that the Program is implemented at a particular site.

The majority of URS' contracts under the purview of this Program are expected to be at construction and environmental investigation/restoration projects involving materials containing low levels of radiation and radioactivity. Although this Program has been tailored for these types of activities, implementation of Program elements will be commensurate with the nature of each site-specific project. Implementation of this Program will be performed through the applicable site-specific health and safety plan (HASP) and associated standard operating procedures.

3.0 GENERAL

3.1 References

- Department of Transportation (DOT) – Transportation: Hazardous Materials Regulations – 49 CFR 171-177
- NRC – Standards for Protection Against Radiation – 10 CFR 20

- U.S. Occupational Safety and Health Administration (OSHA) – Ionizing Radiation – 29 CFR 1910.96
- U.S. OSHA – Ionizing Radiation – 29 CFR 1926.53
- USACE – Ionizing Radiation – EM-385-1-1, Section 6E

3.2 Definitions

Airborne Radioactivity Area - Area where the measured concentration of airborne radioactivity above natural background exceeds a peak concentration of 1 DAC or 12 DAC-hours during a work week.

As Low As Reasonably Achievable (ALARA) - An approach to radiological control or a process to manage and control exposures to the work force and to the general public at levels as low as is reasonable, taking into account social, technical, economic, practical, and public policy considerations.

Bioassay - Measurement of radioactive material deposited within or excreted from the body. This process includes whole body, urine and organ counting and others.

Contaminated Area - An area in which radioactive contamination is present that exceeds removable levels presented in Table 7.1.

Controlled Area - An area in which access is controlled in order to protect personnel from exposure to radiation and radioactive materials. An area in which the existing or potential radiation and radioactivity levels are above normal background but are less than that designating a Radiological Area or a restricted area.

Derived Air Concentration (DAC) - The concentration of a radionuclide in air that, if breathed over the period of a work year, would result in the annual limit on intake being reached.

Disintegration per Minute (dpm) - The rate of emission by radioactive material as determined by correcting the counts per minute observed by a detector for background, efficiency, and window size associated with the instrument.

Dose - A generic term for the amount of energy deposited in body tissue due to radiation exposure. Technical definitions for dose terms necessary for various exposure calculations and recordkeeping purposes include the following:

> <u>absorbed dose (D)</u>: Energy imparted to matter by ionizing radiation per unit mass of irradiated material at the place of interest in that material. The units of absorbed dose are the rad and the gray (Gy).
>
> <u>dose equivalent (HT)</u>: The product of the absorbed dose in tissue, quality factor, and all other necessary modifying factors at the location of interest. The units of dose equivalent are the rem and sievert (Sv).
>
> <u>effective dose equivalent (HE)</u>: The sum of the products of the dose equivalent to the organ or tissue (HT) and the weighting factors (WT) applicable to each of the body organs or tissues that are irradiated (HE = SWT x HT)
>
> <u>committed dose equivalent (HT,50)</u>: The dose equivalent to organs or tissues of reference (T) that will be received from an intake of radioactive material by a person during the 50-year period following the intake.

committed effective dose equivalent (HE,50): The sum of the products of the weighting factors applicable to each of the body organs or tissues that are irradiated and the committed dose equivalent to these organs or tissues (HE,50 = SWT x HT,50)

total effective dose equivalent (TEDE): The sum of the deep dose equivalent (for external exposures) and the committed effective dose equivalent (for internal exposures).

total organ dose equivalent (TODE): The sum of the deep dose equivalent (for external exposures) and the committed dose equivalent to an individual organ or tissue (for internal exposures).

Fixed Contamination - Radioactive material that cannot readily be removed from surfaces by nondestructive means such as causal contact, wiping, brushing, or washing.

Frisking - Process of monitoring personnel for contamination.

Hazardous Work Permit (HWP) - Permit that identifies radiological conditions and health and safety hazards, establishes worker protection and monitoring requirements, and contains specific approvals for radiological work activities. The HWP serves as an administrative process for planning and controlling radiological work and informing the worker of the radiological, health, and safety issues.

High Radiation Area - An area, accessible to personnel, in which radiation levels could result in a person receiving a dose equivalent to or in excess of 100 mrem in 1 hour at 30 cm from the radiation source or from any surface that the radiation penetrates.

Internal Dose - The portion of the dose equivalent to that received from radioactive material taken into the body.

Lifetime Dose - Total occupational exposure over a worker's lifetime, including external and committed internal dose.

Low Level Radioactive Waste - Waste that contains radioactivity and is not classified as high level waste, transuranic waste, spent nuclear fuel, or by-product material as defined in Section 11e(2) of the Atomic Energy Act.

Mixed Waste - Waste containing low level radioactive waste as well as Resource Conservation and Recovery Act (RCRA) or Toxic Substances Control Act (TSCA) waste.

Naturally Occurring Radioactive Material (NORM) - Includes radioactive elements found in the environment. Long-lived radioactive elements of interest include uranium, thorium and potassium, and any of their radioactive decay products, such as radium and radon. These elements have always been present in the earth's crust and within the tissues of all living beings.

Occupational Dose - The dose received by a person during employment in which the person's assigned duties involve exposure to radiation and to radioactive material. Occupational dose does not include dose received from background radiation, as a patient from medical practices, from voluntary participation in medical research programs, or as a member of the public.

Personnel Dosimetry - Devices designed to be worn by a single person for the assessment of dose equivalent such as film badges, thermoluminescent dosimeters (TLDs), and pocket ionization chambers.

Personnel Monitoring - Systematic and periodic estimate of radiation dose received by personnel during work hours.

Radiation - Ionizing radiation includes alpha particulate, beta particulate, X-rays, gamma rays, neutrons, and other particulates capable of producing ions.

Radiation Area - An area, accessible to individuals, in which radiation levels could result in an individual receiving a dose equivalent to or in excess of 0.005 rem in 1 hour at 30 cm from the source of radiation or from any surface that the radiation penetrates.

Radiation Work Permit (RWP) - Permit that identifies radiological conditions, establishes worker protection and monitoring requirements, and contains specific approvals for radiological work activities. The RWP serves as an administrative process for planning and controlling radiological work and informing the worker of the radiological, health, and safety issues.

Radioactive Material Area - A controlled area or structure where radioactive material is used, handled, or stored.

Radiological Worker - Worker whose job assignment requires work on, with, or in the proximity of radiation production machines or radioactive materials. A radiological worker has the potential to be exposed to more than 100 mrem per year, which is the sum of the dose equivalent to external irradiation and the committed effective dose equivalent to internal irradiation.

Removable Contamination - Radioactive material that can be removed from surfaces by nondestructive means, such as casual contact, wiping, brushing, or washing.

Survey - An evaluation of the radiological conditions and potential hazards incident to the production, use, transfer, release, disposal, or presence of radioactive material or other source of radiation. When appropriate, such an evaluation includes a physical survey of the location of radioactive material and measurements or calculations of levels of radiation, or concentrations or quantities of radioactive material present.

Technologically Enhanced Naturally Occurring Radioactive Material (TENORM) - Any naturally occurring radioactive materials not subject to regulation under the Atomic Energy Act whose radionuclide concentrations or potential for human exposure have been increased above levels encountered in the natural state by human activities.

Thermoluminescent Dosimeter (TLD) - Radiation detection and measuring device used to record the radiological exposure of personnel or area to certain types of radiation.

Unrestricted Area - An area designated by the NRC as being an area to which access is neither limited nor controlled by a NRC licensee.

3.3 Organization

3.3.1 Vice President/Director of Health, Safety, and Environment (HSE)

URS' Vice President/Director of Health, Safety, and Environment (HSE) is responsible for overall administration of the environmental health and safety program, including the Radiation Protection Program.

3.3.2 Business Radiation Safety Officer

URS' Business Radiation Safety Officer is responsible for:

- Continuing to develop and implement the Radiation Protection Program;

- Reviewing the qualifications of site radiation safety personnel (Site Radiation Safety Officer and Health Physics Technicians);
- Reviewing and approving the standard operating procedures that implement specific elements of the Radiation Protection Program;
- Conducting audits of site radiation safety programs; and
- Periodic reviewing of personnel radiation monitoring results.

3.3.3 Site Radiation Safety Officer

The Site Radiation Safety Officer (SRSO) will develop and coordinate implementation of the Radiation Protection Program. The SRSO will evaluate potential site/employee radiation exposure and recommend workplace and administrative controls, as necessary. The SRSO will be responsible for the development and administration of the Radiation Protection Program that will be incorporated in the HASP and associated standard operating procedures. The SRSO will be responsible for implementing and managing the site-specific Radiation Protection Program, as well as ensuring that all employees under the SRSO's control are knowledgeable of applicable radiological safety requirements for their work area and comply with these requirements.

The SRSO will be technically qualified and will meet the following experience, training, and education minimal requirements:

- Formal training in radiation protection that covers the following topics: physics of radiation, radiation interaction with matter, mathematics necessary for the subject matter, biological effects of radiation, and type and use of instruments for detection, monitoring, and surveying radiation;
- Hands-on training in the theory and uses of radiation monitoring equipment, and procedures; and
- Knowledge of regulations (NRC, Environmental Protection Agency, DOT, and Department of Defense) to include all applicable components pertaining to radioactive materials, radiation-generating devices, and radioactive and mixed waste.

Operations involving radiation hazards or use of radioactive material or radiation-generating devices will be performed under the direct supervision of a person, designated in writing by the SRSO, who is qualified and responsible for radiation safety. This person will conduct surveys and evaluate and secure any specialized assistance to assure compliance with radiation protection standards.

3.3.4 Health Physics Technicians

Health Physics Technicians will be responsible for assisting the SRSO in the implementation of radiological controls on each site. Specific responsibilities will include

- Performing radiological surveys;
- Collecting effluent samples (air and water); and
- In conjunction with the SRSO, assessing radiological hazards during work changes and making adjustments to ensure that worker radiological exposures and releases to the environment are maintained ALARA.

Qualifications of Health Physics Technician personnel will be reviewed by the SRSO to ensure that the level of expertise is commensurate with the assigned duties. Minimally,

Health Physics Technicians will meet the experience and training requirements contained in American National Standards Institute (ANSI) 18.1, 1969. Personnel who do not yet meet these minimal requirements may be allowed to perform limited radiological monitoring tasks, under the supervision of a qualified Health Physics Technician.

3.3.5 URS Project Manager

The URS Project Manager will be responsible for

- Reviewing each scope of work to identify potential radiation hazards;
- Designating a SRSO;
- Arranging for employees on the project to receive appropriate radiation safety training;
- Ensuring that employees working on the project are monitored for radiation exposures; and
- Arranging for employee monitoring results to be sent to the URS Occupational Health Specialist.

The URS Project Manager ensures that all employees under his or her control are knowledgeable of applicable radiological safety requirements for their work area and compliance with these requirements. Project Managers emphasize the need for high standards for radiological control through direct communication, support of radiation control goals, and a presence in the workplace.

3.3.6 Employees

Employees are responsible for knowing radiological protection requirements for their work areas and complying with these requirements.

4.0 ALARA PROGRAM

4.1 Policy Statement

It is URS' policy to conduct all work with ionizing radiation in accordance with established good practices in radiation protection, and in all cases, to incorporate radiological criteria to ensure safety and maintain radiation exposures ALARA. To this end, URS business management holds its Project Managers responsible for implementing all plans and procedures prepared in accordance with regulatory and contract documents. Project Managers will be responsible for demonstrating URS' commitment through direct communication, instruction, and inspections of the workplace. Project Managers will use facility and equipment design features as the primary method to maintain exposures ALARA. In most cases, decontamination operations represent an uncommon activity in facilities designed for specific purposes. Design features of temporary facilities and special equipment will be in general augmented by administrative and procedural requirements.

4.2 Administrative Implementation Procedures

Implementation of specific steps aimed at maintaining radiation exposures ALARA will be determined on a site-specific basis and will be commensurate with the nature of both the radiological work being performed and the radiation hazards present. Minimally, the following steps will be implemented on all sites:

- Radiation exposure estimates will be made and used to set project ALARA dose goals;

- Periodic review of actual radiation exposures against projected dose values will be conducted; if necessary, adjustments will be made to the administrative and engineering controls that are in place; and
- An ALARA Committee will be formed, consisting of the SRSO, Site Manager, Health Physics Supervisor (if applicable), and representatives of the workforce. This committee will meet periodically (at least every quarter); the frequency will be dependent on the nature of the radiological work being conducted and radiation levels present. Activities of the ALARA Committee are detailed in Section 4.3, ALARA Committee.

Commensurate with the nature of the work being performed and radiation levels present, the following additional measures will be considered (specific implementation of these additional program measures will be documented in the HASP):

- Inclusion of Radiation Control Hold Points in Work Documents;
- Work Processes and Special Tools to Reduce Exposures;
- Engineering Controls to Minimize the Spread of Activity;
- Special Radiological Training or Monitoring Requirements;
- Mockups for High Exposure or Complex Tasks;
- Engineering, Design, and Use of Temporary Shielding;
- Walkdown or Dry-run of the Activity Using Applicable Procedures;
- Staging and Preparation of Necessary Materials/Special Tools; and
- Maximization of Prefabrication and Shop Work.

4.3 ALARA Committee

An ALARA Committee will be formed for each site at which there is a potential for exposure to radiation at levels that significantly exceed natural background. This Committee will be minimally composed of the SRSO, Project Manager, Health Physics Supervisor (if applicable), and one representative of the site labor force.

The ALARA Committee will meet periodically (at a minimum of once each quarter) and will review previous site radiation exposure, air monitoring, effluent monitoring, and contamination level data to assess the presence of unacceptable trends. Additionally, this Committee will periodically assess the success of the radiological controls and serve as a forum for recommendations for improvements. A written record (minutes) of the Committee's activities will be maintained. The ALARA Committee will serve the function of the Ionizing Radiation Safety Committee (ISRC), referenced in EM-385-1-1, Section 6E.

5.0 EXPOSURE LIMITS

5.1 Administrative Goals

Administrative goals for radiological protection performance will be established for each site. These limits are more conservative than regulatory limits, commensurate with the work plan and level of hazard, and in accordance with the ALARA principle. Annual radiological goals (not to be exceeded) are as follows:

- Maximum individual total effective dose equivalent: 500 mrem

- Maximum embryo/fetus total organ dose equivalent for a declared pregnancy:100 mrem
- Maximum total effective dose equivalent to a member of the public, or visitor (excluding radon and thoron): 10 mrem.

5.2 Occupational Exposure Limits

The occupational exposure to employees performing the duties of radiation workers will be controlled so that the limits in Table 5.1 are not exceeded in one year. Furthermore, measures will be taken to maintain doses as far below these limits as reasonably achievable through the use of administrative goals, engineering controls, and application of the ALARA process. All of the occupational exposure received during the year, including exposures while employed elsewhere, will be included in the determination of occupational exposure. Radiation exposures from normal background, therapeutic and diagnostic medical radiation, and voluntary participation in medical research programs will not be included in the determination of occupational exposure. Planned special exposures will not be used.

Table 5.1 Occupational Radiation Exposure Limits

Part of the Body	Annual Dose Equivalent Limit[1]
Stochastic Effects	
Whole body, head, trunk, arm, and leg, including elbow and knee	5 rem total effective dose equivalent - sum of deep dose equivalent and the committed effective dose equivalent
Non-Stochastic (Deterministic) Effects	
Arms and legs (includes hands and feet) below knee	50 rem total dose equivalent from shallow and/or deep dose equivalent
Skin of whole body	50 rem shallow dose equivalent
Individual organ or tissue	50 rem sum of deep dose equivalent and the committed dose equivalent
Lens of eye	15 rem dose equivalent
Embryo/fetus during entire gestation period - declared pregnancy	0.5 rem dose equivalent - sum of deep dose equivalent and dose equivalent from internal radionuclides

[1]In addition to the annual dose limits, soluble uranium intake will be limited to 10 milligrams per week in consideration of chemical toxicity.

5.3 Embryo/Fetus Exposure Limits

The occupational dose equivalent limits applicable to the embryo/fetus are detailed in Table 5.1 and apply to a "declared pregnancy." In such a case, a woman elects to declare the pregnancy and limit the dose received by the embryo/fetus as provided in regulatory requirements. In this case, the dose equivalent goal for the embryo/fetus, from the period of conception to birth, from occupational exposure will be no more than 100 mrem.

Efforts will be made to maintain exposures ALARA and to avoid significant variations above a uniform monthly exposure during the pregnancy. If the dose equivalent has exceeded 500 mrem by the time the pregnancy is declared, steps will be taken to ensure that additional occupational exposure is unlikely. Declaration of Pregnancy Form – Attachment 052-4 NA

will be used to document this decision. Embryo/Fetus Initial Dose Calculation – Attachment 052-5 NA will be used to assess the radiation exposure to the embryo/fetus at the time of declaration. Withdrawal of Declaration of Pregnancy – Attachment 052-6 NA will be used to withdraw a pregnancy declaration.

5.4 Minor Exposure Limits

URS' policy is that no worker under 18 years of age will be allowed to work on site where there is the potential for exposure to radiation. This requirement is consistent with EM-385-1-1, Section 6E, which does not allow the occupational radiation exposure of minors.

5.5 Members of the Public Exposure Limits

The annual exposure limit for any member of the public will be limited to 100 mrem total effective dose equivalent, regardless of whether the individual is inside or outside of a controlled area. The dose equivalent in any unrestricted area from external sources will not exceed 2 mrem in any one hour or 50 mrem per year, regardless of occupancy by a member of the public.

5.6 Air and Liquid Effluents

The release of radioactivity in air or liquid effluents to unrestricted areas will be monitored and controlled in accordance with the requirements of 10 CFR 20.1302. Projects subject to state or local regulatory requirements will comply with the effluent limitations in those requirements. For projects at low hazard sites, workplace monitoring and/or conservative modeling can be used to determine compliance with effluent limitations. Records of radioactive effluent monitoring and/or modeling will be generated and maintained to demonstrate compliance with effluent limitation requirements.

6.0 CONDUCT OF RADIOLOGICAL WORK

6.1 Planning

Incorporation of radiological protection requirements such as engineering controls and dose and contamination reduction considerations is the key to the successful execution of work activities in areas where there is a potential for exposure to radiation or radioactive materials. Review and incorporation of such controls and considerations will be made on a site-by-site basis and will be commensurate with the quantity and type of radioactive materials present. Appropriate requirements will be documented in applicable work plans and procedures, and in the HASP.

Projected radiation dose (internal and external) estimates will be made for all jobs involving potential exposure to radiation or radioactive materials. The complexity of these exposure estimates will be commensurate with the levels of radiation and radioactive materials present and the types of activities involved. At a minimum, documentation of these exposure estimates will be placed in the site-specific project file.

Trigger levels for the development and execution of formal ALARA reviews will be adopted on a site-specific basis and documented in the HASP or associated standard operating procedures (SOPs). At a minimum, formal ALARA reviews will be conducted any time a projected individual dose exceeds 200 mrem or collective dose estimates exceed 2,000 person-mrem.

6.2 Work Permits

Radiation Work Permits (RWP; see Radiation Work Permit – Attachment 052-2 NA) will be used to inform workers of area radiological conditions and entry requirements, and to provide a mechanism to relate worker exposure to specific work activities. They will be used at all sites that have a potential for exposure to radiation or radioactive materials. If appropriate, radiological requirements will be combined with other, nonradiological requirements, onto a single Hazardous Work Permit (HWP; see Hazardous Work Permit – Attachment 052-3 NA). Implementation of a work permit program will be made on a site-specific basis, as specified in the HASP and any associated SMSs. However, the following minimum requirements will be met:

- RWP/HWPs will be written based on radiological survey data that are appropriate to characterize the expected work conditions;
- RWP/HWPs will detail the work area and activity that are within their scope and will contain detailed specifications required for protective measures, including dosimetry, air sampling, PPE, respiratory protection, work area preparation, and health physics oversight;
- RWP/HWPs will be reviewed and approved by the SRSO. Modifications to existing RWP/HWPs require the concurrence of the SRSO or designee;
- RWP/HWPS will be posted in a conspicuous area (if possible, they will be posted at the access point to the applicable radiological work area);
- Workers will acknowledge by signature that they have read, understand, and will comply with the RWP/HWPs prior to initial entry to the area and after any revisions to the RWP/HWPs; and
- RWP/HWPs will be updated if radiological conditions change to the extent that protective requirements need modification.

6.3 Control Zones

6.3.1 Access/Egress Procedures

Only appropriately trained, authorized, and qualified personnel are permitted access to radiological controlled areas. The degree of control will be commensurate with the existing and potential radiological hazards within the area and may include, for example, signs and barricades, entranceways locked against ingress, control devices or alarms, or administrative controls. Additional access control measures for High and Very High Radiation Areas will be established in accordance with NRC-specific requirements, as appropriate. The controls will be established so that rapid egress from the controlled area in an emergency is not prevented.

Control measures and established procedures will incorporate a hazardous work permit (HWP) system to ensure appropriate planning, control, hazard communication, and documentation of work activities in Radiological Controlled Areas (RCA) that include Radiation Areas, Contamination Areas, or Airborne Radioactivity Areas. Task-specific HWPs will be used for short-term work in these RCAs with the potential for changing radiological conditions. General HWPs may be used for longer-term activities in RCAs with known, stable radiological conditions.

Personnel frisking and/or monitoring will be conducted before exiting radiological contaminationed areas and other areas where contamination is suspect. If the instruments

indicate greater than 100 cpm over background, a Health Physics Technician will be contacted for decontamination of personnel.

6.3.2 Posting and Labeling

The standard radiation symbol (ANSI N2.1/12.1) in magenta or black on a yellow background (or alternate as provided by regulations) will be used to warn individuals of the presence of radiation and/or radioactive material. Each access point to a controlled or restricted area will be posted with the appropriate identification and instructions. For controlled or restricted areas, each area will be posted as detailed in Table 6.1.

Table 6.1 Posting Requirements

Posting	Definition
Caution Radiation Area	5 mrem in 1 hr at 30 cm
Danger High Radiation Area	100 mrem in 1 hr at 30 cm
Grave Danger, Very High Radiation Area	500 rads in 1 hr at 1 m
Caution Airborne Radiation Area	>1 DAC or 12 DAC hr/week
Caution Radioactive Materials	Radioactive material handled, used, or stored
Contamination Area	Removable radioactive contamination in excess of values listed in Table 7.1

Additionally, NRC Form 3, "Notices to Employees," will be posted in a location visible to all employees who work with or around radioactive materials.

7.0 MONITORING

7.1 Personnel Monitoring

7.1.1 Internal Dosimetry

All personnel who have the potential to receive intakes of radioactive materials that may result in a committed effective dose equivalent of 500 mrem will participate in an appropriate bioassay program. This program will be reviewed and approved by a qualified Health Physicist and will be capable of detecting internal radioactive materials at a level below 10% of the Annual Limit of Intake listed in Appendix B of 10 CFR 20 for each radionuclide for which exposure at this level is likely.

Prior to beginning work in restricted or controlled areas with the potential for internal exposure in excess of the levels stated previously, each radiation worker will have an appropriate baseline bioassay performed. These individuals will also have an appropriate exit bioassay performed when they leave the project.

All personnel who perform routine field activities where the potential for removable surface or airborne radioactive contamination exists will participate in an appropriate routine bioassay program. Special follow-up bioassay procedures will be implemented whenever a suspected intake has occurred or routine bioassay results are above a derived investigation level.

7.1.2 External Dosimetry

Monitoring applies to any individual likely to receive an annual external whole body exposure in excess of 10% of the occupational limit. In addition, personnel monitoring is required for any individual who enters a High or Very High Radiation Area. All personnel dosimetry used will be processed and evaluated by a processor holding a current accreditation under the National Voluntary Laboratory Accreditation Program (NVLAP) of the National Institute of Standards and Technology (NIST). The work-related radiation exposure history will be acquired from past employers where radiation monitoring was required.

7.1.3 Summation of Internal and External Exposures

Internal committed effective dose equivalents and external effective dose equivalents during the year will be combined to determine the annual total effective dose equivalent in accordance with the requirements of federal and state regulations. Generally, summation will be required when intakes exceed 10% of the annual limit on intake, may result in a total effective dose equivalent of 50 mrem for minors or visitors, or may result in a dose equivalent of 50 mrem to the embryo/fetus for declared pregnant women. The deep dose equivalent to the whole body may be used as the effective dose equivalent for external exposures. The quality factors (Q) prescribed by the applicable regulatory jurisdiction will be used to calculate the dose equivalent in rem from the absorbed dose.

7.2 Medical Surveillance

No specific medical surveillance requirements exist for exposure to radiation levels at occupational levels. General medical surveillance requirements for all hazardous waste sites are contained in each HASP. URS' medical monitoring program is administered in accordance with the URS SMS 024 – Medical Screening and Surveillance.

All cases of overexposure and suspected ingestion or inhalation of radioactive materials must be reported to the SRSO immediately. The URS Medical Consultant will advise the SRSO on the type(s) of test(s) required to accurately assess exposure effects.

7.3 Workplace Monitoring

7.3.1 Surveys

Radiological monitoring and surveys of radiation exposure levels, contamination, and airborne radioactivity will be conducted to

- Characterize workplace conditions and detect changes in those conditions;
- Verify the effectiveness of physical design features, engineering and process controls, and administrative control procedures;
- Demonstrate regulatory compliance;
- Detect the gradual buildup of radioactive material;
- Identify and control potential sources of personnel exposure; and
- Identify areas requiring postings.

Monitoring will be performed only by trained and qualified personnel and will be conducted as specified in the HASP and associated RWPs.

At a minimum, radiological surveys will be conducted:

- Once per shift at entrance or exit points between contamination areas and clean areas;
- Daily in RCAs;
- Weekly in radiation and/or contamination areas;
- Weekly in clean areas; and
- As specified on RWPs/HWPs.

7.3.2 Air Sampling

General area and personal air sampling will be conducted in accordance with the guidance in NRC Regulatory Guide 8.25. Air sampling will be employed when necessary to determine whether confinement of radioactive material is effective, to determine workplace administrative controls required, to estimate worker intakes, and to determine what PPE is appropriate.

General area air sampling for airborne radioactivity will be conducted with high-volume air samplers where the potential for airborne radioactivity is above background levels. High-volume air samplers are those with sufficient flow rate to achieve a minimum detectable activity (MDA) of 10% of the applicable derived air concentration (DAC) in an 8-hour shift. For small jobs with documented minimal airborne radioactivity potential, general area air sampling for airborne radioactivity will not be required. Air samples will be analyzed in accordance with written procedures**.** In areas with a potential for short-term airborne excursions, representative grab samples will be collected in the immediate vicinity of work being performed to determine whether the area is an airborne radioactivity area requiring additional work controls and whether personal breathing-zone air sampling is necessary to assess the worker's intake of airborne radioactive materials. As with the protocol for personal sampling, high-volume sample results will be compared with the most conservative DAC.

When required to estimate worker intakes, representative personal air sampling from each field team working in radiologically contaminated areas will be conducted for airborne radioactivity in the breathing zone. To gauge employee exposure potential, the data will be compared with the DAC that is the most conservative for the contaminant(s) expected to be present. DACs for radioactive contaminants in Appendix B to 10 CFR 20 will be used to assess exposure potentials, as appropriate.

7.4 Release of Materials from Contamination Areas

Radiological contamination survey, documentation, and labeling requirements will be established for all property/material released from an RCA. All equipment, materials, and property used in an RCA established for contamination control will be considered as potentially contaminated and will not be released to an uncontrolled or unrestricted area until they have been surveyed and meet the unconditional release limits listed in Table 7.1 or site-specific requirements.

If the property/material to be released either cannot be monitored using standard survey techniques or is a volume or bulk material, such as liquids, soils, etc., it will be considered potentially contaminated. A special property/waste release evaluation will be conducted prior to release. The release limits for these materials will be established in accordance with specific guidance from the cognizant regulatory authority. All surveys and evaluations for release of potentially contaminated property/material to uncontrolled or unrestricted areas will be documented.

Table 7.1 Surface Radioactivity Release Limits

Radionuclide	Removable dpm/100 cm^2	Total (Fixed + Removable) dpm/100 cm^2
U-natural, U-235, U-238, and associated decay products	1,000	5,000
Transuranics, Ra-226, Ra-228, Th-230, Th-228, Pa-231, Ac-227, I-125, I-129	20	100
Th-natural, Th-232, Sr-90, Ra-223, Ra-224, U-232, I-126, I-131, I-133	200	1,000
Beta-gamma emitters (i.e., those with other than alpha emitters or spontaneous fission) except Sr-90 or radionuclides listed in this table	1,000	5,000

7.5 Instrument Calibration

Radiation detection instrumentation will be provided as appropriate for performing necessary surveys and monitoring. The instrumentation will be selected based upon the type of radiation detected, measurement capability, and range in accordance with the radiological hazards present or anticipated for the project.

Calibration of radiological instruments and equipment will be performed by the vendor or a calibration service in accordance with ANSI N323, 1997, using standards traceable to the NIST primary standards. The calibration certificate will be maintained by the SRSO.

Field calibration of counting instrumentation in accordance with approved written procedures is authorized if it meets the previous requirements and the source calibration certificate and if documented detection efficiency determinations are maintained in the site-specific project file. Each instrument or piece of equipment will have a calibration sticker with an expiration date affixed.

At a minimum, performance tests of radiological instruments will be conducted before use. Unless more stringent site-specific criteria have been established (as documented in the HASP), satisfactory performance test results will be within +/- 20% of the expected response. Instruments that do not meet performance test criteria, are found to be out of calibration, or are defective will be removed from service until repaired and/or calibrated. The results of these checks will be recorded in a daily source check log by the performer and will be maintained in the site-specific project file. All performance tests will be conducted in accordance with ANSI N323, 1997, guidance using the manufacturer's recommendations and approved written procedures.

8.0 PERSONNEL PROTECTIVE EQUIPMENT

8.1 Use and Selection of Protective Clothing

Personal protective equipment (PPE) will be selected based on the contamination levels in the work area and the anticipated work activity, ALARA and safety considerations, and consideration of nonradiological hazardous materials that may be present. Surfaces are considered radiologically contaminated if they are above Table 7.1 levels. PPE provided will be in good condition and free of chemical or radioactive contamination.

Full Set

a. Coveralls (Tyvek® or cotton)
b. Cotton glove liners
c. Rubber or chemical resistant gloves
d. Shoe covers
e. Protective overshoes
f. Hood (Tyvek® or cotton)

Double Set

a. Two pairs of coveralls
b. Cotton glove liners
c. Two pairs of gloves
d. Two pairs of shoe covers
e. Protective overshoes
f. Hood (Tyvek® or cotton)

Protective clothing and equipment selected for project tasks will be described in the HASP, together with procedures for donning and removing PPE without spreading contamination or contaminating the worker. For projects using a RWP system, the necessary PPE for a task will be specified by the RWP.

8.2 Use and Selection of Respiratory Protection Devices

URS' Respiratory Protection Program (URS SMS 042 – Respiratory Protection) details specific procedures for respiratory usage, fit, cleaning, etc.

Engineering control measures will be provided to limit the concentrations of radioactivity in air to levels below those that constitute an airborne radioactivity area to the extent feasible. When this level is not feasible, other methods such as administrative controls and respiratory protection will be used to limit the potential for intake of radioactive material.

Only respiratory protection equipment that is tested and certified by the National Institute for Occupational Safety and Health (NIOSH) will be used. Protection factors listed in Appendix A of 10 CFR 20 will be used in the assessment of potential radioactive material intake.

Selection of appropriate respiratory protection devices will be designated within either the HASP or RWP. At a minimum, respiratory protection devices will be selected so that a protection factor greater than the multiple by which peak concentrations or airborne radioactivity exceed the values specified in Appendix B of 10 CFR 20 is not exceeded. Only respiratory protection equipment that has been specifically certified for emergency use by National Institute for Occupational Safety and Health (NIOSH)/ Mine Safety and Health Administration (MSHA) will be used as emergency devices.

Whenever respiratory protection will be used at a site, the following additional minimum requirements will be met:

- Air sampling will be performed to identify the potential hazard, permit proper equipment selection, and estimate exposures;
- Surveys and bioassays as appropriate will be performed to evaluate actual intakes;
- Respirators will be tested for operability immediately prior to each use; and
- Written procedures will be available regarding selection, fitting, issuance, maintenance, and testing of respirators (including testing for operability prior to each use), supervision and training of personnel, monitoring (including air sampling and bioassays), and recordkeeping.

9.0 RADIOACTIVE MATERIAL ACCOUNTABILITY AND CONTROL

All procurement, receipt, and storage of radioactive material will be coordinated with the individual or organization responsible for radiation protection at the project site. A source custodian and documented inventory record will be established and maintained for radioactive sources. All sources brought on site by external organizations will not be allowed into areas under company control without prior notification and approval by the company individual or organization responsible for radiation protection. Radioactive materials licenses will be required for sources that exceed exempt quantities.

Transportation of radioactive material (specific activity >2000 pCi/g) in commerce, generally off site, will be in accordance with DOT requirements in 49 CFR 170 through 180, International Air Transport Association (IATA) regulations, and other federal, state, and local regulations, as applicable.

10.0 DECONTAMINATION

10.1 Personnel

The guideline for determining the presence of skin contamination on personnel is detectable radiological contamination above background.

If necessary, decontamination of personnel will be performed using soap and water, taking care to ensure that loose contamination is prevented from entering body openings. Decontamination fluids will be collected and disposed of as radioactive waste. If contamination has been transferred to the skin with chemical carriers or if repeated decontamination attempts with soap and water are unsuccessful, additional decontamination steps may be required. If possible, sufficient radiological measurements will be collected prior to decontamination so that exposure to the skin may be evaluated.

Prior to attempting any additional methods, medical assistance and direction will be sought. Potential skin decontamination methods that may be used (under direction of medical staff) include titanium dioxide paste followed by rinsing, a saturated solution of potassium permanganate followed by a rinse using a 5% solution of sodium acid sulfate, and complexing agents such as ethlylene diamine tetraceticacid (EDTA) or diethylenetriaminepenta-acetic acid (DTPA).

Specific decontamination procedures and documentation requirements are contained in site-specific SOPs. Nonradiological decontamination procedures are contained within the HASP.

10.2 Equipment

Surface contamination levels presented in Table 7.1 will be used to determine whether a piece of equipment is contaminated with radioactive materials. When decontamination is necessary, decontamination will be performed using techniques that are appropriate based on site-specific conditions. Generally, dry decontamination methods such as high-efficiency particulate air (HEPA) vacuuming or wipe downs are preferred when facilities for the collection of radiological contaminated wastewater are not in place. If adequate facilities exist for the collection of such fluids, it may be appropriate to use a wet decontamination technique. Additional decontamination methods include sand or other abrasive blasting.

Specific decontamination procedures and decontamination requirements are contained in the site-specific SOPs. Nonradiological equipment decontamination procedures are contained within the HASP.

11.0 WASTE MANAGEMENT

The generation, treatment, storage, packaging, and transport of radioactive waste for disposal will be in accordance with the applicable requirements of 10 CFR 20 Subpart K, depending on the cognizant regulatory authority. Materials suspected of being mixed waste (RCRA/TSCA/etc. hazardous substances combined with radioactive materials) will be identified and segregated as soon as practical to avoid combining mixed waste with other waste forms.

Radioactive waste will not be disposed of except through coordination with the designated authority (the USACE Hazardous, Toxic and Radioactive Waste Center of Expertise).

Provisions for the minimization of radioactive waste generation will be implemented on each site, as appropriate. Although the scope of this waste minimization program will be commensurate with the level of radioactive materials present and activities conducted at each site, at a minimum, the following guidelines will be followed:

- Removal of excess/unnecessary packaging material prior to bringing materials into radiological controlled areas;
- Restriction of materials entering controlled areas to those materials necessary for performance of work;
- Restriction of the quantities of hazardous materials, such as paints, solvents, chemicals, cleaners, and fuels, entering radiological areas;
- Substitution of reusable items in place of disposable ones, when practical;
- Selection of consumable materials such as PPE that is compatible with waste processing systems, volume reduction, and waste acceptance criteria;
- Survey of potentially contaminated material leaving controlled areas to separate uncontaminated materials from contaminated materials; and
- Emphasis on waste reduction methodologies in training.

Additional waste minimization procedures and/or requirements will be identified in each site-specific work plan and will be commensurate with the levels of radioactive materials present and activities being performed.

12.0 EMERGENCY PROCEDURES

Site-specific radiological emergency procedures commensurate with the level of hazard will be developed or client procedures will be adopted prior to the initiation of work. The procedures will address, as appropriate, severe weather actions, transportation accidents or spills, medical emergencies, personnel contamination, and onsite emergency response and notification requirements involving radioactive materials. The scope of the procedures will be based on a contractual agreement with the client with respect to the role employees are expected to fulfill in an emergency event.

At a minimum, emergency procedures will take into account client emergency response procedures and the responsibilities of offsite state and local emergency response agencies.

All site personnel will be instructed in their emergency responsibilities and the emergency procedures. For high hazard projects, if the client has not done so, nearby hospitals and fire department(s) will be contacted and briefed on what hazards may be expected from radioactive material or toxic substances during an emergency.

13.0 TRAINING

Training will be provided to general employees, radiation workers, and radiological control staff at a project site under this Radiological Protection Program. Periodic retraining will be conducted whenever a significant change to the Radiation Protection Program or implementing procedures occurs or at a frequency consistent with applicable regulatory or client requirements and commensurate with radiological hazards present on the site. A minimum retraining frequency of two years will be implemented.

All formal training under the program will verify individual knowledge by an appropriate examination. Documentation of training, consisting of the individual's name, date of training, topic(s) covered, pass or fail, and the name of the certifying official, will be generated. No employee will be permitted to independently perform tasks inside of a radiological controlled area until the appropriate training and qualification requirements are met.

Radiological Worker Training. At a minimum, all personnel entering an area where radioactive material or radiation-generating devices are used, and where there is a potential for an individual to receive a Total Effective Dose Equivalent (TEDE) of 100 mrem or more in one year, will receive instruction in:

- The presence of the material or device;
- Health and safety problems associated with exposure to radiation, including the potential effects of radiation on a pregnant female, the fetus, or the embryo;
- Precautions and controls used to control exposure;
- This Radiation Protection Program; and
- Their rights and responsibilities.

Additional training requirements will be determined on a site-specific basis and will be commensurate with the radiological hazards present on each site. These additional requirements will be documented in the applicable HASP.

14.0 AUDITS

An internal audit of the content and field implementation of this Radiation Protection Program will be conducted at least once per year by the Business Radiation Safety Officer, Vice President/Director of Health, Safety, and Environment (HSE), or designee. Audit findings will be reported in writing to the appropriate personnel within URS.

15.0 RECORDS MANAGEMENT

Radiation Protection Program records will be maintained to document compliance with regulatory requirements and the exercise of due diligence in the control of radiological hazards for the protection of employees, members of the public, and the environment. These records will be transferred to the project file at the conclusion of the project.

At the completion of site activities, copies of exposure monitoring records will be sent to URS' Occupational Health Specialist for inclusion into each respective employee's medical file. Exposure monitoring records for subcontract personnel will be transferred to each respective subcontract organization. Copies of radiation monitoring results for all site personnel will be provided to an individual consistent with the requirements of 10 CFR 19.13. Upon completion of work at a site, exposure data pursuant to the 10 CFR 19.13 requirement will be provided for URS employees only. Subcontract personnel will be required to make requests for exposure records directly to their respective employer.

Exposure records that are maintained by URS will be maintained in a manner consistent with applicable Privacy Act requirements. The records will be available for retrieval over a period not less than 75 years after the date of creation of the record. All quantities used in the records will be in special units of curie, rad, or rem, including multiples and subdivisions of these units. Records identified with an individual's name or identifying number will be available upon request from that individual.

Records to be maintained include the following (as available):

- Doses received by individuals, for whom monitoring was required, during previous employment;
- Doses received by individuals for whom monitoring was required;
- Dose assessments and organ burdens for individuals for whom bioassay was performed.
- Doses to the embryo/fetus of a declared pregnant employee;
- Written declarations of pregnancy;
- Written withdrawal of declaration of pregnancy;
- Results of surveys for radiation and radioactive material in the workplace and outside of controlled or unrestricted areas as required by regulatory requirements or the Radiation Protection Program;
- Results of surveys for the release of material or equipment to uncontrolled or unrestricted areas;
- Records of effluents and radioactive waste disposal under control;
- Results of calibrations performed on radiological instruments and quality control checks for radiological instrumentation and personal monitoring devices;
- Records of ALARA evaluations and control actions;
- Records of radiological training completed, including general employee radiological training;
- Records of internal reviews and audits with corrective actions closeout; and
- Records of regulatory agency inspections and audits with corrective actions closeout.

Interim storage of these radiological records will be the responsibility of the SRSO and will be maintained in a readily retrievable, controlled manner. Upon completion of each site project, and upon request, copies of all radiation exposure records will be made available to USACE.

URS	Health, Safety and Environment **RADIATION WORK PERMIT**	Attachment 052-2 NA Issue Date: July 2000 Revision 2: December 2009

RWP Number:	Work Location:
RWP Job Description:	Start Date/Time:
	Expiration Date/Time:
	Requested By:
Type of RWP: ☐ General ☐ Job-Specific	Request Date:

Rad Training Requirements	ALARA Requirements	Survey Frequency	Pre-Job Radiation Levels
☐ Rad Worker I	☐ ALARA Review	☐ Constant HP Coverage	☐ General Area Dose Rate:
☐ Rad Worker II	☐ Pre-Job Briefing	☐ Periodic HP Coverage*	☐ Job Specific Dose Rate:
☐ Rad Safety Officer	☐ Air Sampling	* Define periodic coverage:	☐ Contamination Level:
☐ Site Specific	☐ Other (specify)		☐ % DAC:
☐ Other (specify)			☐ Other (specify):

Required Personnel Protective Clothing and Equipment

Anti-Cs		Monitoring
☐ Hood	☐ Rubber Gloves	☐ TLD
☐ Coveralls	☐ Cotton Glove Liners	☐ Extremity TLD
☐ Coveralls (2 pair)	☐ Tape Coveralls at Wrist and Ankles	☐ Pocket dosimeter
☐ Rubber Shoe Covers	☐ Other (specify):	☐ Hand-held monitor
☐ Cloth Boot Covers		☐ Hand/foot monitor/frisker
☐ Latex Gloves		☐ Whole body frisk
☐ Cotton Work Gloves		☐ Other (specify):

Respiratory Protection	Special Precautions	Additional Precautions/Requirements
☐ Full-face (Negative Pressure)*	☐ "Buddy System" in Effect	Describe:
☐ Powered Air-Purifying*	☐ Special Training or Pre-Job Briefing Required	
☐ Supplied Air	☐ Special Personnel Frisking Considerations	
☐ Self-contained Breathing Apparatus	☐ Dose/Contamination Reduction Considerations	
☐ Other (specify):	☐ Stay Time Controls	
*Specify cartridge or canister type	☐ Other (specify)	

Radiological Work Zone Entry Log

Print Name	Signature	Employee #	TLD Initial	TLD Exit	Total Dose	Time Enter	Time Exit	Time Enter	Time Exit

Approvals	Date	Termination	Date
Site RSO:		Site RSO:	
Site SHO:		Reason:	
Site Manager:			

URS	Health, Safety and Environment **HAZARDOUS WORK PERMIT**	Attachment 052-3 NA Issue Date: July 2000 Revision 2: December 2009

HWP Number:	Work Location:
HWP Job Description:	Start Date/Time:
	Expiration Date/Time:
	Requested By:
Type of HWP: ☐ General ☐ Job-Specific	Request Date:
Is a Radiological/ALARA Review Required? ☐ No ☐ Yes	

Chemicals/Substances Present	Combustible/Flammable Vapors	Pre-Job Radiation Levels	Site Surveys			
		General Area Dose Rate:	**Type**	**Number**	**Date**	**By**
		Job-Specific Dose Rate:				
		Contamination Level:				
		%DAC:				
		Other (specify):				

Required Personnel Protective Clothing and Equipment

Hands	Feet/Legs	Body
☐ Cotton Work Gloves	☐ Steel-Toe/Shank Boots/Shoes	☐ Cotton Coveralls
☐ Latex Gloves	☐ Disposable Shoe Covers	☐ Tyvek® Coveralls (regular)
☐ Rubber Gloves	☐ Other (specify):	☐ Tyvek® Coveralls (coated)
☐ Other (specify):		☐ Other (specify):
Respiratory	**Head/Eyes**	**Miscellaneous**
☐ Full-face (Negative Pressure)*	☐ Hard Hat	☐ Tape Coveralls to Gloves & Boots
☐ Powered Air-Purifying*	☐ Safety Glasses	☐ Fall Protection
☐ Supplied Air/SCBA	☐ Goggles	☐ Hearing Protection
☐ Other (specify):	☐ Face Shield	☐ Other (specify):
*Specify cartridge or canister type:	☐ Other (specify):	

Special Instructions, Requirements, and Limiting Hazardous Conditions		Dosimetry	Indiv.	Group
☐ MSDS	☐ "Buddy System" in Effect	TLD Badge		
☐ Fire Watch	☐ Safety and Health Personnel	Extremity TLD		
☐ Portable Fire Extinguisher	☐ Special Training/Pre-Job Briefing	Pocket dosimeter		
☐ Lockout/Tagout	☐ Excavation Permit	Other (specify)		
☐ Confined Space Entry	☐ Fire Retardant Clothing	**IH Monitoring**	**Indiv.**	**Group**
☐ Pre-Entry Monitoring	☐ Special Personnel Frisking Considerations	Air sampler		
☐ Emergency Response Equipment	☐ Dose/Contaminant Reduction Considerations	Passive sampler		
☐ Radio Communication	☐ Stay Time Controls	Grab sampler		
☐ Portable Eyewash	☐ Other (specify):	Other (specify)		

Work Zone Entry Log

Print Name	Signature	Employee #	TLD Initial	TLD Exit	Total Dose	Time Enter	Time Exit	Time Enter	Time Exit

Approvals	Date	Termination	Date
Site RSO:		Site RSO:	
Site SHO:		Reason:	
Site Manager:			

URS	Health, Safety and Environment **- STRICTLY PRIVATE -** **DECLARATION OF PREGNANCY FORM**	Attachment 052-4 NA Issue Date: July 2000 Revision 2: December 2009

To be completed by radiological worker:

Name: _____ Employer: _____ ID#: _____

Date/Time: _____ Work Location: _____ Supervisor: _____

Estimated Date of Conception _____ Estimated Delivery Date _____

I am voluntarily declaring my pregnancy for the purpose of providing additional protection from exposure to ionizing radiation to my embryo/fetus. I understand that, as a result of this declaration, I may be offered a temporary work assignment that does not involve occupational radiation exposure. However, if I choose to continue work involving occupational radiation exposure, my activities will be restricted so that any occupational radiation exposure received by my embryo/fetus does not exceed the limits set forth by the US NRC. I agree to comply with these restrictions. I also understand that I may revoke this declaration in writing at any time and must do so in order to have these restrictions lifted.

Signature: _____ Date: _____

The shaded areas are to be completed by Site Radiation Safety Officer:

Estimated external dose from estimated conception date until declaration date:

_____

Estimated internal dose equivalent to embryo/fetus from estimated conception date until declaration date:

_____

Remaining dose for balance of gestation period:

_____

Adjusted uniform monthly dose limit:

_____

Determined by: _____ Date: _____

Site Manager: Specify any work restrictions:

_____

_____

_____

Acknowledgment of Receipt from Worker and Acceptance of Indicated Work Restrictions:

Project Manager Signature: _____ Date: _____

Radiation Safety Officer Signature: _____ Date: _____

URS	Health, Safety and Environment **- STRICTLY PRIVATE -** **EMBRYO/ FETUS INITIAL DOSE CALCULATION**	Attachment 052-5 NA Issue Date: July 2000 Revision 2: December 2009

Name:		Employer/ID:
Declaration Date/Time:		
Estimated Conception Date:		Estimated Delivery Date:
A.	Estimated External Dose Equivalent to embryo/fetus from estimated conception date until declaration date:	mrem
B.	Estimated Internal Dose Equivalent to embryo/fetus from intakes occurring from estimated conception date until declaration date:	mrem
C.	Total Current Dose Estimate *(sum of A and B, above)*:	mrem
D.	Remaining dose for balance of gestation period *(450 mrem − Dose from C, above)*:	mrem
E.	Adjusted Uniform Monthly Dose Limit *(Divide remaining dose from D by the number of months from declaration date to estimated delivery date;should not exceed 50 mrem)*:	mrem

Note to analyst: *After completing information required on this form, transfer information regarding Estimated External Dose (A), Estimated Internal Dose (B), Remaining Dose (D), and Adjusted Uniform Monthly Dose Limit (E) to Worker's Declaration of Pregnancy form.*

Above data transferred by: Date:

URS	Health, Safety and Environment **- STRICTLY PRIVATE -** **WITHDRAWAL OF DECLARATION OF PREGNANCY**	Attachment 052-6 NA Issue Date: July 2000 Revision 2: December 2009

Name: Employer ID:

I am withdrawing my declaration of pregnancy which was executed on (Date) _____. I understand that, as a result of signing below and submitting this form, any work restrictions that have been imposed as a result of my previously submitted pregnancy declaration will be lifted.

Worker's Signature	Date
Project Manager's Signature	Date
Radiation Safety Officer's Signature	Date

URS SAFETY MANAGEMENT STANDARD

Drilling Safety Guidelines

1. Applicability

This standard applies to the operations of URS Corporation and its subsidiary companies.

2. Purpose and Scope

The purpose of this standard is to provide an overview for working safely around drilling operations with truck-mounted and other engine-powered drill rigs. The procedure addresses off-road movement of drill rigs, overhead and buried utilities, use of augers, rotary and core drilling, and other drilling operations and activities.

3. Procedures

The associated implementing regional procedures for this standard are included as attachments:

SMS 056 NA – North America; Australia / New Zealand

SMS 056 INT – International Operations (including Europe, Asia, South America and Africa)

URS SAFETY MANAGEMENT STANDARD

Drilling Safety Guidelines

1. Applicability

This standard applies to URS Corporation and its subsidiary companies on projects using truck-mounted or other engine-powered drill rigs. The primary responsibility for drilling safety is with the drilling contractor.

2. Purpose and Scope

The purpose of this standard is to provide an overview for working safely around drilling operations with truck-mounted and other engine-powered drill rigs. The procedure addresses off-road movement of drill rigs, overhead and buried utilities, the use of augers, rotary and core drilling, and other drilling operations and activities. More detailed drilling safety guidelines are provided in the document *Environmental Remediation Drilling Safety Guidelines.*

3. Implementation

Implementation of this standard is the responsibility of the URS manager directing activities of the facility, site, or project location.

Drill rig safety and maintenance is the responsibility of the drill rig operator. Drilling subcontractors must be qualified in accordance with SMS 046 – Subcontractor Health, Safety and Environmental Requirements.

4. Requirements

A. General Safety Guidelines

URS technicians, geologists, engineers, or other field staff assigned to oversee drilling operations or collect soil samples will observe the following guidelines:

1. Require a meeting at project startup regarding the drill rig operator's responsibility for rig safety, and any site- and equipment-specific safety requirements.

2. Excluding geoprobe activities, set up any sample tables and general work areas for the URS field staff at a distance of at least the height of the fully extended mast plus 5 feet (1.52 meters), and no less than 30 feet (10 meters) from the rig.

3. URS engineers, technicians, and geologists will not assist the drillers with drilling equipment or supplies, and will not operate the drill rig controls except to activate the emergency shutoff, if needed.

4. Require that all rotary drilling equipment have an emergency shut off/ kill switch. The location of the switch should be reviewed with all field staff.

5. Drilling rigs shall be inspected by the lead driller prior to use daily. Attachment 056-1 NA – Drill Rig Inspection Checklist may be utilized to document the inspection.

6. Sit-on direct push rigs are not permitted on URS sites unless the rig have been modified (in accordance with manufacturer's requirements) to be operated by remote control or the rig has been manufactured with a rollover protection system and seat belt.

7. When using the tooling winches on a drill rig, the down-hole rods shall not extend above the crown of the drilling mast when retrieving soil sampling tools. Drilling rods shall be lifted/lowered using a hoisting plug and not a friction device (e.g., pipe dog, pulling plates etc.).

8. Use of J-hooks and cat-heads is prohibited.

B. Movement of Drill Rigs

1. Before moving a rig, the operator must do the following:

   a. To the extent practical, walk the planned route of travel and inspect it for depressions, gullies, ruts, and other obstacles.

   b. Check the brakes of the truck/carrier, especially if the terrain along the route of travel is rough or sloped.

   c. Discharge all passengers before moving on rough or steep terrain.

   d. Engage the front axle (on 4x4, 6x6, etc., vehicles) before traversing rough or steep terrain.

2. Driving drill rigs along the sides of hills or embankments should be avoided; however, if side-hill travel becomes necessary, the operator must conservatively evaluate the ability of the rig to remain upright while on the hill or embankment. The possibility must be considered that the presence of drilling tools on the rig may reduce the ability of the rig to remain upright (raises the center of mass of the rig).

3. Logs, ditches, road curbs, and other long and horizontal obstacles should be approached and driven over squarely, not at an angle.

4. When close lateral or overhead clearance is encountered, the driver of the rig should be guided by another person on the ground.

5. Loads on the drill rig and truck must be properly stored while the truck is moving, and the mast must be in the fully lowered position.

6. After the rig has been positioned to begin drilling, all brakes and/or locks must be set before drilling begins. If the rig is positioned on a steep grade and leveling of the ground is impossible or impractical, the wheel of the transport vehicle must be blocked and other means employed of preventing the rig from moving or toppling over.

C. Buried and Overhead Utilities

1. The location of overhead and buried utility lines must be determined before drilling begins, and the locations should be noted on boring plans and/or assignment sheets.

2. When overhead power lines are close by, the drill rig mast should not be raised unless the distance between the rig and the nearest power line is at the minimum distance stated in SMS 034 – Utility Clearances and Isolation. The drill rig operator or assistant should walk completely around the rig to make sure that adequate clearance exists.

3. The rig operator should be aware that when the drill rig is positioned near an overhead line, hoist lines and power lines can be moved towards each other by wind. When necessary and approved by the project manager, the utility and/or power lines may be shielded, shut down, or moved by the appropriate personnel.

4. Before performing work, for additional information, please refer to SMS 034 – Utility Clearances and Isolation.

D. Clearing the Work Area

1. Before a drill rig is positioned to drill, the area on which the rig is to be positioned must be cleared of removable obstacles and the rig must be leveled if it is sloped. The cleared/leveled area should be large enough to accommodate the rig and supplies.

E. Safe Use of Augers

1. Never place hands or fingers under the bottom of an auger flight or drill rods when hoisting the augers or rods over the top of another auger or rod in the ground or other hard surfaces, such as the drill rig platform.

2. Never allow feet to get under the auger or drill rod while they are being hoisted.

3. When the drill is rotating, stay clear of the drill string and other rotating components of the drill rig. Never reach behind or around a rotating auger for any reason.

4. Move auger cuttings away from the auger with a long-handled shovel or spade; never use hands or feet.

5. Never clean an auger attached to the drill rig unless the transmission is in neutral or the engine is off, and the auger has stopped rotating.

6. Do not wear loose clothing or jewelry while working near the drill rig. Long hair must be pulled back to avoid entanglement with moving parts.

7. Hearing protection is required when working near an operating drill rig.

8. When pulling/lifting augers, a clevis pin or other closed device shall be used. Use of J-hooks is prohibited.

F. Rod Separation

1. Do not use manual tools (e.g., pipe wrenches) in combination with rotation of the drill stem. Manual tools are not designed for the load, and may break. The use of such tools creates a significant impact hazard for those in the work area, because they rotate with the drill stem. URS does not permit drillers to use manual tools in combination with a rotating drill stem to break rods. Manual tools may be used if the drill stem is isolated/positively disengaged.

2. Mechanical means of rod separation that are permitted include:

   a. Opposing hydraulic controls.

   b. Rod locking devices.

   c. Hydraulic breakout tools.

   d. Hydraulic foot clamps.

G. Safe Use of Hand Tools

Review SMS 064 – Hand Safety for information regarding hand tools in addition to the guidelines provided below:

1. Use each tool to perform only tasks for which it was originally designed.

2. Repair damaged tools before use, or discard them.

3. Wear safety goggles or glasses when using a hammer or chisel. Nearby co-workers and bystanders are required to wear safety goggles or glasses also, or move away.

4. Clean tools and store them in an orderly manner when they are not in use.

H. Safe Use of Wire Line Hoists, Wire Rope, and Hoisting Hardware

1. Whenever wire line hoists, wire rope, or hoisting hardware are used, the safety rules described in Title 29 Code of Federal Regulations (CFR) 1926.552, and guidelines contained in the Wire Rope User's Manual published by the American Iron and Steel Institute, will be followed. The driller will provide written reports (upon request) documenting inspections of equipment.

I. Traffic Safety

1. Drilling in streets, parking lots, or other areas of vehicular traffic requires definition of the work zones with cones, warning tape, etc., and compliance with local police requirements. Refer to SMS 032 – Work Zone Traffic Control.

J. Fire Safety

1. Fire extinguishers (type ABC) will be kept on or near drill rigs for fighting small fires.

2. If methane or other flammable gases or vapors are suspected in the area, a combustible gas indicator (CGI) will be used to monitor the air near the borehole, with all work to stop at 20 percent of the Lower Explosive Limit (LEL).

3. Work must stop during lightning storms.

K. Drilling at Potential MEC/UXO Sites

If the project site is suspected of containing munitions and explosives of concern (MEC) or unexploded ordnance (UXO), the UXO team will conduct a reconnaissance and MEC/UXO avoidance to provide clear access routes to each site before drilling crews enter the area. The following procedures will be implemented:

1. Drilling operations on an MEC/UXO site will not be conducted until a complete plan for the site is prepared and approved by the URS UXO Safety Officer. MEC/UXO avoidance must be conducted during drilling operations on known or suspect MEC/UXO sites. Refer to SMS 039 – Munitions Response/Munitions and Explosives of Concern.

2. The UXO team will identify and distinctly mark the boundaries of a clear approach path for the drilling crews, vehicles, and equipment to enter the site. This path will be, at a minimum, twice the width of the widest vehicle. No personnel will be allowed outside any marked boundary.

3. If MEC/UXO is encountered on the ground surface, the UXO team will clearly mark the area where it is found, report it to the proper authorities, and divert the approach path around it.

4. The UXO team will conduct an access survey using the appropriate geophysical instrument over the approach path for avoidance of MEC/UXO that may be in the subsurface. If a magnetic anomaly is encountered, it will be assumed to be MEC/UXO, and the approach path will be diverted around the anomaly. UXO personnel only will operate the appropriate geophysical instrument and identify MEC/UXO.

5. An incremental geophysical survey of the drill-hole location(s) will be initially accomplished by the UXO team using a hand auger to install a pilot hole. If MEC/UXO is encountered or an anomaly cannot be positively identified as inert material, Hazardous, Toxic, and Radioactive Waste (HTRW) sampling personnel will select a new drill-hole location.

6. Once the surface of a drilling site has been cleared and a pilot hole established as described above, the drilling contractor will be notified that the site is available for subsurface drilling.

7. Additional guidance for MEC/UXO support during drilling activities is provided in SMS 039 – Munitions Response/Munitions and Explosives of Concern.

L. Protective Gear

1. Minimum Protective Gear

   At a minimum, items listed below must be worn by all staff working within 30 feet (10 meters) of drilling activities.

   a. Hearing protection.

   b. Hard hat.

   c. Eye protection (safety glasses, goggles, or face-shield).

   d. Safety shoes (steel-toed shoes or boots).

2. Other Gear

   Items listed below must be worn when conditions warrant their use. Some of the conditions are listed after each item.

   a. Safety Harnesses and Lifelines: Safety harnesses and lifelines must be worn by all persons working on top of an elevated derrick beam or mast. Lifelines should be secured at a position that will allow a person to fall no more than 6 feet (2 meters). OSHA Fall Protection (1926 Subpart M) requirements apply. Refer to SMS 040 – Fall Protection for additional information.

   b. Life Vests: Life vests must be used for work over water. Refer to SMS 027 – Work Over Water for additional information.

5. Resources

A. International Association of Drilling Contractors Safety Alerts http://iadc.org/alerts.htm

B. U.S. Occupational Safety and Health Administration (OSHA) Standard Fall Protection – 29 CFR 1926 Subpart M

C. U.S. OSHA - 29 CFR 1926.552, Material Hoists, Personnel Hoists and Elevators

D. Environmental Remedial Safety Drilling Guidelines

E. SMS 026 – Noise and Hearing Conservation

F. SMS 027 – Work Over Water

G. SMS 032 – Work Zone Traffic Control

H. SMS 034 – Utility Clearances and Isolation

I. SMS 039 – Munitions Response/Munitions and Explosives of Concern

J. SMS 040 – Fall Protection

K. SMS 046 – Subcontractor Health, Safety and Environment Requirements

L. SMS 064 – Hand Safety

M. Attachment 056-1 NA – Drill Rig Inspection Checklist

URS	Health, Safety and Environment **DRILL RIG INSPECTION CHECKLIST**	Attachment 056-1 NA Issue Date: December 2009 Revision 6: March 2013

Site / Project Name _____

Rig Inspector (Name/Company) _____

RIG INFORMATION:

Rig Type Rotary/Auger Drilling Rig ☐ Direct Push Type (DPT) ☐

Owner _____ VIN# _____

Year/Make _____ Mileage _____

Model _____ Drill Hrs _____

INSTRUCTIONS: Each shift must inspect all applicable items. If an unsatisfactory condition (fail) is observed, suspend operation of the equipment and report the condition to the site supervisor immediately.

Emergency Switches	
Kill switches are located and accessible to workers on both sides of the rotating stem. NOTE: Location and number of switches depend on the rig manufacturer; please refer to owner's manual (DPT typically has one switch on control panel).	☐ Pass ☐ Fail ☐ N/A
Kill switches installed by the manufacturer are verified to be in operable condition and all workers are familiar with the location and operation of these switches. **NEVER BYPASS, DISABLE, OR REMOVE KILL DEVICES.**	☐ Pass ☐ Fail ☐ N/A
Protective Guards	
Drive shafts, belts, chain drives, and universal joints are guarded to prevent accidental insertion of hands, fingers, or tools.	☐ Pass ☐ Fail ☐ N/A
Cables	
Cables on drill rig are free of kinks, frayed wires, birdcages, flat spots, grease, and worn or missing sections.	☐ Pass ☐ Fail ☐ N/A
Cables are terminated at the working end with a proper eye splice; either swaged, coupled, or using cable clamps.	☐ Pass ☐ Fail ☐ N/A
Cable clamps are installed with the saddle on the live or load side. Clamps are not alternated and are of the correct size and number for the cable size.	☐ Pass ☐ Fail ☐ N/A
Wire ropes are not allowed to bend around sharp edges without cushion material.	☐ Pass ☐ Fail ☐ N/A
Pulleys	
Pulleys are not to be bent, cracked, or broken.	☐ Pass ☐ Fail ☐ N/A
Pulleys operate smoothly and freely, without resistance.	☐ Pass ☐ Fail ☐ N/A
Cable Winches	
Motor is mounted in correct location and tightly secured to drill rig.	☐ Pass ☐ Fail ☐ N/A
Winch is capable of being placed in the free spool (unwind smoothly) and locked position correctly, demonstrating that the cable is suitable for lifting during drilling operations.	☐ Pass ☐ Fail ☐ N/A
Safety Latches	
Hooks installed on hoist cables are the safety type with a functional latch to prevent accidental separation.	☐ Pass ☐ Fail ☐ N/A
Safety latches are functional and completely span the entire throat of the hook and have positive action to close the throat except when manually displaced for connecting or disconnecting a load.	☐ Pass ☐ Fail ☐ N/A
Flights/Augers	
Flights/Augers should not be bent, cracked, or broken. NOTE: Flights/Augers failing inspection must be removed from jobsite.	☐ Pass ☐ Fail ☐ N/A
Flights should be blunt to prevent the risks of cuts.	☐ Pass ☐ Fail ☐ N/A
Auger keys should not be bent, have any cracks/fractures, be excessively worn, or otherwise damaged.	☐ Pass ☐ Fail ☐ N/A
Auger bolt holes and threads should not be damaged.	☐ Pass ☐ Fail ☐ N/A

Inspect flights/augers for metal burns. NOTE: Burrs must be filed to flat surface.	☐ Pass ☐ Fail ☐ N/A
Avoid stacking augers; all should lay flat on ground.	☐ Pass ☐ Fail ☐ N/A
Avoid manually lifting/moving augers. Should be lifted/moved with cable lines, or, at a minimum, by two persons.	☐ Pass ☐ Fail ☐ N/A
Drill String	
Drill string should not be bent or have any cracks/fractures.	☐ Pass ☐ Fail ☐ N/A
Drill string connecting pins should not be bent, have any cracks/fractures, or be excessively worn.	☐ Pass ☐ Fail ☐ N/A
Mast	
Mast is free of bends, cracks, or broken sections.	☐ Pass ☐ Fail ☐ N/A
All mounting hardware (pins, bolts, etc) should be in place.	☐ Pass ☐ Fail ☐ N/A
No moving of drill rig while mast is in vertical position.	☐ Pass ☐ Fail ☐ N/A
Maintenance/repairs to be performed on mast only in horizontal position.	☐ Pass ☐ Fail ☐ N/A
Hammering Device	
Hammer free of cracks, fatigue, or other signs of excessive wear.	☐ Pass ☐ Fail ☐ N/A
Hammer connections are secure.	☐ Pass ☐ Fail ☐ N/A
Leveling Devices	
Outriggers move in/out and up/down smoothly and freely while using controls on drill rig, with no hydraulics leaks.	☐ Pass ☐ Fail ☐ N/A
Outriggers are extended prior to and whenever the mast is raised off its cradle. Outriggers must maintain pressure to continuously support and stabilize the drill rig (even while unattended).	☐ Pass ☐ Fail ☐ N/A
Outriggers are properly supported on the ground surface to prevent setting into the soil (use of outrigger support pads).	☐ Pass ☐ Fail ☐ N/A
Controls	
Controls are intact, properly labeled, have freedom of movement, and have no loose wiring or connections.	☐ Pass ☐ Fail ☐ N/A
Controls are not blocked or locked into an operating position.	☐ Pass ☐ Fail ☐ N/A
Installed lights, signals, gauges, and alarms operate properly.	☐ Pass ☐ Fail ☐ N/A
Lifting Devices	
Slings, chokers, and lifting devices are inspected before using and are in proper working order. NOTE: Damaged units are to be labeled and removed from jobsite.	☐ Pass ☐ Fail ☐ N/A
Shackles/Clevises are in proper working order with pins/screws in place that is to be used while lifting.	☐ Pass ☐ Fail ☐ N/A
Cables and lifting devices are not operated erratically or with a jerking action to overcome resistance.	☐ Pass ☐ Fail ☐ N/A
Hydraulic System	
Hydraulic lines are secure, in good condition with no signs of excessive wear, and not leaking. NOTE: Check while pressurized.	☐ Pass ☐ Fail ☐ N/A
Hydraulic lines are not in a bent or pinched position causing additional fluid restrictions/pressures.	☐ Pass ☐ Fail ☐ N/A
Hydraulic oil reservoir has appropriate amount of oil and not leaking.	☐ Pass ☐ Fail ☐ N/A
Documentation available to confirm that pressure relief valve was checked during shop maintenance activity and noted on maintenance log.	☐ Pass ☐ Fail ☐ N/A
Pump Lines (water, grout, etc)	
Suction/Discharge hoses, pipes, valves, and fittings are secured and not leaking.	☐ Pass ☐ Fail ☐ N/A
High pressure hoses have a safety chain, cable, or strap at each end to prevent whipping in the event of a failure.	☐ Pass ☐ Fail ☐ N/A
Fire Prevention	
A fire extinguisher of appropriate size is located on drill rig and readily available/accessible for drilling crew (recommended 20 lb).	☐ Pass ☐ Fail ☐ N/A

Ladders	
Drill rig has a permanently attached or proper portable ladder to be used for access to drilling platform.	☐ Pass ☐ Fail ☐ N/A
Tracks	
Tracks on rig are not excessively worn and free of any debris or foreign material.	☐ Pass ☐ Fail ☐ N/A
General	
Drill rig meets regulations for transport on state/federal highways (inspection sticker, license plate, etc.).	☐ Pass ☐ Fail ☐ N/A
Does the rig size meet job requirements?	☐ Pass ☐ Fail ☐ N/A
Maintenance log available for previous 3 months to confirm proper maintenance/inspection.	☐ Pass ☐ Fail ☐ N/A
Exhaust	
Exhaust system should be free from defect and routes engine exhaust away from drill rig workers.	☐ Pass ☐ Fail ☐ N/A
Fuels	
Fuel stored in an approved and properly labeled container.	☐ Pass ☐ Fail ☐ N/A
Fuel transfer lines free from signs of excessive wear and not leaking.	☐ Pass ☐ Fail ☐ N/A
Refueling and transferring of fuel is performed in an approved area with sufficient containment to prevent spillage.	☐ Pass ☐ Fail ☐ N/A
Exclusion/Work Zones	
The exclusion/work zone is centered over the borehole and the radius equal to or greater than the height of the mast (measured from ground level).	☐ Pass ☐ Fail ☐ N/A
The exclusion/work zone should be clear of tripping hazards.	☐ Pass ☐ Fail ☐ N/A
Overhead Obstructions	
Except where electrical distribution and transmission lines have been de-energized and visibly grounded, drill rigs will be operated proximate to under, by, or near power lines in accordance with the following: • 50 KV or less – minimum clearance of 10 feet (3 meters) • 50 KV or greater – add 0.4 inches for every KV over 50 KV • If voltage is unknown, maintain at least 20 feet (6.1 meters) of clearance	☐ Pass ☐ Fail ☐ N/A
Rig Repairs	
Repairs, when possible, are conducted offsite to reduce the risk of any onsite incidents.	☐ Pass ☐ Fail ☐ N/A
Specialized PPE	
When working at elevated heights, workers are to wear a fall restraining device attached in a manner to restrict falls to less than six feet (1.83 meters).	☐ Pass ☐ Fail ☐ N/A
When working in wet/slippery conditions, all workers have a lug-type sole or similar slip resistant sole, on their safety footwear to prevent slipping.	☐ Pass ☐ Fail ☐ N/A

Comments:

Signature of Inspector: _____ Date: _____

URS SAFETY MANAGEMENT STANDARD

Vehicle Safety Program

1. Applicability

This standard applies to the operations of URS Corporation and its subsidiary companies.

This standard applies to employees operating motor vehicles that are owned, rented or leased by the Company, and the use of personal or government supplied vehicles while on Company business.

This SMS does not apply to heavy equipment operations.

2. Purpose and Scope

This standard defines the policies that help URS minimize losses, injuries, and legal liabilities associated with improper vehicle use.

3. Procedures

The associated implementing procedures for this standard are included as attachments:

Infrastructure & Environment

SMS 057 NA – North America

SMS 057 INT – International Operations (including Europe, Asia, South America and Africa)

SMS AP7-057 – Australia / New Zealand

Energy & Construction

SMS 057 EC

Federal Services

SMS 057 FS

URS SAFETY MANAGEMENT STANDARD

Vehicle Safety Program

1. Applicability

This standard applies to the operations of Infrastructure & Environment business of URS Corporation and its subsidiary companies.

This standard applies to employees who operate motor vehicles that are owned, rented, or leased by URS and to employees who use personal, client or government-supplied vehicles while conducting URS business. This safety management standard (SMS) does not apply to heavy equipment operations (see SMS 019 – Heavy Equipment Operations).

2. Purpose and Scope

This standard defines the policies that help URS minimize losses, injuries, and legal liabilities associated with improper vehicle use. This policy also provides information for required training and makes all applicable employees aware of their respective duties and obligations when driving on URS business.

The standard applies to operations worldwide. For countries outside the United States, some terminology may need to be read in the context of local or national regulations.

3. Implementation

The overall responsibility for this standard implementation is with the URS Office Manager. Additional responsibilities are as follows:

Fleet Management	Participation in the Vehicle Safety Program, vehicle acquisition, insurance claims reporting, controlling access to vehicles, fueling and maintenance of vehicles, and participation in the incident review processes.
Human Resources	Documentation of driver's license upon hire, and participation in the incident review processes when necessary and any related performance management issues.
Health and Safety	Employee safety training, maintenance of the Vehicle Safety Program, and participation in the incident review processes.
Employee	Familiarization with URS Vehicle Safety Program and compliance with its requirements.

4. Requirements

A. Authorized Drivers

1. Authorized Drivers are those individuals permitted to drive URS-owned, -rented, or -leased vehicles, client vehicles, and employees driving a personal vehicle for work purposes.

2. The Authorized Driver must be at least 18 years of age (noncommercial license) or 21 years of age (commercial license) and have a current driver's license for the appropriate class of vehicle (unless more stringent requirements are established by the leasing/renting agency). Employees with conditional licenses are prohibited from operating vehicles on URS business.

3. Human Resources/Administration will conduct an authorized background check, which includes a driving record, and will obtain a copy of the state-issued driver's license for all Authorized Drivers during the new hire process. The employee will not be permitted to be an Authorized Driver if the background check indicates legal action involving alcohol or drug use (e.g. driving under the influence [DUI]), a driving without a license violation, or a hit-and-run/leaving the scene of an accident within the past two years.

   URS employees that are Authorized Drivers will produce their driver's license upon request at any time. Authorized drivers who lose their driver's license through legal action or are otherwise unauthorized to drive *must* notify their Human Resources Representative immediately. The Human Resources Representative will notify the Fleet Manager, Office Manager, and Health, Safety and Environment (HSE) Representative of this employee's loss of authorization to drive for URS.

4. Authorized drivers must:

   a. Review SMS 057 – Vehicle Safety Program.

   b. Report any conviction for driving under the influence of drugs or alcohol to the Human Resources Representative responsible for the employee's office or operation.

   c. Complete vehicle safety training, including the URS online training module and other sanctioned driving courses described in Section 4.B, Training.

d. Report all incidents in accordance with Section 4.E, Notifications.

e. Cooperate with any URS investigation concerning the incident.

f. Complete remedial driver safety training described in Section 4.B.3 as appropriate following an incident.

5. Non-URS employees (e.g., subcontractors, alliance partners) may operate URS-owned, -leased, or -rented vehicles or client vehicles only when this activity is specifically agreed to in the applicable contract and only within the parameters of the contract and project plans.

6. For URS operations or offices that plan vehicle use that requires compliance with Federal Motor Carrier Regulations, the affected manager directing operations at the facility or site must obtain approvals from the Vice President/Director HSE and the Fleet Manager. This requirement typically applies to vehicles with a gross vehicle weight over 10,000 pounds, vehicles carrying more than 15 passengers, or vehicles used for hazardous materials transport. The driver must have an appropriate commercial driver's license and may be subject to specific training and medical surveillance (see SMS 024 – Medical Screening and Surveillance).

7. Only Authorized Drivers can be reimbursed mileage for the use of their personal vehicle on URS business. Requests for reimbursements for mileage by nondesignated drivers may be denied.

B. Training

1. Within 1 month of their hire date, Authorized Drivers will complete basic driver safety training, including a review of the URS Vehicle Safety Program (SMS 057) and the 30-minute online Learning Management System (LMS) Vehicle Safety training module.

2. Authorized Drivers will complete the 4-hour web-based defensive driving training program provided through the National Safety Council (NSC). Other defensive driving training programs that are equivalent or exceed the NSC training (e.g., the Smith Driving System) may be substituted by approval of the Regional HSE

Manager. *All URS Authorized Drivers shall complete this web-based defensive driver training or equivalent.*

3. Additional training is required for employees who have been involved in multiple work-related, at-fault vehicle incidents where $2,000 in damages was sustained. This additional training will be determined by concurrent agreement from the URS Operating Unit Manager, the URS Fleet Manager, and the Vice President/Director HSE and may be in the form of a behind-the-wheel training equivalent to the Smith Driving System.

C. General Operating Policy and Procedure (Applies to Authorized Drivers and Passengers Operating Motor Vehicles on Official URS Business)

1. Only properly licensed employees who are specifically authorized to drive URS vehicles may operate motor vehicles owned, rented, or leased by URS.

2. **The use of cellular phones/devices, including cellular phones with hands-free devices, while driving is prohibited.** If you need to make a call on a cellular phone, pull over and park in a safe area. This prohibition includes text messaging and other wireless devices (e.g., Blackberries, iPhones).

3. Authorized drivers required to operate vehicles with special hazards (i.e., trucks carrying fuel cells, vehicles used to tow trailers, vehicles with limited visibility, etc.) will be thoroughly briefed on the hazards and control measures necessary for safe operation of the vehicle. The local URS operation will maintain documentation of the briefing.

4. Drivers/operators will know and obey all federal, state, and local motor vehicle laws applicable to the operation of their vehicle.

5. A driver will not permit unauthorized persons to operate a vehicle owned, rented, or leased by URS.

6. URS policy regarding reimbursement and insurance coverage requirements for use of personal automobiles may be found in the Policies and Procedures Manual (Section 074.020). Only Authorized Drivers may be reimbursed mileage for the use of a personal vehicle.

7. Personal vehicles driven by Authorized Drivers for business use must satisfy the state's registration and inspection requirements and may not be modified beyond manufacturer's specifications.

8. All cargo extending 4 feet or more beyond the end of a truck, trailer, or similar vehicle will be clearly marked with a red warning flag or cloth measuring no less than 16 inches square. Red lights must be used at night.

9. URS-owned, -rented, or -leased vehicles are for official business use only and are not to be used for personal activities. Exceptions to this requirement can be made only with the specific approval of a Business Manager, Senior Vice President, or the URS Fleet Manager.

10. Seat belts and shoulder harnesses (occupant restraint systems) will be worn or used whenever the vehicle is in operation. The vehicle may not move until all passengers have fastened their restraints. Vehicles are not to be operated or used by URS employees if seatbelts are not included as part of the vehicle's safety equipment.

11. When parking or leaving a vehicle, the following procedures must be followed: Shut off the engine, engage the transmission in park (automatic transmission) or first gear (standard transmission), set the parking brake, remove the ignition keys, and lock the vehicle.

12. The vehicle's engine is to be turned off during refueling. Smoking or cellular phone use is not allowed while refueling.

13. Drivers/operators will not drive or operate vehicles while under the influence of alcohol or illegal drugs. Additional details on the URS Substance Abuse Policy are available in the Policies and Procedures Manual (Section 034.030).

14. Drivers/operators will not drive or operate vehicles while under the influence of medications when told by a physician, another healthcare provider, or the manufacturer (i.e., instructions on the label) that the activity is unsafe.

15. Vehicle operators are responsible for any fines levied by law enforcement agencies for the operation of their vehicles.

16. Driver/operators may not deactivate or muffle any backup warning device.

17. Distractions while driving are a major cause of incidents. Distractions include the use of cellular phones (including texting), eating, drinking, smoking, and engaging in intense conversations. URS Authorized Drivers must exercise proper control of the vehicle at all times, including the management of possibly distracting actions and behaviors. If you have to eat, pull over and park. If you become engaged in an intense conversation to the point of distraction, pull over and park or end the conversation.

18. Fatigue is the result of physical or mental exertion that impairs performance. Driver fatigue may be due to lack of adequate sleep, extended work hours, strenuous work or non-work activities, or a combination of other factors. When drivers recognize the signals of drowsiness (e.g., frequent yawning, heavy eyes, or blurred vision) they will pull over in a safe location and rest. Refer to SMS 060 – Fatigue Management for additional information.

19. The use of motorcycles on URS business is prohibited.

20. The use of all-terrain vehicles is prohibited without the approval of a Division, Regional, or Business Unit HSE Manager or Director. All-terrain vehicle operators will be required to have the proper qualifications, training and personal protective equipment prior to operating the vehicle.

21. When practical, drivers should travel during daylight hours and avoid driving during adverse weather conditions. Drivers should also inform colleagues of their travel itinerary including destination and anticipated departure and arrival times.

22. When practical, alternatives to road travel should be evaluated including teleconferencing/video conferencing, the use of public transportation or carpooling.

D. Field/Site Vehicle Safety

1. Define specific vehicle travel routes and parking areas at field sites. Use fencing, cones, or other markings to define roads and parking. SMS 032 – Work Zone Traffic Control provides additional information.

2. If parking on the shoulder of an active road, park as far off the road as possible.

3. If work (e.g., surveying) is required alongside an active road, park the vehicle behind the area of work to provide a barrier against out-of-control vehicles.

4. URS will not transport DOT-placard quantities of hazardous materials. However, small quantities of hazardous materials (e.g., sample coolers) may be transported if properly packaged. Take precautions to prevent chemical contamination of the vehicle. Further details on DOT shipping may be found in SMS 048 – Hazardous Materials/Dangerous Goods Shipping.

5. Nuclear density meters (e.g., Troxler units) may be transported only by employees who have been trained in the use of nuclear density meters (see SMS 044 – Radiation Safety for Portable Gauges). Nuclear density meters must be secured from movement and locked during transport. Nuclear Regulatory Commission (NRC) and state-specific regulations regarding transport documentation also apply.

6. When performing fieldwork that requires the blocking of traffic lanes (e.g., bridge inspection), follow SMS 032, the Manual on Uniform Traffic Control Devices for Streets and Highways (American National Standards Institute D6.1), and local police requirements for barriers, cones, and flaggers.

7. No employee may ride in the bed of a pickup truck unless seating and restraints are provided for this specific use.

8. Articles (e.g., tools, equipment, stickers, and labels) placed in/on vehicles will not interfere with vision or the proper operation of the vehicle in any way. All items in the vehicle must be secured to prevent them from moving about or out of the vehicle during sudden stops or turning, potentially injuring vehicle occupants, the public or damaging equipment. Company equipment (e.g., tools) shall be removed from the vehicle when parking overnight, unless parked in a secure area.

9. Whenever practicable, backing of a vehicle should be prevented. Trucks or vehicles with obstructed rearview mirrors must observe the following procedures when backing up: Position an employee to act as a spotter at the rear of the vehicles, in the driver's line of sight, to ensure that the area behind the truck is clear. If no other employee is present, then the driver must step out of the vehicle

and check the area behind the vehicle before backing up. As an added precaution, avoid backing up whenever possible.

10. All uncontrolled intersections (no traffic lights or traffic signs) will be treated as a four-way stop. The driver will exercise extreme caution at uncontrolled intersections.

11. URS drivers carrying more than 15 passengers will perform route planning using Journey Management Plan – Attachment 057-2 NA. A Journey Management Plan is also recommended when employees travel to a new location or unfamiliar destination. Route planning will address hazards associated along the intended route, including lack of traffic controls, speed, and hazards associated with road conditions, weather, visibility, and other threats. Route planning will be verified by the Office or Site Manager and will be reviewed by affected employees.

12. On buses and vehicles capable of carrying more than 15 passengers, no passengers may ride in a seat in the driver's row, which would otherwise impede the driver's lateral visibility.

13. Drivers must identify a reliable method of communication (e.g., cell phones) in case of an emergency and vehicles should be equipped with a roadside emergency kit when practical.

E. Incident Response and Reporting

1. In case of injury, call or have someone else call 9-1-1 immediately for emergency assistance. If you are involved in an incident and are not injured, the following requirements apply:

    a. Protect the scene.

    b. Do not admit liability or place any blame for the incident.

    c. Provide only your name, address, driver's license number, and vehicle insurance information.

    d. Complete the Auto Claim Report – Attachment 057-1 NA and obtain the following information:

        i. Name(s), addresses, and telephone number(s) of the owner(s).

        ii. Name(s) of the driver and any occupants of other vehicle(s).

        iii. The owner's insurance company.

iv. Driver's license number.

v. Year, make, model, and license number of the vehicle(s).

vi. Name(s) and addresses of any witnesses.

e. DO NOT

- Make any admissions of guilt or culpability.
- Call the insurance company; the Fleet Manager's office will do this (unless the incident involves your personal vehicle).
- Give a statement to the press.
- Give a signed statement to the claims adjuster representing the other driver's insurance company.

Note: The Auto Claim Report for vehicles owned or leased by URS is located in the vehicle glove compartment. The driver must complete this form at the scene.

2. Notifications

All incidents with a URS-owned, -rented, or -leased vehicle, or client vehicle or with a personally owned vehicle used for business must be reported to the Office Manager within 24 hours of the incident or on the next business day.

Incidents involving URS-owned, -leased, client vehicles or personally owned vehicles used for company business The Auto Claim Report, Attachment 057-1 NA, must be completed and distributed as instructed on the form. In addition, incidents involving rental vehicles will be reported to the rental agency.

Additionally, for motor vehicle incidents involving injured parties, the Incident Report Form – Attachment 049-1 NA must be completed.

Traffic violations received while operating a URS-owned, -rented, or –leased vehicle, client vehicle or with a personally owned vehicle used for company business must be reported to your Office Manager within 24 hours of the violation or on the next business day.

F. Incident Review

1. A violation of this vehicle safety standard is subject to disciplinary action, including termination. The Fleet Manager will review all incidents involving URS-owned, -rented, or -leased vehicles.

2. URS may suspend the privilege to operate vehicles on URS business because of noncompliance with the URS Vehicle Safety Program, involvement in a motor vehicle incident, or resulting citations or other legal actions associated with motor vehicle violations. Personnel authorized to suspend an employee's status as an Authorized Driver include the following:

    a. A Project Manager with responsibility for dedicated vehicles on a site. The suspension is applicable to those site vehicles only.

    b. A URS Operations Manager responsible for the employee.

    c. The URS Fleet Manager.

    d. The Vice President/Director HSE.

3. The employee's driving privileges *will be* suspended for any of the following:

    a. Accidents or legal action involving alcohol or drug use (e.g., driving under the influence [DUI]).

    b. Driving without a license.

    c. Hit-and-run driving or leaving the scene of an accident.

    d. Unauthorized use of URS vehicles (i.e., using a URS vehicle for moving personal items, carrying passengers who are not associated with work activities, etc.).

4. The employee's driving privileges *may be* suspended for any of the following:

    a. Two or more at-fault accidents involving the same Authorized Driver within a 12-month period.

    b. Multiple complaints from other employees or members of the public about driving performance.

c. Any accident caused by a URS Authorized Driver where damages exceed $2,000.

d. Failure to comply with the cellular phone use policy.

e. Gross misconduct or violation of policy.

5. An Authorized Driver's driving privileges may be reinstated as follows:

   a. For any suspension resulting from law enforcement agency legal action involving drugs and alcohol on the part of the former Authorized Driver, driving privileges may be reinstated only by concurrent agreement from the URS Operating Unit Manager, the URS Fleet Manager, the Vice President/Director HSE, and the appropriate Human Resources Regional Manager.

   b. For those Authorized Driver's privilege suspensions that are not related to driving under the influence of drugs or alcohol, privileges may be reinstated with concurrent agreement by the URS Operating Unit Manager, the Vice President/Director HSE, and appropriate Human Resources Regional Manager upon completion of required remedial training (see Section 4.B.3).

6. Disciplinary action may include the following:

   a. Loss of URS driving privileges.

   b. Additional driver safety training. Refer to Section 4.B, Training.

   c. Disciplinary warning.

   d. Termination.

G. Inspection

1. The driver is responsible for inspecting the vehicle prior to use and not driving a vehicle with obvious safety defects. Attachment 057-3 NA may be used to document the inspection.

2. Basic safety checks must include the following:

a. Tire condition/pressure.

b. Lights/turn signals.

c. A clean windshield and adequate window washer fluid.

d. Gauges/warning lights indicating a normal condition.

e. Mirrors properly adjusted.

f. Brakes with adequate pedal pressure for proper braking.

Any defects must be reported to the local office Fleet Representative or Office Administrator.

H. Vehicle Maintenance

1. The Office Administrator (or designee) is to ensure that all vehicles owned or leased by URS are properly maintained.

2. Routine maintenance must be performed in accordance with the schedule provided in the owner's manual stored in the vehicle.

3. Reported defects/problems with vehicles must be repaired promptly.

5. Documentation Summary

The following documentation will be maintained in the office/project file:

A. Auto Claim Reports

B. Journey Management Plans

C. Vehicle Inspections

6. Resources

A. National Safety Council, Information on Defensive Driving Courses
http://www.nscddconline.com/

B. AAA Foundation for Traffic Safety
http://www.aaafts.org/

C. Smith Driving System
http://smith-system.com/

D. American National Standards Institute (ANSI) D6.1 – Manual on Uniform Traffic Control Devices for Streets and Highways

E. SMS 019 – Heavy Equipment Operations

F. SMS 024 – Medical Screening and Surveillance

G. SMS 032 – Work Zone Traffic Control

H. SMS 044 – Radiation Safety for Portable Gauges

I. SMS 048 – Hazardous Materials/Dangerous Goods Shipping

J. SMS 049 – Injury/Illness/Incident Reporting and Notifications

K. SMS 060 – Fatigue Management

L. Attachment 057-1 NA – Auto Claim Report

M. Attachment 057-2 NA – Journey Management Plan

N. Attachment 057-3 NA – Vehicle Inspection Checklist

URS	Health, Safety and Environment **AUTO CLAIM REPORT**	Attachment 057-1 NA Issue Date: February 2001 Revision 11: September 2012

To be used for **all** vehicle accidents involving URS-leased/owned, client, and rental vehicles and for personal vehicles used on company business.

Name of Employee Involved in Accident _____

Was the employee injured? Yes ☐ No ☐ If Yes, complete SMS 049-1NA.

Was anyone else injured? Yes ☐ No ☐ **Details:** _____

Office Location _____ **Date of Accident** _____

Employee Phone/Cell # _____ **Office Phone #** _____

Describe Injury (including medical treatment, if any):

Company Vehicle[1] ☐
Personal Vehicle[1] ☐
Rental Vehicle[2] ☐
Government or Client Vehicle ☐

On Company business at the time of accident? Yes ☐ No ☐
Was alcohol or drugs involved at the time of accident? Yes ☐ No ☐
Vehicle Identification Number (company or personal):
_____

Year _____ Make _____ Model _____

Other Driver's Information

Name _____ Phone Number _____

Address _____

Insurance Co. _____ Policy # _____

License Plate # _____ Make _____ Model _____

Description of Accident

Time of Accident _____ Police Report # _____

Location of Accident _____ Police Department _____

At any time, were police or authorities called or present? Yes ☐ No ☐

Description (provide a clear, inclusive description of the accident):

_____

_____

_____

_____

Distribution: ☐ Office/Site Manager ☐ Regional HSE Manager ☐ Office/Site HSE Representative

[1] **All accidents occurring in the US to company, client or personal vehicles will be reported to:**
PHH
Phone 800 446 7052 Fax 410 771 2619

[2] **All accidents occurring in rental vehicles will also be reported to the rental agency. All accidents occurring outside the US will be reported to the Regional HSE Manager.**

URS	Health, Safety and Environment **AUTO CLAIM REPORT**	Attachment 057-1 NA Issue Date: February 2001 Revision 11: September 2012

To be used for **all** vehicle accidents involving URS-leased/owned, client, and rental vehicles and for personal vehicles used on company business.

Draw a diagram showing the position of vehicles before and after the accident. Correct the diagram to fit your situation. Attach police report if available.

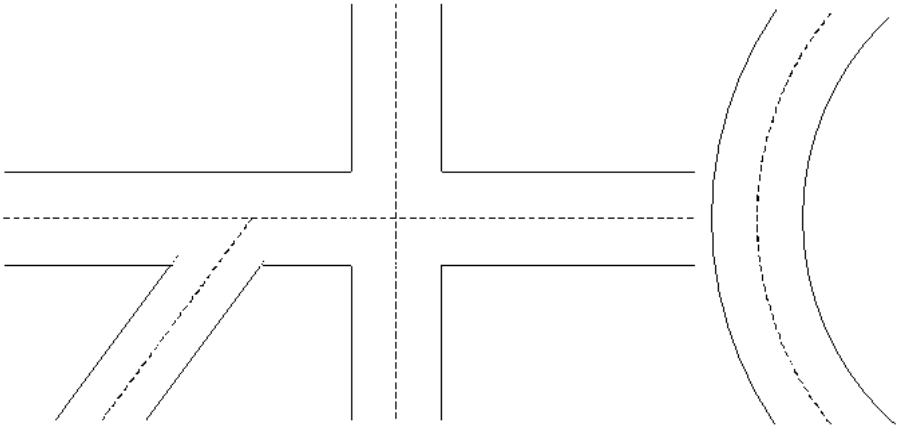

Check all applicable conditions on each subject

WEATHER
- ☐ Clear
- ☐ Cloudy
- ☐ Fog
- ☐ Rain
- ☐ Snow
- ☐ Sleet
- ☐ Other

LIGHTING
- ☐ Daylight ☐ Dark
- ☐ Dusk ☐ Dawn
- ☐ Dark - no street lights on
- ☐ Dark - street lights on
- ☐ Headlights
- ☐ Headlights on dim
- ☐ Headlights on bright
- ☐ No lights on

ROAD SURFACE
- ☐ Dry
- ☐ Wet
- ☐ Muddy
- ☐ Snowy
- ☐ Snow-covered
- ☐ Ice in places
- ☐ Ice -covered
- ☐ Other

ROAD DESCRIPTION
- ☐ Straight ☐ Curve
- ☐ Level
- ☐ Hill ☐ Up ☐ Down
- ☐ Paved ☐ Black top
- ☐ One-way
- ☐ Two-way
- ☐ Divided road
- ☐ Intersection

ACTION OF DRIVER	You	Other
Exceeding safe speed	☐	☐
On wrong side of street	☐	☐
Did not have right-of-way	☐	☐
Disobeyed traffic signal	☐	☐
Passed illegally	☐	☐
Improper turning	☐	☐
Improper backing	☐	☐
Following too closely	☐	☐
Failure to signal	☐	☐
Improper lane change	☐	☐
Misjudged clearance	☐	☐
Other	☐	☐

What was speed limit?

_____ MPH

Witnesses?

☐ Yes ☐ No

Traffic control
- ☐ Signal lights
- ☐ Caution lights
- ☐ Stop sign
- ☐ Police officer
- ☐ None ☐ Other

Witness Name _____

Address _____

_____

Name _____

Address _____

_____

I understand that any misrepresentation or material omission made by me on this Auto Claim Report will be sufficient cause for immediate termination of employment whenever it may be discovered. I represent and warrant that I have read and fully understand the foregoing, that all information I have provided on this Report is true and accurate.

Signature		Date	

URS	Health, Safety and Environment **JOURNEY MANAGEMENT PLAN**	Attachment 057-2 NA Issue Date: February 2001 Revision 11: September 2012

Commencement Point	Destination Point

Issue #: 1 Date:

ROUTE DIRECTIONS	PERSONAL PROTECTIVE EQUIPMENT
TIME AND DISTANCE, ROUND TRIP	SPECIAL INSTRUCTIONS 1. Do not use cell phone or two-way communication devices while driving. 2. Use three points of contact when entering/exiting the cab. 3. Everyone has the authority and responsibility to stop work if conditions are unsafe. 4. Do not drive while under the influence of medication, drugs or alcohol. 5. Do not drive when you are fatigued.
SITE HAZARDS	
ROUTE HAZARDS	EMERGENCY INFORMATION
DESTINATION ENTRY INSTRUCTIONS	EMERGENCY CONTACT NUMBERS Fire/Ambulance/Police:
DESTINATION HAZARDS	SITE CONTACT NUMBERS Site Manager:
	Safety Manager:
DESTINATION EXIT INSTRUCTIONS	CURRENT TRIP INFORMATION UPDATE
RETURN JOURNEY	

ROUTE MAP

URS	Health, Safety and Environment **VEHICLE INSPECTION CHECKLIST**	Attachment 057-3 NA Issue Date: June 1999 Revision 11: September 2012

Make/Model/Plate #: _____ Inspector's Name: _____

Mileage: _____ Date: _____

ITEM INSPECTED	CHECK IF SATISFACTORY	COMMENTS
Vehicle Registration	☐	
Insurance Information	☐	
Tires (Tread Depth, Inflation)	☐	
Spare Tire	☐	
Shocks	☐	
Exhaust System	☐	
Engine	☐	
Steering	☐	
Horn	☐	
Mirrors	☐	
First Aid Kit	☐	
Fire Extinguisher	☐	
Brakes	☐	
Parking Brake	☐	
Windshield Wipers	☐	
Windshield	☐	
Washers	☐	
Headlights (High, Low)	☐	
Turn Signals	☐	
Brake Lights	☐	
Back-up Lights	☐	
Instrument Lights	☐	
Tail Lights	☐	
Body Condition	☐	
Back-up Alarm	☐	
Ice Scraper	☐	
Spare Tire	☐	
Clutch	☐	
Safety Restraints	☐	
Fluids	☐	
Engine Oil	☐	
Brake Fluid	☐	
Transmission Fluid	☐	
Engine Coolant	☐	
Washer Fluid	☐	
Power Steering Fluid	☐	

URS SAFETY MANAGEMENT STANDARD

Cold Stress

1. Applicability

This standard applies to the operations of URS Corporation and its subsidiary companies.

2. Purpose and Scope

The purpose of this standard is to protect project personnel from hypothermia and frostbite when working outdoors in damp and cool (below 50° F or 10°C) conditions or anytime temperatures are below 32°F or 0°C.

3. Procedures

The associated implementing regional procedures for this standard are included as attachments:

SMS 059 NA – North America

SMS 059 INT – International Operations (including Europe, Asia, South America and Africa)

SMS AP7-059 – Australia / New Zealand

URS SAFETY MANAGEMENT STANDARD

Cold Stress

1. Applicability

This standard applies to URS Corporation and its subsidiary companies where field crews are working outdoors in damp and cool (below 50 degrees Fahrenheit [°F] or 10 degrees Celsius [°C]) conditions or anytime temperatures are below 32°F or 0°C.

2. Purpose and Scope

The purpose of this standard is to protect project personnel from hypothermia and frostbite.

3. Implementation

Implementation of this standard is the responsibility of the URS manager directing activities of the facility, site, or project location.

4. Requirements

A. Carefully plan work anticipated to be performed in cool or cold conditions. Include costs in project budgets for specialized equipment and supplies needed to complete the field activities.

B. Monitor weather forecasts immediately prior to entering the field. If possible, schedule heavy work during the warmer parts of the day. Implement a work-warming regimen by taking breaks out of the cold.

C. Observe and monitor weather conditions such as ambient temperature, wind speed, and precipitation while in the field. If needed, use Supplemental Information B to determine wind chill.

D. Wearing the right clothing is the most important way to avoid cold stress. The type of fabric also makes a difference. Cotton loses its insulation value when it becomes wet. Wool, on the other hand, retains its insulation even when wet. Adequate insulating dry clothing will be required in air or wind chill temperatures below 40 °F (4.4 °C).

1. Wear at least 3 layers of clothing to help prevent cold stress. It is important to preserve the air space between the body and the outer layer of clothing to retain body heat.

2. Wear an outer layer to break the wind and allow some ventilation (e.g., Gortex® or nylon).

3. Wear a middle layer of down, wool, or similar materials to provide insulation.

4. Wear an inner layer of cotton or synthetic weave to allow ventilation.

5. Wear a hat or hardhat liner. Up to 40 percent of body heat can be lost when the head is left exposed.

6. Wear insulated boots or other insulated footwear, and insulated gloves to help reduce the chance of frostbite.

7. Keep a change of dry clothing available in case work clothes become wet.

8. Do not wear tight clothing. Loose clothing allows better ventilation.

9. Skin should not be left exposed on a continuous basis when air temperature or chill factors are below -17°F (-27°C).

10. Drink plenty of liquids, avoiding caffeine and alcohol, which are vasoconstrictors. It is easy to become dehydrated in cold weather.

E. Use the following work practices:

1. Use Supplemental Information C to establish work/rest cycles in cold weather.

2. Drink plenty of warm liquids. It is easy to become dehydrated in cold weather.

3. Avoiding caffeine and alcohol. Alcohol will accelerate loss of body heat.

4. Eat high calorie snacks to help maintain body metabolism.

5. If possible, heavy work should be scheduled during the warmer parts of the day. Take breaks out of the cold.

6. Work in pairs to keep an eye on each other and watch for signs of cold stress.

7. NEVER IGNORE SHIVERING. Persistent or violent shivering is a clear warning that you are on the verge of hypothermia.

8. Avoid exhaustion.

F. When possible, use the following engineering controls:

   1. Provide shelter to escape cold, wind, and precipitation

   2. Provide a source of heat (such as warm packs or portable heaters).

   3. Use insulating materials on equipment handles when temperatures drop below 30°F (-1°C).

G. Watch for symptoms and signs of hypothermia. Work in pairs to keep an eye on each other and watch for signs of cold stress.

H. Treat cold stress illness as follows:

   1. Hypothermia: Prompt treatment of hypothermia is essential. Once the body temperature drops below 95°F (35°C), the loss of temperature control occurs, and the body can no longer rewarm itself. Initial treatment includes reducing heat loss by moving the individual out of the wind and cold, removing wet clothing, applying external heat (such as a pre-warmed sleeping bag, electric blanket, or body-heat from other workers), and obtaining follow-up medical attention.

   2. Frost Bite: The initial treatment for frostbite includes bringing the individual to a warm location, removing clothing in the affected area, and, **if help is delayed**, placing the affected parts in warm (100° to104°F or 38° to 40°C) water. Do not massage or rub the frostbite area. After the initial treatment, wrap the affected area loosely in sterile gauze and seek medical attention.

   For further discussion on Cold Stress treatment, please refer to Supplemental Information A.

I. Hypothermia in Water:

   Loss of body heat to the water is a major cause of deaths in boating and working near water incidents. Often the cause of death is listed as drowning; however, the primary cause is often hypothermia. It should also be noted that alcohol lowers the body temperature around 2 to 3 degrees by dilating the blood vessels. Do not drink alcohol around cold water. The following table shows the effects of hypothermia in water:

WATER TEMPERATURE	EXHAUSTION	SURVIVAL TIME
32.5°F (0°C)	Under 15 minutes	Under 15 to 45 minutes
32.5 to 40°F (0 to 4°C)	15 to 30 minutes	30 to 90 minutes
40 to 50°F (4 to 10°C)	30 to 60 minutes	1 to 3 hours
50 to 60°F (10 to 16°C)	1 to 2 hours	1 to 6 hours
60 to 70°F (16 to 21°C)	2 to 7 hours	2 to 40 hours
60 to 70°F (16 to 21°C)	3 to 12 hours	3 hours to indefinite
Over 80°F (27°C)	Indefinite	Indefinite

SOME POINTS TO REMEMBER:

1. Wear your PFD. Review SMS 027 – Work Over Water, SMS 053 – Marine Safety and Boat Operations and SMS 095 – Barge Operations.

2. If the water is less than 50°F (10°C), wear a wet suit or dry suit for work in water (e.g., wading), or if a significant potential to fall in water exists.

3. While in the water, do not attempt to swim unless to reach nearby safety. Unnecessary swimming increases the rate of body heat loss. Keep your head out of the water. This will increase your survival time.

4. Keep a positive attitude about your rescue. This will increase your chances of survival.

5. If there is more than one person in the water, huddling is recommended.

J. Training

Workers at risk of developing hypothermia or cold-related injury will be trained in:

1. Recognition of the signs and symptoms of cold injury or impending hypothermia;

2. Proper re-warming procedures and appropriate first aid treatment;
3. Proper use of clothing;
4. Proper eating and drinking practices; and
5. Safe work practices appropriate to the work that is to be performed.

5. Documentation Summary

The following documentation will be maintained in the project file:

A. Cold stress training records.

6. Resources

A. U.S. Occupational Safety and Health Administration (OSHA) Fact Sheets – "Protecting Workers in Cold Environments"

B. OSHA Publication 3156 – Quick Reference Card

C. SMS 027 – Work Over Water

D. SMS 053 – Marine Safety and Boat Operations

E. SMS 095 – Barge Operations

7. Supplemental Information

A. Signs of, and Treatment for, Cold Stress-Related Illnesses

B. Wind Chill Index (units in °F and miles/hour, and units in °C and Kilometers/hour)

C. Work/Warm-up Schedule for Outside Workers based on a Four-Hour Shift

Hypothermia: Hypothermia results when the body loses heat faster than it can be produced. When this situation first occurs, blood vessels in the skin constrict in an attempt to conserve vital internal heat. Hands and feet are first affected. If the body continues to lose heat, involuntary shivers begin. This is the body's way of attempting to produce more heat, and it is usually the first real warning sign of hypothermia. Further heat loss produces speech difficulty, confusion, loss of manual dexterity, collapse, and finally death. Wet clothes or immersion in cold water greatly increases the hypothermia risk. The progressive clinical presentation of hypothermia is described in the table below.

Frostbite: Local injury resulting from cold is included in the generic term frostbite. There are several degrees of damage. Frostbite can be categorized into:

- **Frost Nip or Initial Frostbite:** (1st degree frostbite) Characterized by blanching or whitening of skin.
- **Superficial Frostbite:** (2nd degree frostbite) Skin has a waxy or white appearance and is firm to the touch, but tissue beneath is resilient. Blistering and peeling of the frozen skin will follow exposure.
- **Deep Frostbite:** (3rd degree frostbite) Tissues are cold, pale, and solid; extremely serious injury with possible amputation of affected area.

Frostbite can occur without hypothermia when the extremities do not receive sufficient heat. The toes, fingers, cheeks, and ears are the most commonly affected. Frostbite occurs when there is freezing of the fluids around the cells of the affected tissues. The first symptom of frostbite is an uncomfortable sensation of coldness, followed by numbness. There may be tingling, stinging, or cramping. Contact by the skin with tools or other metal objects below 20°F (-7°C) may result in contact frostbite.

Condition	Core Body Temperature	Signs/Symptoms	Treatment
Mild Hypothermia	99 - 97 F 37 – 36 C	Normal, shivering may begin	Seek dry shelter; replace wet clothing, insulate whole body and head, avoid sweating, use external warmth (bath, fire) only if core above 95 degrees F, give warm sweet drinks and food.
	97 - 95 F 36 – 35 C	Cold sensation, goose bumps, unable to perform complex tasks with hands, shiver can be mild to severe, hands numb.	
Moderate Hypothermia	95 - 93 F 35 – 34 C	Intense shivering, muscle in-coordination becomes apparent, movements slow and labored, stumbling pace, mild confusion may appear alert.	Avoid exercise and external warmth, gently rest; give warm sweet drinks and calories, internal warming via warm moist air, monitor pulse and breathing.
	93 - 90 F 34 – 32 C	Violent shivering persist, difficulty speaking, sluggish thinking, amnesia starts to appear, gross muscle movements sluggish, unable to use hands, stumbles frequently, signs of depression, withdrawn.	
Severe Hypothermia	90 – 86 F 32 – 30 C	Shivering stops, exposed skin blue or puffy, muscle coordination very poor, inability to walk, confusion, incoherent/irrational behavior, but may be able to maintain posture and appearance of awareness.	Medical emergency, give nothing by mouth, wrap in an insulated blanket, avoid rapid rewarming, transfer to hospital immediately.
	86 – 82 F 30 – 28 C	Muscle rigidity, semiconscious, stupor, loss of awareness of others, pulse and respiration rate decrease, possible heart fibrillation.	
	82 – 78 F 28 – 25.5 C	Unconscious, heart beat and respiration erratic, pulse may not be palpable.	
	78 - 75 F 25.5 – 24 C	Pulmonary edema, cardiac and respiratory failure, death. Death may occur before this temperature is reached.	

Source: University Interscholastic League

Estimated wind speed	Actual temperature reading (°F/°C)											
	50/10	40/4	30/-1	20/-7	10/-12	0/-18	-10/-23	-20/-29	-30/-34	-40/-40	-50/-46	-60/-51
(mph/kph)	Equivalent wind chill temperature (°F/°C)											
0 (Calm)	50/10	40/4	30/-1	20/-7	10/-12	0/-18	-10/-23	-20/-29	-30/-34	-40/-40	-50/-46	-60/-51
5/8	48/9	37/3	27/-3	16/-9	6/-14	-5/-21	-15/-26	-26/-32	-36/-38	-47/-44	-57/-49	-68/-56
10/16	40/4	28/-2	16/-9	4/-16	-9/-23	-24/-31	-33/-36	-46/-43	-58/-50	-70/-57	-83/-64	-95/-71
15/24	36/2	22/-6	9/-13	-5/-21	-18/-28	-32/-36	-45/-43	-58/-50	-72/-58	-85/-65	-99-73	-112/-80
20/32	32/0	18/-8	4/-16	-10/-23	-25/-32	-39/-39	-53/-47	-67/-55	-82/-63	-96/-71	-110/-79	-121/-85
25/40	30/-1	16/-9	0/-18	-15/-26	-29/-34	-44/-42	-59/-51	-74/-59	-88/-67	-104/-76	-118/-83	-133/-92
30/48	28/-2	13/-11	-2/-19	-18/-28	-33/-36	-48/-44	-63/-53	-79/-62	-94/-70	-109/-78	-125/-87	-140/-96
35/56	27/-3	11/-12	-4/-20	-20/-29	-35/-37	-51/-46	-67/-55	-82/-63	-98/-72	-113/-81	-129/-89	-145/-98
40/64	26/-3	10/-12	-6/-21	-21/-29	-37/-38	-53/-47	-69/-56	-85/-65	-100/-73	-116/-82	-132/-91	-148/-100
	LOW HAZARD Risk of exposed, dry skin being affected in less than one hour. Awareness of hazard low.				**INCREASING HAZARD** Danger from freezing of exposed flesh within one minute.			**HIGH HAZARD** Flesh may freeze within 30seconds.				

Note that wind speeds greater than 40 mph/64 kph have little additional effect.

Information in this table was originally developed by the U.S. Army Research Institute of Environmental Medicine, Natick, MA, and is further adapted from the 2004 *Threshold Limit Values for Chemical Substances and Physical Agents and Biological Exposure Indices,* published by the ACGIH. The ACGIH publication provides the equivalent table with temperature in degrees Fahrenheit and wind speed in mph.

Equivalent wind chill temperatures identified require dry clothing to maintain core body temperature above 96.8°F (36°C).

How fast a person's body cools in cold weather depends on: air temperature, wind speed, heat of the sun, and work being done. The fingers and toes usually feel cold first. Shivering then sets in. Shivering is the body's way of warning that it needs to be warm-up. I

The Work Warm-Up Schedule shows the warm-up breaks needed for work in cold conditions. It assumes that normal work practice provides for breaks in warm locations every two hours. The schedule provides for additional breaks as the wind velocity at the work site increases and/or the temperature drops. Warm-up breaks should begin when the temperature reaches -15º (-26º C) with winds of 10 mph (16 km/h) or greater. When the work involves riding on an unshielded vehicle or some other activity that generates wind, the number of breaks should be increases appropriately. If effective protection against the wind can be provided by shields or screens, work modifications or measures, then the work warm-up schedule for "No Noticeable Wind" would apply.

The information below applies to any four-hour period. Warm-up breaks are assumed to provide 10 minutes in a warm environment. These guidelines apply to workers wearing dry clothing.

Air Temperature - Sunny Sky		**No Noticeable Wind**		**5 mph Wind**		**10 mph Wind**		**15 mph Wind**		**20 mph Wind**	
°C (approx.)	°F (approx.)	Max. work Period	No. of Breaks**	Max. Work Period	No. of Breaks	Max. Work Period	No. of Breaks	Max. Work Period	No. of Breaks	Max. Work Period	No. of Breaks
-26° to -28°	-15° to -19°	(Norm breaks) 1		(Norm breaks) 1		75 min.	2	55 min.	3	40 min.	4
-29°to -31°	-20°to -24°	(Norm breaks) 1		75 min.	2	55 min.	3	40 min.	4	30 min.	5
-32° to -34°	-25°to -29°	75 min.	2	55 min.	3	40 min.	4	30 min.	5	Non-emergency work should cease	
-35° to -37°	-30° to -34°	55 min.	3	40 min.	4	30 min.	5	Non-emergency work should cease			
-38° to -39°	-35° to -39°	40 min.	4	30 min.	5	Non-emergency work should cease					
-40° to -42°	-40°to -44°	30 min.	5	Non-emergency work should cease							
-43° & below	-45° & below	Non-emergency work should cease									

Note: All temperatures are approximate.

Apply the schedule one step lower for work with limited physical activity. For example, at -30º F (-35º C) with no noticeable wind, a worker with a job requiring little physical movement should have a maximum work period of 40 minutes with four breaks in a four-hour period.

If reliable weather reports are not available, us the following as a guide to estimate wind velocity:

- A 5 mph (8 km/h) wind will move a light flag
- A 10 mph (16 km/h) wind will fully extend the flag
- A 15 mph (24 km/h)wind will raise a newspaper sheet
- A 20 mph (23 km/h) wind will produce blowing and drifting snow.

Source: Saskatchewan Labour Occupational Health and Safety, January 2000.

URS SAFETY MANAGEMENT STANDARD

Incident Investigation

1. Applicability

This standard applies to the operations of URS Corporation and its subsidiary companies

2. Purpose and Scope

The purpose of this standard is to provide guidance for the investigation of work–related injuries, illness, and incidents.

3. Procedures

The associated procedures for this standard are included as attachments:

SMS 049 NA – North America

SMS 066 INT – International Operations (including Europe, Asia, South America and Africa)

SMS AP11-066 – Australia / New Zealand

URS SAFETY MANAGEMENT STANDARD

Manual Material Handling

1. Applicability

This standard applies to the operations of URS Corporation and its subsidiary companies.

2. Purpose and Scope

The purpose of this standard is to prevent common injuries caused by the practice of manual materials handling (MMH). For this procedure, MMH is defined as the movement of items by lifting, lowering, pushing, pulling, carrying, holding, or restraining.

3. Procedures

The associated implementing regional procedures for this standard are included as attachments:

SMS 069 NA – North America

SMS 069 INT – International Operations (including Europe, Asia, South America and Africa)

SMS AP7-069 – Australia / New Zealand

URS SAFETY MANAGEMENT STANDARD

Manual Material Handling

1. Applicability

This standard applies to URS Corporation and its subsidiary companies where personnel perform manual handling of materials. For this procedure, manual material handling (MMH) is defined as the movement of items by lifting, lowering, pushing, pulling, carrying, holding, or restraining.

2. Purpose and Scope

The purpose of this standard is to prevent common injuries caused by the practice of MMH. Immediate or short-term effects include lacerations, bruises, and muscle fatigue. Long-term effects include chronic pain, frequently in the lower back but also in limb joints and ligaments.

3. Implementation

Implementation of this standard is the responsibility of the URS manager directing activities of the facility, site, or project.

4. Requirements

A. General

1. Prior to lifting, lowering, pushing, pulling, carrying, holding, or restraining an object of any significant size or weight, employees must evaluate the object and the required task to determine whether they can handle the object safely.
2. If the employee has any doubt about whether he or she can safely move the object alone, the employee should obtain additional manual or mechanical help.
3. Healthy employees with no physician-imposed restrictions should be able to lift and carry a maximum of 50 pounds (23 kilograms) using proper lifting and carrying techniques. Physical and workplace factors may reduce this recommended weight limit (RWL) significantly and should be considered prior to attempting lifts of this magnitude. Examples of physical and workplace factors may include the following:
    a. Physical size of an object.
    b. Slippery container surface or poor grip ability.
    c. Sharp edges.
    d. Slippery floors or obstacles on the floor.
    e. Cold or hot objects surfaces.
    f. Distance and route of travel.

4. An employee's personal "safe" MMH capability is defined as the employee's personal capability to manually lift, carry, push, or pull an object alone. This "safe" limit must consider the employee's past experience and training with MMH, health status, and any other personal or environmental characteristics affecting the employee's ability to perform these tasks. An employee's "safe" MMH capability is typically at or below the calculated RWL. In some cases, a trained and physically conditioned employee may exceed the MMH capability limit, but only after a complete hazard review of the task has determined an acceptable risk for minimizing injury.
5. An MMH task that exceeds an employee's personal "safe" MMH capability or RWL should be brought to the attention of the applicable manager or safety supervisor for the project.
6. If, due to a medical or health condition, the employee's physician or the employee has set a personal "safe" MMH capability, then appropriate medical documentation must be provided to the applicable manager to define these limits. The manager and appropriate safety supervisor should evaluate the tasks to which that employee is assigned and recommend a specific course of action to limit the potential for injury. This should include periodic monitoring of the employee and his/her work environment.
7. A recommended RWL can be calculated using the factors described in Supplemental Information A. The weight limit derived from these calculations is considered to be a load that over 99% of men and over 75% of women can safely handle without application of engineering or administrative controls. **Implementation of the calculations in Supplemental Information A should be attempted only with the assistance of a safety professional knowledgeable in the application of these factors. The calculations are intended to determine RWLs for repetitive lifting scenarios rather than occasional lifts.**
8. Prior to any manual lift, it is suggested that the employee warm up his or her muscles and joints using a combination of stretching and flexing.

B. Preplanning

1. Where MMH will be a necessary function of the task, the manager and/or safety supervisor should perform a thorough evaluation of the activities to determine ergonomic solutions to reduce or eliminate conditions that can cause or contribute to MMH injuries.

2. If a heavy object is to be moved to another location, the safest transport route should be determined prior to the activity.
3. The area around the object and the route over which it will be transported should be checked for slip, trip, and fall hazards. Hazards should be removed prior to initiation of the task.
4. The object to be moved should be inspected for grasping or handling hazards, such as slivers, sharp edges, grease, water, etc. Eliminate or abate any identified hazards where possible. Safe grasping or handling points on the object should be determined. Whenever possible, containers with carrying handles should be used for objects because they increase the manual grip strength for holding the object, thus providing better control and reduced muscle fatigue.
5. The distance to be traveled and the length of time that a grip on the object must be maintained should be considered before moving objects. If the travel distance is greater than 10 feet (3 meters) at maximum RWL, the employee should consider using an alternative method, rather than manually carrying the object.

C. Lifting/Lowering Guidelines

1. Reduce or eliminate manual lifting and lowering tasks where possible. Determine whether there are ways to abate the safety and ergonomic hazards associated with manual lifting.
2. The recommended technique for two-handed manual lifting/lowering involves five maneuvers:
    a. Get a firm footing. Keep your feet apart for a stable base. Put one foot slightly in front of the other.
    b. Bend your knees. Do not bend at the waist. When grasping the object, a firm grip should be obtained before lifting/lowering.
    c. Lift/lower with your legs. Lift/lower the load slowly and in a straight line, avoiding sudden movements.
    d. Keep the load close to the body. Generally, the closer the load is to the body, the less force it exerts on your back.
    e. Keep your back straight, your head and shoulders up, and your stomach muscles tights. Do not add the weight of your body to the load. Avoid twisting.

3. When a turn or change of direction is necessary, the object should be lifted or lowered into a carrying position, then the whole body should be turned with the feet, avoiding any trunk twisting motion.
4. Objects to be lifted to shoulder height should first be lifted to waist height, then rested on a level surface so the grasping position can be changed prior to lifting to a higher level.
5. Employees should never lift a load above their head.

D. Carrying/Holding Guidelines

1. Manual carrying is an inefficient way of transporting materials in the work place. Where possible, reduce or eliminate manual carrying tasks.
2. Never carry a load above the head.
3. Carry an object close to the body using both hands. One-handed carries are awkward and tend to unbalance the employee.
4. Do not carry objects that are so large they will obstruct visibility.
5. Do not change grips on an object while carrying or holding an object. Rest the object on a secure surface prior to changing grip.
6. If an object is of a size, shape, or mass that it requires two people to carry, use two people of similar size and physique. Two-person lifts should be planned and coordinated before performing the lift. Lift the item in unison.
7. Avoid carrying objects on stairs, particularly where the line of sight may be obstructed or the object can interfere with leg movement. All travel on stairs requires use of a handrail at all times, so only carry objects that can be safely handled with one hand. Always maintain handrail contact when carrying an object up or down stairs.

E. Pushing/Pulling Guidelines

1. Check the condition of the floor, ground, or other surface prior to pushing or pulling an object across it.
2. Be aware of the “break out” force of the object; this is the force at which a push or pull overcomes the frictional force between the surface and object. Adjust posture to avoid losing balance when this point is reached.
3. Get assistance when moving or guiding a large load.
4. Where possible, always push rather than pull a load.

5. Never load the cart or load-carrying device in such a manner that visibility is obstructed in the path of travel.
6. When pushing or pulling an object on an inclined surface, be certain that you can control the load and direction of travel before proceeding. Obtain additional support to control the load if necessary.
7. Never leave carts or loads in an area that will present a hazard to other workers. Make sure carts or transport devices are secured in position before leaving them unattended.

F. Workplace Design

1. Store heavy or bulky materials at heights between the knee and shoulder to avoid the need to stretch or bend. Use step stools to access objects above shoulder height.
2. Pack or arrange items to be lifted to avoid shifting of weight in the package. If a box has hand cutouts (e.g., file archive boxes) do not load the box so full that the handles cannot be used for carrying the box.
3. Design work areas to avoid the need to lift, carry, push, or pull heavy or bulky materials for extended distances.
4. Design workplaces with the following in mind:
    a. Lifts from the floor should be avoided.
    b. The torso should never twist while handling loads.
    c. Asymmetrical or unbalanced one-handed lifts should be avoided.
    d. Loads should not be lifted with sudden movements.
    e. Loads should not be lifted over obstacles.
    f. Loads should not be lifted at extended forward or sideway reaches.
    g. Uncomfortable or static postures should not be necessary throughout the work cycle.
    h. Environmental factors (e.g., task lighting, dry work surfaces, heat or cold stress) should be considered.

G. Training

1. Personnel who may have MMH as part of their duties are required to receive training that includes the following topics:

a. Showing personnel how to avoid unnecessary physical stress and strain during MMH operations.

b. Teaching personnel to become aware of what they can comfortably handle without undue strain.

c. Instructing personnel on the proper use of equipment.

d. Teaching personnel to recognize potential hazards and how to prevent or correct them.

2. This training must be completed prior to an employee being assigned to a task that involves MMH activities.

3. Assistance with training or training materials is available through the HSE staff.

5. Documentation Summary

The following documentation will be maintained in the project file:

A. Training rosters.

B. Other proof of completion of MMH training.

6. Resources

A. National Institute for Occupational Safety and Health (NIOSH) – Work Practices Guide for Manual Lifting http://www.cdc.gov/niosh

B. Canadian Centre for Occupational Health and Safety http://www.ccohs.ca/oshanswers/ergonomics/

C. Oregon OSHA – Ergonomics of Manual Materials Handling http://www.cbs.state.or.us/external/osha/pdf/workshops/206w.pdf

D. North Carolina Department of Labor – A Guide to Manual Materials Handling and Back Safety http://www.nclabor.com/osha/etta/indguide/ig26.pdf

7. Supplemental Information

A. Recommended Weight Limit (RWL) Calculations

This lifting equation, developed by the National Institute for Occupational Safety and Health (NIOSH), takes into account the weight of an object plus several other variables in lifting tasks that contribute to the risk of injury. For example, if the situation requires frequent lifts or lifting loads far away from the body, there is an increased risk of injury. Under these conditions, the weight limit would be reduced from a baseline weight or "load constant" (LC) to a recommended weight limit (RWL). A "load constant" (LC) of 23 kg (about 51 pounds) has been established by NIOSH as a load that, under ideal conditions, is safe for 75% of females and 90% of males.

To calculate the RWL, you must first measure or assess several variables related to the lifting task. The six variables that are considered in determining the RWL are:

- The horizontal distance (H) the load is lifted (distance of hands from midpoint between ankles),
- The starting height of the hands from the ground (V),
- The vertical distance of lifting (D),
- The time between lifts or frequency of lifting (F),
- The angle of the load in relation to the body (e.g., straight in front of you or off to the side, A), and
- The quality of the grasp or handhold based on the type of handles available (hand-to-load coupling, C).

Each of these variables is then assigned a numerical value (multiplier factor) from look-up charts. The equation includes six multiplier factors to calculate the RWL:

$$RWL = LC \times HM \times VM \times DM \times FM \times AM \times CM$$

Where LC is the load constant (23 kg) and other factors in the equation are:

- HM, the "Horizontal Multiplier" factor,
- VM, the "Vertical Multiplier" factor,
- DM, the "Distance Multiplier" factor,
- FM, the "Frequency Multiplier" factor,
- AM, the "Asymmetric Multiplier" factor, and
- CM, the "Coupling Multiplier" factor.

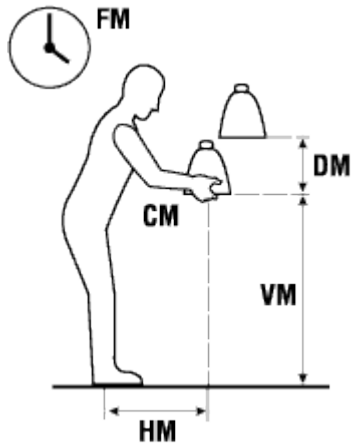

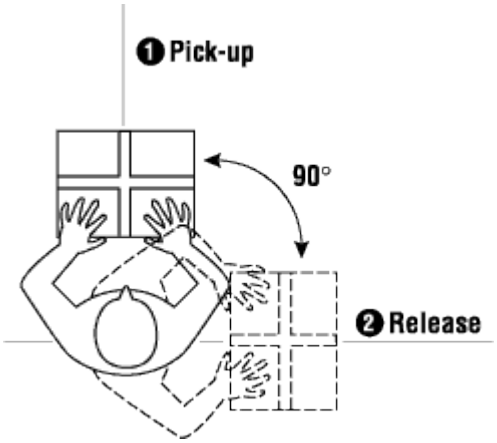

Horizontal Multiplier is the distance the object is from the body. Measure (in centimeters) the distance from in between the person's ankles to their hands when holding the object. Write down this number. Next, look up the number on the accompanying chart and find the matching "multiplier factor". Use this factor in the lifting equation.

Vertical Multiplier is measured as the starting point of the lift and is the distance in centimeters of the hands up from the ground. Measure this distance and use the number to determine which value to use on the chart.

Distance Multiplier is the number of centimeters the load travels up (or down) from the starting position. Measure this distance and use the number to determine which value to use on the chart.

Frequency Multiplier is how often the lift is repeated within a certain time period. You need to determine if the lift is done while standing or stooping, for more or less than one hour (in total time for the shift), and how much time there is for rest between lifts.

Asymmetric Multiplier measures if the body must twist or turn during the lift. This measurement is done in degrees (with 360° being one complete circle).

Coupling Multiplier determines the "coupling" or type of grasp the person has on the container. It rates the type of handles as good (handles), fair (make-shift cut outs in cardboard boxes) or poor. You also need to know if the lift is done in a standing or stooping position.

When these multipliers are placed into the equation, determine the RWL. If the weight of the object to be lifted exceeds the RWL, the task is considered to be dangerous. Assess the relevant factors which contribute most to the risk (the lower the factor, the more it contributes to the risk) and redesign the handling task.

The lifting equation only applies in certain situations. It does not apply in situations where a person is lifting (or lowering):

- With one hand,
- For over 8 hours,
- While seated or kneeling,
- In a restricted work space,
- Objects that are unstable (such as buckets or containers of liquids),
- While pushing or pulling,
- With wheelbarrows or shovels,
- With high speed motion (faster than about 30 inches/second),
- Extremely hot or cold objects or in extreme temperatures, or
- With poor foot/floor coupling (high risk of a slip or fall).

This equation applies to most workers for:

- Two-handed lifting,
- Comfortable lifting postures, and
- Comfortable environments and non-slip floorings.

FACTORS USED IN RWL CALCULATIONS

Horizontal Multiplier (HM): Horizontal distance (H, in cm) from the midpoint between the ankles to the hands while holding the object.

H = Horizontal Distance (cm)	HM Factor
25 or less	1.00
30	0.83
40	0.63
50	0.50
60	0.42

Vertical Multiplier (VM): The vertical distance (V, in cm) of the hands from the ground at the start of the lift.

V = Starting Height (cm)	VM Factor
0	0.78
30	0.87
50	0.93
70	0.99
100	0.93
150	0.78
175	0.70
>175	0.00

Distance Multiplier (DM): The vertical distance (D, in cm) that the load travels.

D = Lifting Distance (cm)	DM Factor
25 or less	1.00
40	0.97
55	0.90
100	0.87
145	0.85
175	0.85
>175	0.00

Asymmetric Multiplier (AM): The twisting angle (A) of the body while lifting, measured in degrees.

A = Angle (degrees)	AM Factor
90°	0.71
60°	0.81
45°	0.86
30°	0.90
0°	1.00

Frequency Multiplier (FM): The frequency (F) of lifts and the duration of lifting (in minutes or seconds) over a work shift.

F = Time Between Lifts	FM Factor			
	Lifting While Standing		Lifting While Stooping	
	One Hour or Less	Over One Hour	One Hour or Less	Over One Hour
5 min	1.00	0.85	1.00	0.85
1 min	0.94	0.75	0.94	0.75
30 sec	0.91	0.65	0.91	0.65
15 sec	0.84	0.45	0.84	0.45
10 sec	0.75	0.27	0.75	0.27
6 sec	0.45	0.13	0.45	-
5 sec	0.37	-	0.37	-

Coupling Multiplier (CM): The quality of grasp (or coupling, C) classified as good, fair or poor and depends on the body position (either standing or stooping).

C = Grasp	CM Factor	
	Standing	Stooping
Good (handles)	1.00	1.00
Fair	1.00	0.95
Poor	0.90	0.90

URS SAFETY MANAGEMENT STANDARD

Powered Industrial Trucks

1. Applicability

This standard applies to the operations of URS Corporation and its subsidiary companies.

2. Purpose and Scope

The purpose of this standard is to provide direction for the safe operation of powered industrial trucks, thus limiting the potential for injury to both the operators of the equipment and ground personnel working in the immediate vicinity. A powered industrial truck is defined as a mobile, power-propelled truck used to carry, push, pull, lift, stack, or tier materials. Forklifts, pallet trucks, rider trucks, fork trucks, lift trucks, pallet jacks, motorized hand trucks, and skid steer loaders are all types of powered industrial trucks.

3. Procedures

The associated implementing regional procedures for this standard are included as attachments:

SMS 070 NA – North America; Australia / New Zealand

SMS 070 INT – International Operations (including Europe, Asia, South America and Africa)

URS SAFETY MANAGEMENT STANDARD

Powered Industrial Trucks

1. Applicability

This standard applies to the operations of URS Corporation and its subsidiary companies that use powered industrial trucks. A powered industrial truck is defined as a mobile, power-propelled truck used to carry, push, pull, lift, stack, or tier materials. Forklifts, pallet trucks, rider trucks, fork trucks, lift trucks, pallet jacks, motorized hand trucks, and skid steer loaders are all types of powered industrial trucks. This standard does not apply to aerial lifts, cranes, or vehicles intended primarily for earth-moving or over-the-road hauling.

2. Purpose and Scope

The purpose of this standard is to provide direction for the safe operation of powered industrial trucks on all operations of URS Corporation and its subsidiary companies, thus limiting the potential for injury to both the operators of the equipment and ground personnel working in the immediate vicinity.

3. Implementation

Implementation of this standard is the responsibility of the URS manager directing activities of the facility, site or project location.

4. Requirements

A. Eligibility

1. Train and authorize employees operating a powered industrial truck to use the specific type of truck to which they are assigned. Training and evaluation must be conducted by personnel with adequate knowledge, training, and experience in the operation of the truck.
2. Maintain employee training documentation in the health and safety files.
3. Training will consist of a combination of formal instruction, practical training, and an evaluation of the operator's performance, and should consist of the following subjects:
   a. Operating instructions, warnings, and precautions;
   b. Differences between the truck and automobiles;
   c. Truck controls and instrumentation;
   d. Engine/motor operation;
   e. Steering and maneuvering;
   f. Visibility, including restrictions;
   g. Attachment adaptation, operation, and use limitations;

h. Vehicle capacity and stability;

i. Refueling and/or recharging;

j. Vehicle inspection and maintenance required by the operator;

k. Operating limitations; and

l. Any other instructions, warnings, and precautions listed in the operator's manual.

4. Operators completing training will receive a certificate of completion. The certificate will include:

- Name of the operator
- Date of training
- Date of evaluation
- Identity of the person(s) performing the training evaluation.

5. Refresher training must be conducted at least once every 3 years. Refresher training may be conducted on an as-needed basis if:

a. The operator is observed to be using the truck in an unsafe manner;

b. The operator has been in an accident or a near-miss incident that is attributable to the operation of the truck;

c. The operator receives an evaluation that indicates unsafe operation of the truck;

d. The operator is assigned a different type of truck; or

e. A change occurs in the workplace that could affect the safe operation of the truck.

B. Inspections

1. Inspect the truck daily or before each shift.

2. Inspections should include each of the following:

a. Adjustment and wear of the control mechanisms;

b. Operation of safety devices (horns, seat belts, etc.);

c. Operation/deterioration of the hydraulic systems;

d. Operation of electrical systems;

e. Operation of steering and breaking systems; and

f. Condition of truck tires.

3. Use Attachment 070-1 NA as a guide to inspections for battery-operated lift trucks, and Attachment 070-2 NA as a guide to inspections for engine-powered lift trucks.
4. Report any damage or problems identified during the inspection to your immediate supervisor. Tag and remove equipment from service when defects are found that can affect the safe operation. Do not use equipment until the damage or problems have been corrected.
5. Approved trucks will carry labels, nameplates, or identifying marks indicating the following:
   a. Approval of the truck for fire safety purposes by a nationally recognized testing laboratory;
   b. Capacity of the truck and its attachments;
   c. Operation and maintenance instructions; and
   d. Designation of the truck, based on fuel type and fire safety features. The eleven standard truck designations are discussed in Supplemental Information A.
6. Ensure that all labels, nameplates, or identifying marks are maintained in legible condition.

C. Operation

1. There are many types of powered industrial trucks for various applications. Use a type suitable for the task. Supplemental Information A provides additional information on the types of powered industrial trucks available.
2. Review and follow truck operating instructions as provided in the machine's operator manual.
3. Securely fasten seat belts or other restraining devices. Remain seated at all times while the truck is in operation.
4. Keep body parts within the truck while driving. Do not place any part of the body between mast uprights or any other part of the truck where a shear or crushing hazard may exist.
5. Look toward and keep a clear view of the path of travel.
6. Do not permit passengers to ride on the truck unless a separate seat and restraining device are provided.
7. Use extreme caution on or near ditches, holes, embankments, grades, ramps, or other slopes. Avoid turning on grades. Avoid use of the truck in areas where cracks and crumbling surface

materials may be present. Never run over loose objects on the roadway surface.

8. Do not make quick starts, jerky stops, or turns at excessive speeds.
9. Slow the truck and sound the horn at cross aisles, intersections, building corners, or other locations where vision is obstructed. Lightly tap the horn to warn pedestrians when approaching from behind.
10. Operate the truck only at those speeds that will permit it to be stopped safely. Pay particular attention to wet or slippery surfaces.
11. Do not drive the truck up to anyone standing in front of a fixed object.
12. Observe all traffic regulations and signage. Maintain at least three truck lengths from other vehicles following the same travel path.
13. Cross railroad tracks or other bumps in the travel path diagonally where possible.
14. Engage the parking brake, lower any lifting devices, and neutralize all controls (e.g. remove keys) before dismounting from the truck. Block or chock the wheels if parked on an incline.
15. Turn off the truck engine when it is not under direct control of the operator (e.g., within 10 feet [3 meters] of the operator).
16. Stunt driving or horseplay is strictly prohibited.
17. Never allow anyone to ride on a truck's lifting device (if present) unless a legally acceptable elevating platform is used. If an elevating platform is used to raise personnel to a higher level, secure the elevating platform to the lifting carriage of the truck. Additionally, use a restraining device such as a rail, chain, or body belt with a lanyard for the employee on the platform.
18. In the event that a truck overturns, do not attempt to jump from the machine. Stay in the truck, holding on firmly and leaning in the opposite direction of the overturn.
19. Restrict the use of trucks in areas where large numbers of pedestrians are present (e.g., break areas, primary exits, etc.).
20. Use trucks only for the purpose for which they were designed. Do not use trucks to bump, push, or otherwise move materials or other trucks.

D. Lifting and Moving Loads

1. Handle only stable or safely arranged loads.
2. Place heavy objects with the weight as low as possible.
3. Block or tie objects as necessary to prevent tipping or rolling.
4. Do not load objects to a height that blocks the view of the operator.
5. Do not exceed the rated capacity of the truck or of any attachments. Attachments must have a load rating plate affixed indicating the weight that may safely be carried.
6. Do not raise or lower a truck's lifting devices while the truck is in motion.
7. Use extreme care when tilting loads. Tilting a truck attachment forward (e.g., forks, etc.) is prohibited except when picking up or depositing a load.
8. On grades, tilt the load back slightly and raise it only as far as is needed to clear the road surface. For grades in excess of 10 percent, keep the load pointed upslope when ascending or descending.
9. If using a truck to load or unload materials from a trailer or rail car, ensure that their brakes are set and that wheel blocks have been set prior to loading or unloading. Inspect the flooring of trailers and rail cars for breaks or weakness prior to driving onto them.
10. Ensure that dock boards and/or bridge plates are properly secured before being driven over. Drive over dock boards and bridge plates slowly. Never exceed the rated capacity of a dock board or bridge plate.
11. Be observant of overhead installations and utilities such as doorways, pipes, sprinklers, and lights. Review travel pathways for sufficient clearance.

E. Ground Personnel

1. Separate truck traffic and ground personnel where possible.
2. If possible, install physical barriers between workstations and truck travel paths.
3. Do not stand or pass underneath the raised portion of a truck.
4. Do not stand between an operating truck and a fixed object (i.e., walls, posts, docks, benches).
5. Do not ride on the forks. Do not ride in the cab of a truck unless specifically permitted to do so (see Section C).

F. Service and Maintenance

1. Turn off engines before filling or replacing fuels tanks or recharging/replacing batteries. Ensure that “No Smoking” signs are posted in refueling and/or recharging areas. Immediately clean up any fuel, oil, or electrolyte leaks.
2. Provide appropriate personal protective equipment to personnel assigned to charging and changing batteries, including, but not limited to, eye protection, protective barrier creams, protective clothing, safety boots, gloves, and respiratory protection.
3. Battery charging locations must be provided with facilities for:
   a. Flushing and neutralizing spilled electrolyte;
   b. Fire protection;
   c. Protection of charging apparatus; and
   d. Adequate ventilation for dispersal of fumes.
4. Remove trucks in need of repair from service until restored to a safe operating condition. Repairs may only be completed by qualified maintenance personnel or organizations.
5. Disconnect or lock out power sources before repairs can be started.
6. Modifications, additions, or attachments that will affect the capacity and safe operation of the truck are prohibited without the written approval of the manufacturer.
7. Trucks shall be maintained in accordance with manufacturer’s instructions and inspections conducted in accordance with any local regulatory requirements.

G. Hazardous Atmospheres

1. Classify the atmosphere of a work location as to whether it is hazardous or non-hazardous prior to considering which designation of powered industrial truck to use in the area.
2. Do not use powered industrial trucks in atmospheres containing hazardous concentrations of acetylene, butadiene, ethylene oxide, hydrogen (or gases or vapors equivalent in hazard to hydrogen, such as manufactured gas), propylene oxide, acetaldehyde, cyclopropane, diethyl ether, ethylene, isoprene, or unsymmetrical dimethyl hydrazine (UDMH).
3. Do not use powered industrial trucks in atmospheres containing hazardous concentrations of aluminum (and its commercial alloys), magnesium (and its commercial alloys), or other metals of similarly hazardous characteristics.

4. A list describing the use of powered industrial trucks in hazardous atmospheres by truck designation is provided in Supplemental Information A.
5. Evaluate carbon monoxide concentrations to ensure that they do not exceed published exposure limits when using fuel-powered trucks in an enclosed area.

5. Documentation Summary

The following documentation will be maintained in the project file:

A. Employee training records.

B. Truck inspections.

6. Resources

A. U.S. Occupational Safety and Health Administration (OSHA) 29 Code of Federal Regulations (CFR) 1910.178 (Powered Industrial Trucks)

B. American Society of Mechanical Engineers B56.1-2000

C. Daily Battery-Powered Industrial Truck Safety Inspection Checklist – Attachment 070-1 NA

D. Daily Engine-Powered Industrial Truck Safety Inspection Checklist – Attachment 070-2 NA

7. Supplemental Information

A. Powered Industrial Truck Designations and Use in Various Hazardous Locations

URS	Health, Safety and Environment **DAILY BATTERY-POWERED INDUSTRIAL TRUCK SAFETY INSPECTION CHECKLIST**	Attachment 070-1 NA Issue Date: September 2004 Revision 2: February 2009

Equipment ID No.: _____ Inspector's Name: _____

Equipment Name: _____ Employee Number: _____

INSTRUCTIONS: The operator will inspect all applicable items indicated at the start of each shift. If an unsatisfactory condition is observed, immediately suspend operation of the truck and report the unsatisfactory condition to the site supervisor.

ITEM INSPECTED	SATISFACTORY?		COMMENTS
Falling Object Protective Structure	☐ Yes	☐ No	
Seat Belts	☐ Yes	☐ No	
Grab Handles	☐ Yes	☐ No	
Back-up Alarm	☐ Yes	☐ No	
Lights	☐ Yes	☐ No	
Horn	☐ Yes	☐ No	
Mirrors	☐ Yes	☐ No	
Fire Extinguisher	☐ Yes	☐ No	
Battery Connection	☐ Yes	☐ No	
Battery Charge	☐ Yes	☐ No	
Battery Load Test	☐ Yes	☐ No	
Hydraulic System	☐ Yes	☐ No	
Hydraulic Controls	☐ Yes	☐ No	
Gauge and Instrument Operation	☐ Yes	☐ No	
Tires	☐ Yes	☐ No	
Steering	☐ Yes	☐ No	
Brakes: Service and Emergency	☐ Yes	☐ No	
Attachments	☐ Yes	☐ No	
Informational Plates/ Markings	☐ Yes	☐ No	
Other (as appropriate)	☐ Yes	☐ No	

Operator Signature: _____

Date: _____ Time: _____

URS	Health, Safety and Environment **DAILY ENGINE-POWERED INDUSTRIAL TRUCK SAFETY INSPECTION CHECKLIST**	Attachment 070-2 NA Issue Date: September 2004 Revision 2: February 2009

Equipment ID No.: _____ Inspector's Name: _____

Equipment Name: _____ Employee Number: _____

INSTRUCTIONS: The operator will inspect all applicable items indicated at the start of each shift. If an unsatisfactory condition is observed, immediately suspend operation of the truck and report the unsatisfactory condition to the site supervisor.

ITEM INSPECTED	SATISFACTORY?		COMMENTS
Falling Object Protective Structure	☐ Yes	☐ No	
Seat Belts	☐ Yes	☐ No	
Grab Handles	☐ Yes	☐ No	
Back-up Alarm	☐ Yes	☐ No	
Lights	☐ Yes	☐ No	
Horn	☐ Yes	☐ No	
Mirrors	☐ Yes	☐ No	
Fire Extinguisher	☐ Yes	☐ No	
Fuel level	☐ Yes	☐ No	
Oil Pressure and Level	☐ Yes	☐ No	
Radiator Water Level	☐ Yes	☐ No	
Hydraulic System	☐ Yes	☐ No	
Hydraulic Controls	☐ Yes	☐ No	
Gauge and Instrument Operation	☐ Yes	☐ No	
Tires	☐ Yes	☐ No	
Steering	☐ Yes	☐ No	
Brakes: Service and Emergency	☐ Yes	☐ No	
Attachments	☐ Yes	☐ No	
Informational Plates/ Markings	☐ Yes	☐ No	
Other (as appropriate)	☐ Yes	☐ No	

Operator Signature: _____

Date: _____ Time: _____

Designation	Description
D	Diesel powered units having minimum acceptable safeguards against inherent fire hazards
DS	Diesel powered units provided with additional safeguards to the exhaust, fuel, and electrical system
DY	Diesel powered units provided with DS unit safeguards which have no electrical equipment (including ignition) and are equipped with temperature limitation features
E	Electrically powered units having minimum acceptable safeguards against inherent fire hazards
ES	Electrically powered units provided with additional safeguards to the electrical system to prevent emission of hazardous sparks and to limit surface temperatures
EE	Electrically powered units that have the electric motor and all other electrical equipment completely enclosed
EX	Electrically powered units in which electrical fittings and equipment are so designed, constructed, and assembled that the units may be used in certain atmospheres containing flammable vapors or dusts
G	Gasoline powered units having minimum acceptable safeguards against inherent fire hazards
GS	Gasoline powered units provided with additional safeguards to the exhaust, fuel, and electrical systems
LP	Liquefied petroleum gas powered units having minimum acceptable safeguards against inherent fire hazards
LPS	Liquefied petroleum gas powered units provided with additional safeguards to the exhaust, fuel, and electrical systems

Designation	Use Location
D	Piers, wharves, general storage, industrial or commercial properties with no hazardous atmospheres
DS	• Storage of hazardous liquids in sealed containers • Storage of liquefied or compressed gases in containers • Storage or handling of easily ignitable fibers • Any location designated for D units
DY	• Areas where volatile flammable liquids or gases are handled, processed, or used, but in which the hazard is normally contained within a closed container or system • Areas where deposits of accumulations of ignitable dusts are sufficient to be ignited by arcs or sparks originating from the truck • Areas where ignitable fibers or flyings are present, but are not likely

Designation	Use Location
	to be present in quantities to produce ignitable mixtures • Any location designated for DS units
E	Piers, wharves, general storage, industrial or commercial properties with no hazardous atmospheres
ES	• Storage of hazardous liquids in sealed containers • Storage of liquefied or compressed gases in containers • Storage or handling of easily ignitable fibers • Any location designated for E units
EE	• Areas where volatile flammable liquids or gases are handled, processed, or used, but in which the hazard is normally contained within a closed container or system • Areas where deposits of accumulations of ignitable dusts are sufficient to be ignited by arcs or sparks originating from the truck • Areas where ignitable fibers or flyings are present, but are not likely to be present in quantities to produce ignitable mixtures • Any location designated for ES units
EX	• Areas where combustible dust is or may be in suspension constantly, intermittently, or periodically under normal conditions in quantities sufficient to produce explosive or ignitable mixtures (typically includes grain, flour, starch, or other organic dust-producing facilities; coal pulverizing plants; metal dust and powder producing facilities; and other similar locations) • Any location designated for EE units
G	Piers, wharves, general storage, industrial or commercial properties with no hazardous atmospheres
GS	• Storage of hazardous liquids in sealed containers • Storage of liquefied or compressed gases in containers • Storage or handling of easily ignitable fibers • Any location designated for G units
LP	Piers, wharves, general storage, industrial or commercial properties with no hazardous atmospheres
LPS	• Storage of hazardous liquids in sealed containers • Storage of liquefied or compressed gases in containers • Storage or handling of easily ignitable fibers • Any location designated for LP units