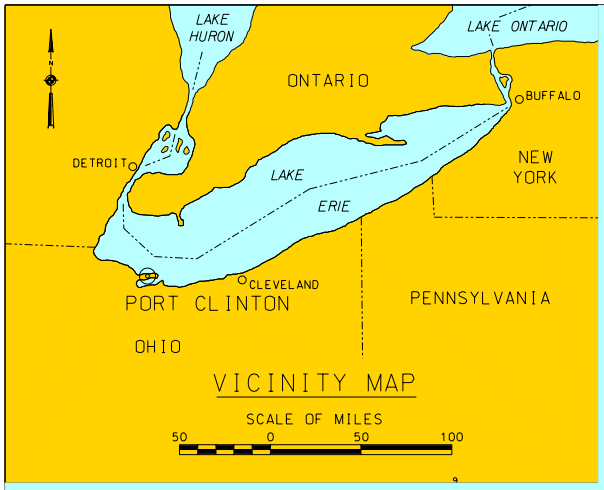

VICINITY MAP

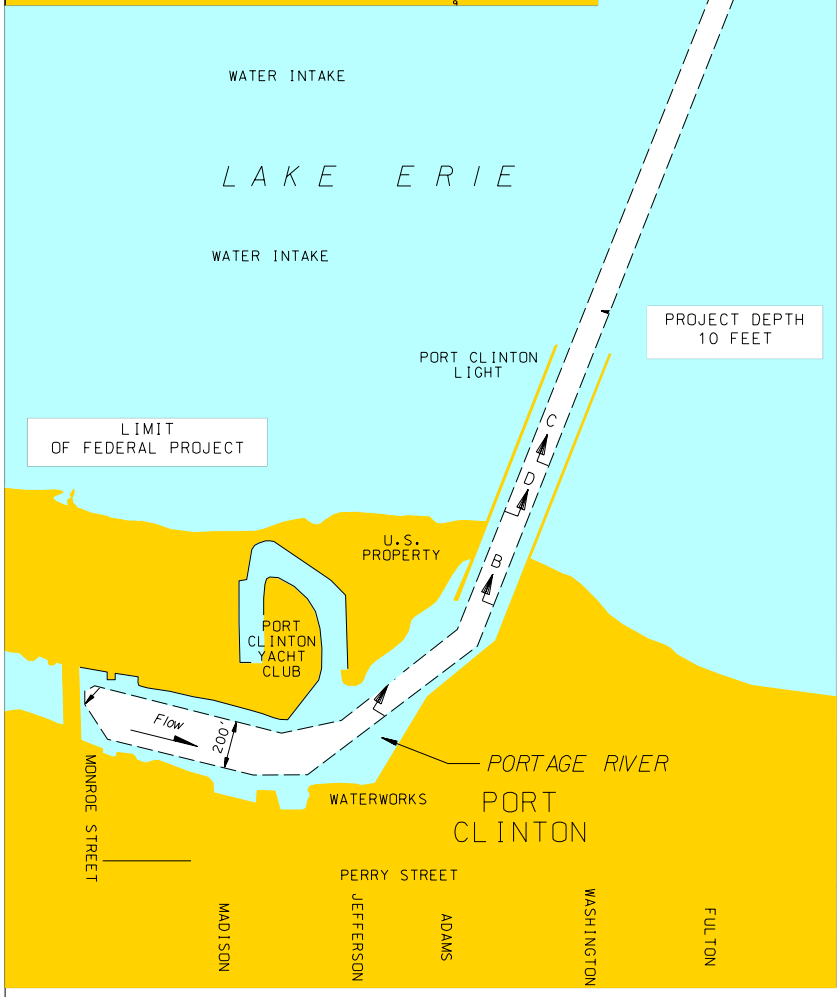

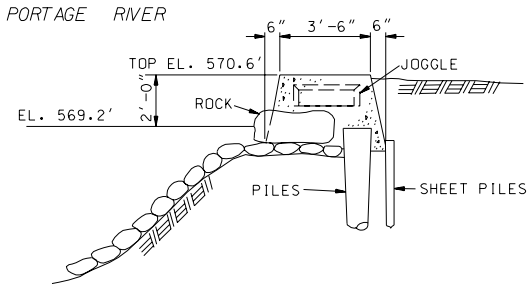

SECTION A-A

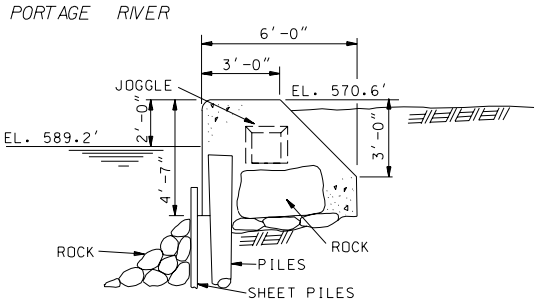

SECTION B-B

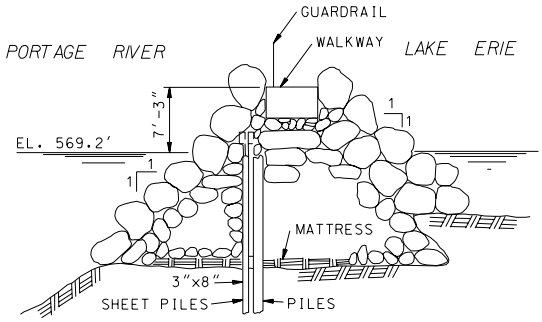

SECTION C-C

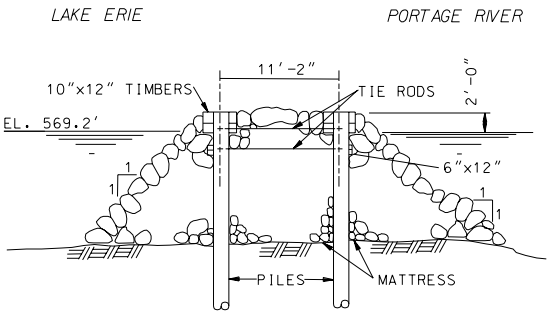

SECTION D-D

INDEX TO BRIDGES
SHOWN THUS (1)

(1) MONROE STREET BRIDGE

NOTE

(2) INDICATES STATE ROUTE

PROJECT DEPTHS, SOUNDINGS AND ELEVATIONS ARE REFERRED TO INTERNATIONAL GREAT LAKES DATUM (1985) FOR LAKE ERIE, ELEVATION 569.2 FEET ABOVE MEAN WATER LEVEL (M.W.L.) AT RIMOUSKI, QUEBEC

PORT CLINTON HARBOR
OHIO

SCALE OF FEET
500 0 500 1000

U.S. ARMY ENGINEER DISTRICT BUFFALO
MAY 2000