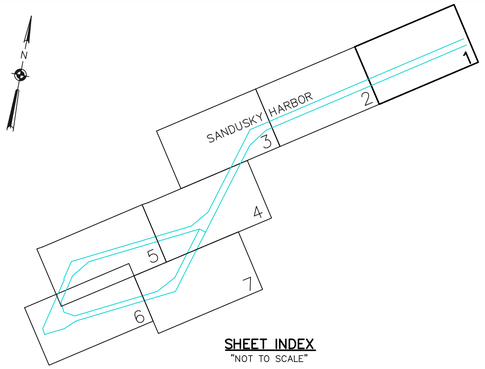

SHEET INDEX
"NOT TO SCALE"

SOUNDING COLOR LEGEND

	DEPTHS 0.1' OR MORE ABOVE PROJECT DEPTH
	DEPTHS AT OR BELOW PROJECT DEPTH
21.0	PROJECT DEPTH

LEGEND OF SYMBOLS

17+00	CHANNEL STATIONING
417	CHANNEL CORNER
H.L.F.	HARBOR LINE CORNER
	FEDERAL CHANNEL
	HARBOR LINE
	SUBMARINE CABLE
c	CAN BUOY
N	NUN BUOY
	LIGHTED BUOY
	FIXED LIGHT
	LIGHT HOUSE
W	LIGHT COLOR WHITE
R	LIGHT COLOR RED
G	LIGHT COLOR GREEN
FL	FLASHING LIGHT
F	FIXED LIGHT
Oc	OCCULTING LIGHT
Iso	EQUAL INTERVAL
AL	ALTERNATING
Q	QUICK (FLASHING)

SITE SPECIFIC NOTES

1.PROJECT DEPTHS AND SOUNDINGS ARE U.S. SURVEY FEET REFERRED TO LOW WATER DATUM OF 569.2 FEET ABOVE INTERNATIONAL GREAT LAKES DATUM 1985 (IGLD85).

2.HORIZONTAL COORDINATES ARE U.S. SURVEY FEET REFERRED TO NORTH AMERICAN DATUM 1983 (NAD83) OHIO STATE PLANE COORDINATE SYSTEM – NORTH ZONE.

3.PROJECT DEPTH IS AS NOTED BELOW LOW WATER DATUM.

4.SOUNDINGS WERE TAKEN BY THE BUFFALO DISTRICT ARMY CORPS OF ENGINEERS BY C. STRONG AND PARTY ON JULY 20 THRU SEPTEMBER 28, 2015:
GPS POSITIONING, POS–MV VER. 5 AND RTK TIDES
SONAR HEAD: 200 KHZ, R2 SONIC 2024 MULTIBEAM
1.0 DEGREE BEAMS 150 DEGREE ARC
HEAVE PITCH AND ROLL; APPLANIX POS–MV VER. 5
VELOCITY PROFILER; SONTEK CASTAWAY CTD
HYPACK SURVEY SOFTWARE
SURVEY VESSEL MONSON

5.THE SOUNDING INFORMATION DEPICTED ON THE MAP REPRESENTS THE RESULTS OF SURVEYS MADE ON THE DATE INDICATED AND CAN ONLY BE CONSIDERED AS INDICATING THE GENERAL CONDITION AT THAT TIME.

6.THE BACKGROUND IMAGERY SHOWN WAS ACQUIRED FROM THE OHIO GEOGRAPHICALLY REFERENCED INFORMATION PROGRAM.

7.THIS SURVEY WAS PREPARED IN ACCORDANCE WITH THE STANDARDS OUTLINED IN CORPS OF ENGINEERS HYDROGRAPHIC SURVEY MANUAL EM 1110–2–1003.

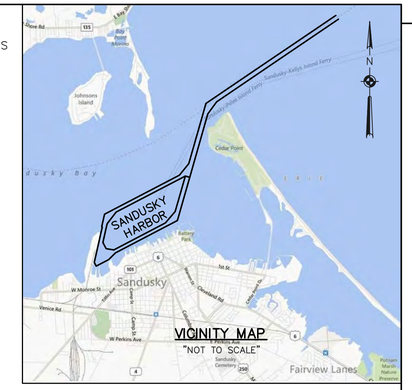

VICINITY MAP
"NOT TO SCALE"

CHANNEL CORNER COORDINATES		
POINT	NORTHING	EASTING
400	670045.73	1923946.56
400A	671401.11	1926047.12
438	670381.84	1923729.69
438A	671737.22	1925830.25

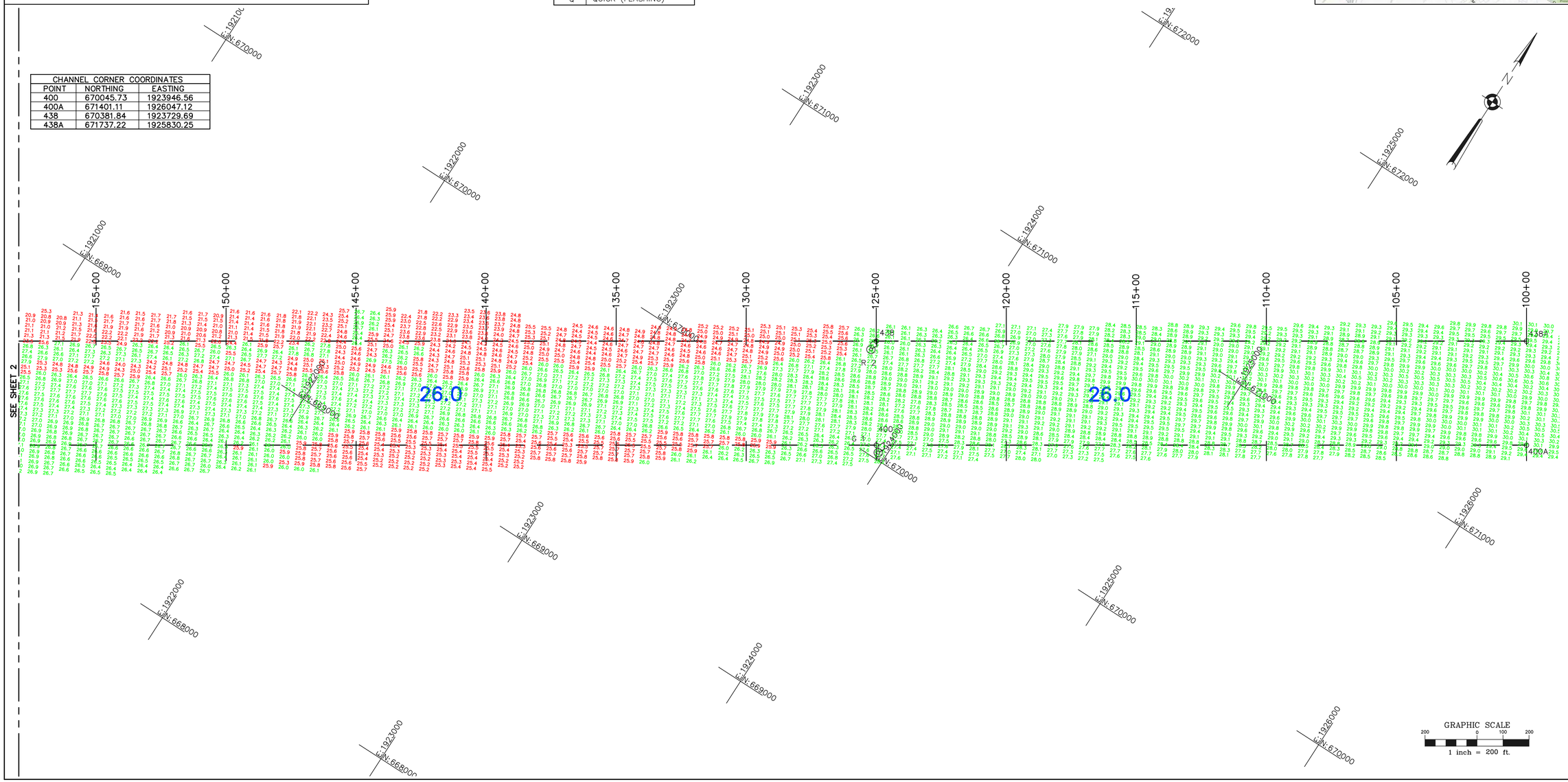

US Army Corps of Engineers
Buffalo District

REVISION NOTES	
PURPOSE	DATE

** COPY OF ** SIGNED ORIGINAL

Drawn by: ACK
Checked by: KPL
Reviewed by: Roman H. Figlar III PLS
Chief, Survey Section
Approved: Edward F. Gawarecki
Chief, NY–PA O & M Office

U.S. ARMY ENGINEER DISTRICT
CORPS OF ENGINEERS
BUFFALO, NEW YORK 14207–3199

SANDUSKY, OHIO
SANDUSKY HARBOR
PROJECT CONDITION SOUNDINGS 2015
SCALE: 1" = 200'

Sheet reference number
VH–101
Sheet 1 of 7

Original sheet size = ANSI D

To download an electronic version of this map, point a web browser to http://www.lrb.usace.army.mil/WhoWeAre/NoteMgmt/Survey/Survey.html

D:\Survey Drive Projects\OH–Sandusky Harbor\Channel Maintenance\Drawing Files (Cad)\2015\san15vh7.dwg

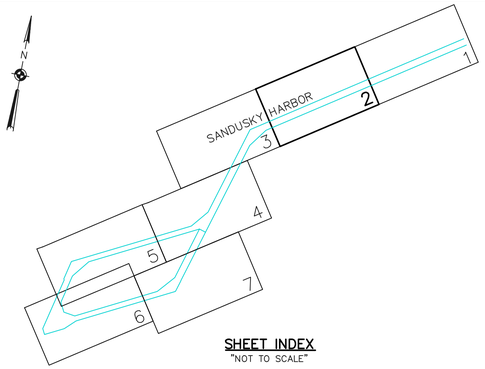

SHEET INDEX
"NOT TO SCALE"

SOUNDING COLOR LEGEND

	DEPTHS 0.1' OR MORE ABOVE PROJECT DEPTH
	DEPTHS AT OR BELOW PROJECT DEPTH
21.0	PROJECT DEPTH

LEGEND OF SYMBOLS

17+00	CHANNEL STATIONING
417	CHANNEL CORNER
H.L.F.	HARBOR LINE CORNER
	FEDERAL CHANNEL
	HARBOR LINE
	SUBMARINE CABLE
c	CAN BUOY
N	NUN BUOY
	LIGHTED BUOY
	FIXED LIGHT
	LIGHT HOUSE
W	LIGHT COLOR WHITE
R	LIGHT COLOR RED
G	LIGHT COLOR GREEN
FL	FLASHING LIGHT
F	FIXED LIGHT
Oc	OCCULTING LIGHT
Iso	EQUAL INTERVAL
AL	ALTERNATING
Q	QUICK (FLASHING)

SITE SPECIFIC NOTES

1.PROJECT DEPTHS AND SOUNDINGS ARE U.S. SURVEY FEET REFERRED TO LOW WATER DATUM OF 569.2 FEET ABOVE INTERNATIONAL GREAT LAKES DATUM 1985 (IGLD85).

2.HORIZONTAL COORDINATES ARE U.S. SURVEY FEET REFERRED TO NORTH AMERICAN DATUM 1983 (NAD83) OHIO STATE PLANE COORDINATE SYSTEM – NORTH ZONE.

3.PROJECT DEPTH IS AS NOTED BELOW LOW WATER DATUM.

4.SOUNDINGS WERE TAKEN BY THE BUFFALO DISTRICT ARMY CORPS OF ENGINEERS BY C. STRONG AND PARTY ON JULY 20 THRU SEPTEMBER 28, 2015:

GPS POSITIONING, POS–MV VER. 5 AND RTK TIDES
SONAR HEAD: 200 KHZ, R2 SONIC 2024 MULTIBEAM
1.0 DEGREE BEAMS 150 DEGREE ARC
HEAVE PITCH AND ROLL; APPLANIX POS–MV VER. 5
VELOCITY PROFILER; SONTEK CASTAWAY CTD
HYPACK SURVEY SOFTWARE
SURVEY VESSEL MONSON

5.THE SOUNDING INFORMATION DEPICTED ON THE MAP REPRESENTS THE RESULTS OF SURVEYS MADE ON THE DATE INDICATED AND CAN ONLY BE CONSIDERED AS INDICATING THE GENERAL CONDITION AT THAT TIME.

6.THE BACKGROUND IMAGERY SHOWN WAS ACQUIRED FROM THE OHIO GEOGRAPHICALLY REFERENCED INFORMATION PROGRAM.

7.THIS SURVEY WAS PREPARED IN ACCORDANCE WITH THE STANDARDS OUTLINED IN CORPS OF ENGINEERS HYDROGRAPHIC SURVEY MANUAL EM 1110–2–1003.

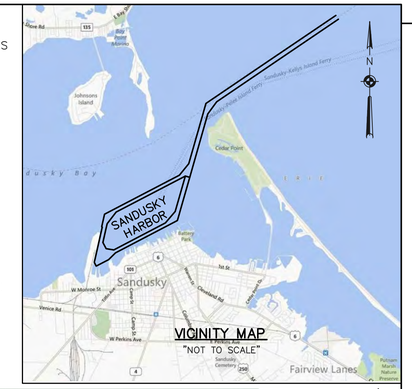

VICINITY MAP
"NOT TO SCALE"

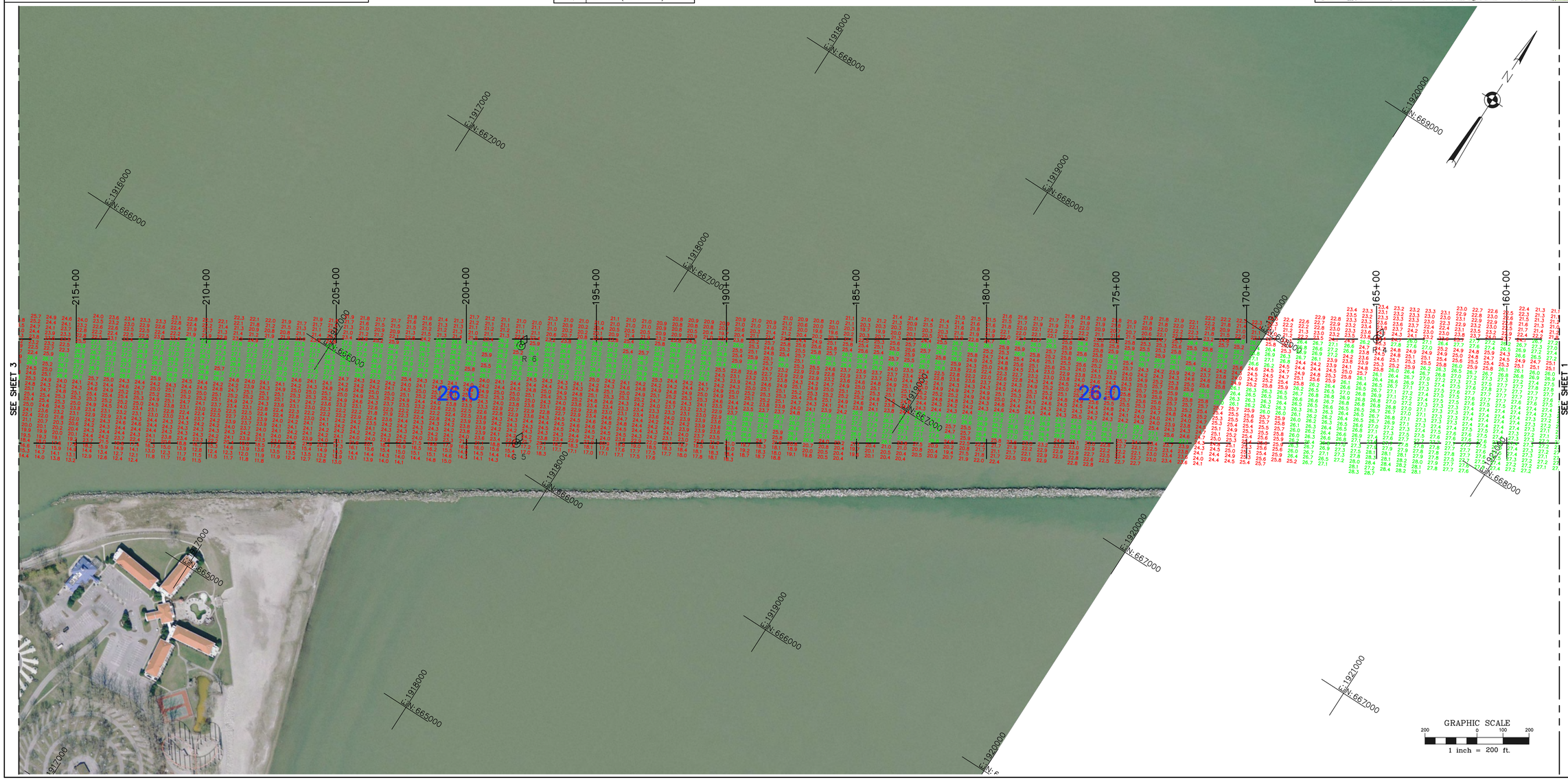

US Army Corps of Engineers
Buffalo District

REVISION NOTES	
PURPOSE	DATE

** COPY OF ** SIGNED ORIGINAL

Drawn by: ACK
Checked by: KPL
Reviewed by: Roman H. Figlar III PLS
Chief, Survey Section
Approved: Edward F. Gawarecki
Chief, NY–PA O & M Office

U.S. ARMY ENGINEER DISTRICT
CORPS OF ENGINEERS
BUFFALO, NEW YORK 14207–3199

SANDUSKY, OHIO
SANDUSKY HARBOR
PROJECT CONDITION SOUNDINGS 2015
SCALE: 1" = 200'

Sheet reference number
VH–102
Sheet 2 of 7

Original sheet size = ANSI D

To download an electronic version of this map, point a web browser to http://www.lrb.usace.army.mil/WhoWeAre/NoticeMgmt/Surveys/surveyhtml

D:\Survey Drive Projects\OH–Sandusky Harbor\Channel Maintenance\Drawing Files (Cad)\2015\san15vh7.dwg

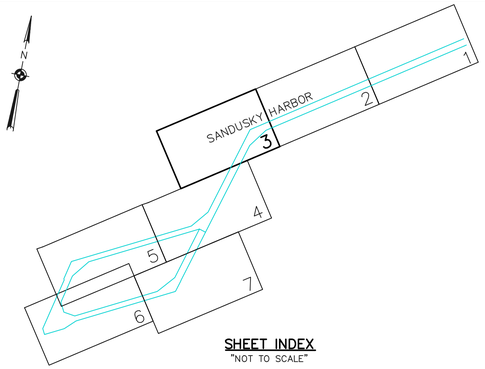

SHEET INDEX
"NOT TO SCALE"

SOUNDING COLOR LEGEND

	DEPTHS 0.1' OR MORE ABOVE PROJECT DEPTH
	DEPTHS AT OR BELOW PROJECT DEPTH
21.0	PROJECT DEPTH

LEGEND OF SYMBOLS

17+00	CHANNEL STATIONING
417	CHANNEL CORNER
H.L.F.	HARBOR LINE CORNER
	FEDERAL CHANNEL
	HARBOR LINE
	SUBMARINE CABLE
c	CAN BUOY
N	NUN BUOY
	LIGHTED BUOY
	FIXED LIGHT
	LIGHT HOUSE
W	LIGHT COLOR WHITE
R	LIGHT COLOR RED
G	LIGHT COLOR GREEN
FL	FLASHING LIGHT
F	FIXED LIGHT
Oc	OCCULTING LIGHT
Iso	EQUAL INTERVAL
AL	ALTERNATING
Q	QUICK (FLASHING)

SITE SPECIFIC NOTES

1.PROJECT DEPTHS AND SOUNDINGS ARE U.S. SURVEY FEET REFERRED TO LOW WATER DATUM OF 569.2 FEET ABOVE INTERNATIONAL GREAT LAKES DATUM 1985 (IGLD85).

2.HORIZONTAL COORDINATES ARE U.S. SURVEY FEET REFERRED TO NORTH AMERICAN DATUM 1983 (NAD83) OHIO STATE PLANE COORDINATE SYSTEM – NORTH ZONE.

3.PROJECT DEPTH IS AS NOTED BELOW LOW WATER DATUM.

4.SOUNDINGS WERE TAKEN BY THE BUFFALO DISTRICT ARMY CORPS OF ENGINEERS BY C. STRONG AND PARTY ON JULY 20 THRU SEPTEMBER 28, 2015:

GPS POSITIONING, POS–MV VER. 5 AND RTK TIDES
SONAR HEAD: 200 KHZ, R2 SONIC 2024 MULTIBEAM
1.0 DEGREE BEAMS 150 DEGREE ARC
HEAVE PITCH AND ROLL; APPLANIX POS–MV VER. 5
VELOCITY PROFILER; SONTEK CASTAWAY CTD
HYPACK SURVEY SOFTWARE
SURVEY VESSEL MONSON

5.THE SOUNDING INFORMATION DEPICTED ON THE MAP REPRESENTS THE RESULTS OF SURVEYS MADE ON THE DATE INDICATED AND CAN ONLY BE CONSIDERED AS INDICATING THE GENERAL CONDITION AT THAT TIME.

6.THE BACKGROUND IMAGERY SHOWN WAS ACQUIRED FROM THE OHIO GEOGRAPHICALLY REFERENCED INFORMATION PROGRAM.

7.THIS SURVEY WAS PREPARED IN ACCORDANCE WITH THE STANDARDS OUTLINED IN CORPS OF ENGINEERS HYDROGRAPHIC SURVEY MANUAL EM 1110–2–1003.

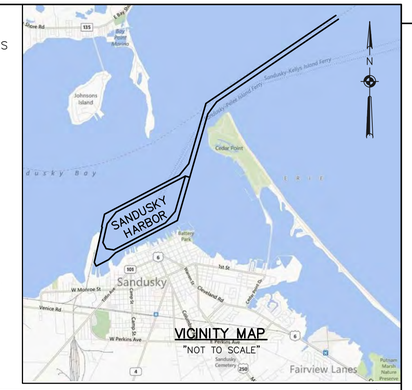

VICINITY MAP
"NOT TO SCALE"

CHANNEL CORNER COORDINATES		
POINT	NORTHING	EASTING
402	664505.57	1915360.46
406	663457.19	1914565.51
434	663575.30	1914183.34
436	664383.21	1914433.07

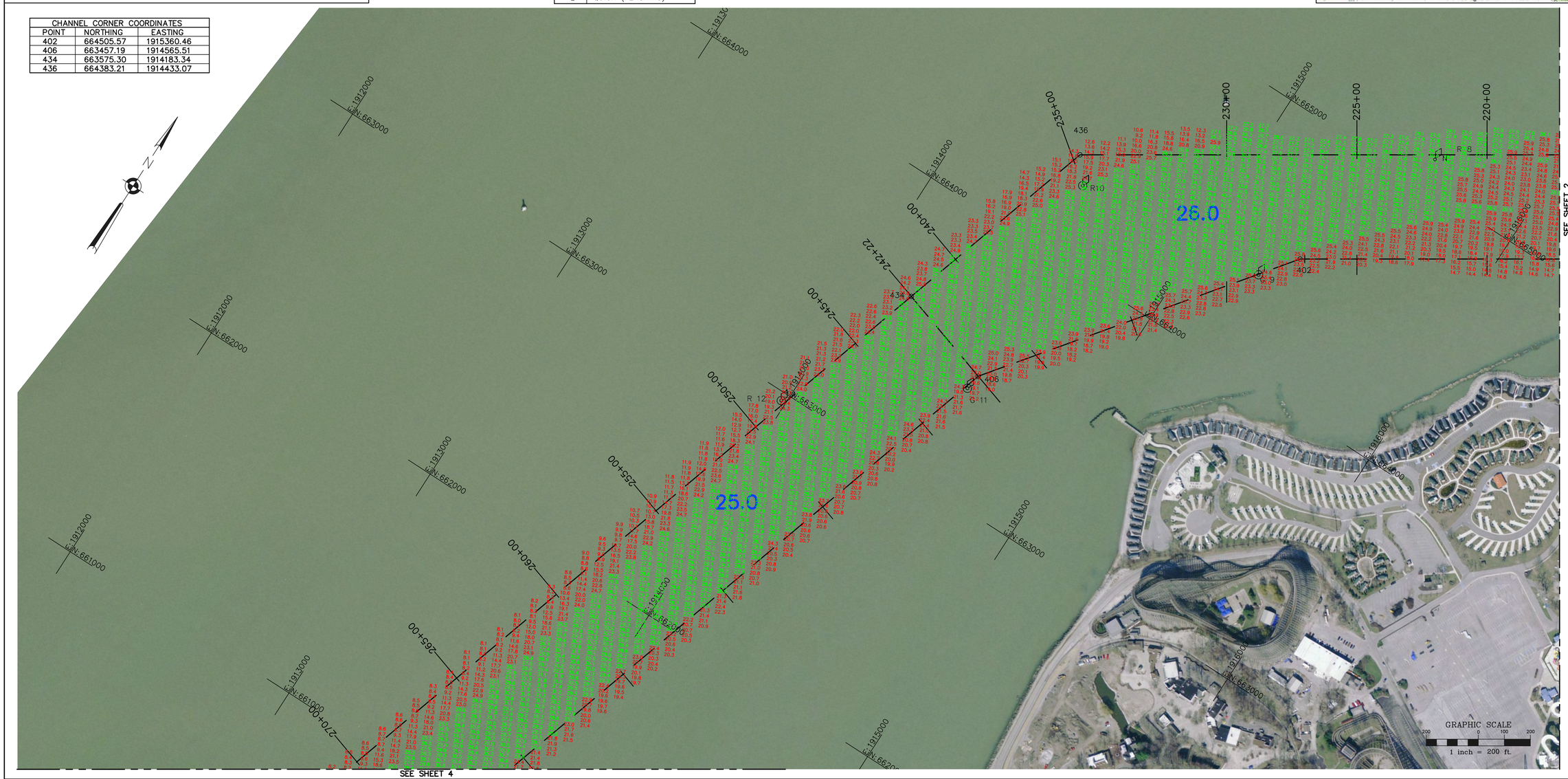

US Army Corps of Engineers
Buffalo District

REVISION NOTES	
PURPOSE	DATE

Original sheet size = ANSI D

** COPY OF ** SIGNED ORIGINAL

Drawn by: ACK
Checked by: KPL
Reviewed by: Roman H. Figlar III PLS
Chief, Survey Section
Approved: Edward F. Gawarecki
Chief, NY–PA O & M Office

U.S. ARMY ENGINEER DISTRICT
CORPS OF ENGINEERS
BUFFALO, NEW YORK 14207–3199

To download an electronic version of this map, paste a web browser to http://www.lrb.usace.army.mil/WhoWeAre/NoticeMgmt/Surveys/surveyhtml

SANDUSKY, OHIO
SANDUSKY HARBOR
PROJECT CONDITION SOUNDINGS 2015
SCALE: 1" = 200'

Sheet reference number
VH–103
Sheet 3 of 7

D:\Survey Drive Projects\OH–Sandusky Harbor\Channel Maintenance\Drawing Files (Cad)\2015\san15vh7.dwg

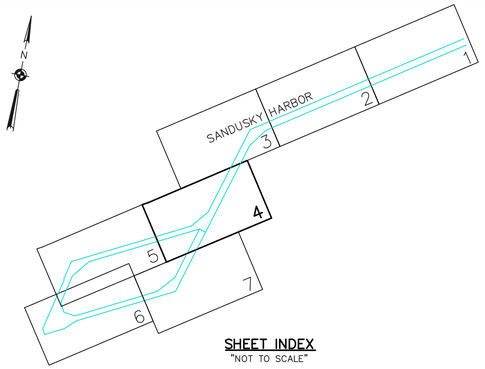

SHEET INDEX
"NOT TO SCALE"

SOUNDING COLOR LEGEND	
	DEPTHS 0.1' OR MORE ABOVE PROJECT DEPTH
	DEPTHS AT OR BELOW PROJECT DEPTH
21.0	PROJECT DEPTH

LEGEND OF SYMBOLS	
17+00	CHANNEL STATIONING
417	CHANNEL CORNER
H.L.F.	HARBOR LINE CORNER
	FEDERAL CHANNEL
	HARBOR LINE
	SUBMARINE CABLE
c	CAN BUOY
N	NUN BUOY
	LIGHTED BUOY
	FIXED LIGHT
	LIGHT HOUSE
W	LIGHT COLOR WHITE
R	LIGHT COLOR RED
G	LIGHT COLOR GREEN
FL	FLASHING LIGHT
F	FIXED LIGHT
Oc	OCCULTING LIGHT
Iso	EQUAL INTERVAL
AL	ALTERNATING
Q	QUICK (FLASHING)

SITE SPECIFIC NOTES

1.PROJECT DEPTHS AND SOUNDINGS ARE U.S. SURVEY FEET REFERRED TO LOW WATER DATUM OF 569.2 FEET ABOVE INTERNATIONAL GREAT LAKES DATUM 1985 (IGLD85).

2.HORIZONTAL COORDINATES ARE U.S. SURVEY FEET REFERRED TO NORTH AMERICAN DATUM 1983 (NAD83) OHIO STATE PLANE COORDINATE SYSTEM – NORTH ZONE.

3.PROJECT DEPTH IS AS NOTED BELOW LOW WATER DATUM.

4.SOUNDINGS WERE TAKEN BY THE BUFFALO DISTRICT ARMY CORPS OF ENGINEERS BY C. STRONG AND PARTY ON JULY 20 THRU SEPTEMBER 28, 2015:

GPS POSITIONING, POS–MV VER. 5 AND RTK TIDES
SONAR HEAD: 200 KHZ, R2 SONIC 2024 MULTIBEAM
1.0 DEGREE BEAMS 150 DEGREE ARC
HEAVE PITCH AND ROLL; APPLANIX POS–MV VER. 5
VELOCITY PROFILER; SONTEK CASTAWAY CTD
HYPACK SURVEY SOFTWARE
SURVEY VESSEL MONSON

5.THE SOUNDING INFORMATION DEPICTED ON THE MAP REPRESENTS THE RESULTS OF SURVEYS MADE ON THE DATE INDICATED AND CAN ONLY BE CONSIDERED AS INDICATING THE GENERAL CONDITION AT THAT TIME.

6.THE BACKGROUND IMAGERY SHOWN WAS ACQUIRED FROM THE OHIO GEOGRAPHICALLY REFERENCED INFORMATION PROGRAM.

7.THIS SURVEY WAS PREPARED IN ACCORDANCE WITH THE STANDARDS OUTLINED IN CORPS OF ENGINEERS HYDROGRAPHIC SURVEY MANUAL EM 1110–2–1003.

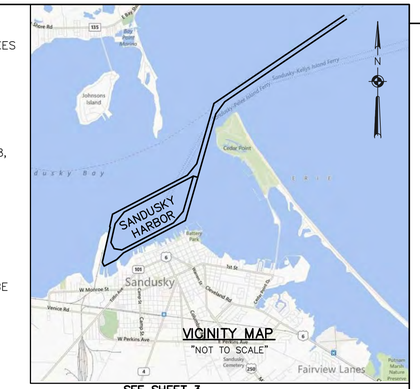

VICINITY MAP
"NOT TO SCALE"

SEE SHEET 3

CHANNEL CORNER COORDINATES		
POINT	NORTHING	EASTING
401	658152.27	1912507.47
408	659097.70	1913218.00
410	658395.54	1913000.97
430	658237.63	1912001.10
432	659215.69	1912835.80

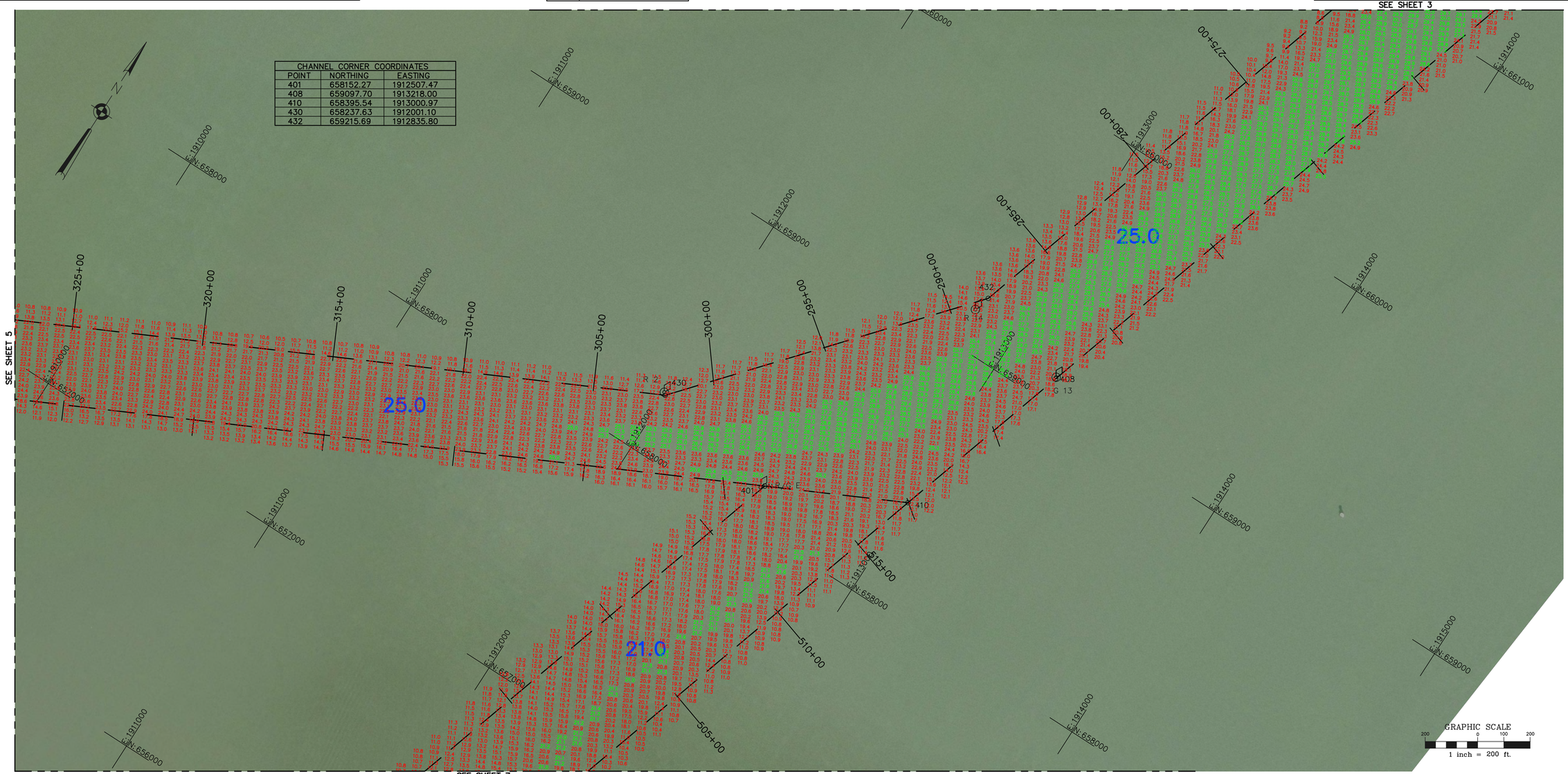

US Army Corps of Engineers
Buffalo District

REVISION NOTES	
PURPOSE	DATE
UPDATED TO SHOW AFTER CONTRACT SOUNDINGS	2014-12-16

Original sheet size = ANSI D

** COPY OF ** SIGNED ORIGINAL

Drawn by: ACK
Checked by: KPL
Reviewed by: Roman H. Figlar III PLS
Chief, Survey Section
Approved: Edward F. Gawarecki
Chief, NY-PA Q & M Office

U.S. ARMY ENGINEER DISTRICT
CORPS OF ENGINEERS
BUFFALO, NEW YORK 14207–3199

SANDUSKY, OHIO
SANDUSKY HARBOR
PROJECT CONDITION SOUNDINGS 2015
SCALE: 1" = 200'

Sheet reference number
VH–104
Sheet 4 of 7

To download an electronic version of this map, paint a web browser to http://www.lrb.usace.army.mil/WhoWeAre/NoteMgmt/Survey/Surveyhtml

D:\Survey Drive Projects\OH-Sandusky Harbor\Channel Maintenance\Drawing Files (Cad)\2015\san15vh7.dwg

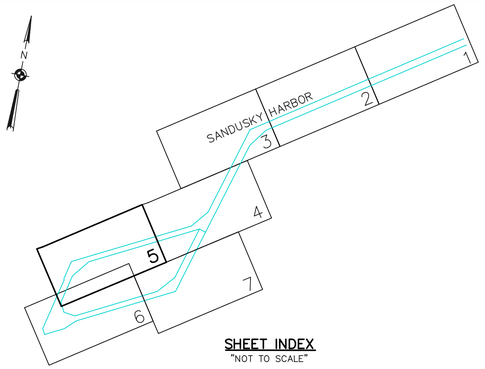

SHEET INDEX
"NOT TO SCALE"

SOUNDING COLOR LEGEND

	DEPTHS 0.1' OR MORE ABOVE PROJECT DEPTH
	DEPTHS AT OR BELOW PROJECT DEPTH
21.0	PROJECT DEPTH

LEGEND OF SYMBOLS

17+00	CHANNEL STATIONING
417	CHANNEL CORNER
H.L.F.	HARBOR LINE CORNER
	FEDERAL CHANNEL
	HARBOR LINE
	SUBMARINE CABLE
c	CAN BUOY
N	NUN BUOY
	LIGHTED BUOY
	FIXED LIGHT
	LIGHT HOUSE
W	LIGHT COLOR WHITE
R	LIGHT COLOR RED
G	LIGHT COLOR GREEN
FL	FLASHING LIGHT
F	FIXED LIGHT
Oc	OCCULTING LIGHT
Iso	EQUAL INTERVAL
AL	ALTERNATING
Q	QUICK (FLASHING)

SITE SPECIFIC NOTES

1.PROJECT DEPTHS AND SOUNDINGS ARE U.S. SURVEY FEET REFERRED TO LOW WATER DATUM OF 569.2 FEET ABOVE INTERNATIONAL GREAT LAKES DATUM 1985 (IGLD85).

2.HORIZONTAL COORDINATES ARE U.S. SURVEY FEET REFERRED TO NORTH AMERICAN DATUM 1983 (NAD83) OHIO STATE PLANE COORDINATE SYSTEM – NORTH ZONE.

3.PROJECT DEPTH IS AS NOTED BELOW LOW WATER DATUM.

4.SOUNDINGS WERE TAKEN BY THE BUFFALO DISTRICT ARMY CORPS OF ENGINEERS BY C. STRONG AND PARTY ON JULY 20 THRU SEPTEMBER 28, 2015:

GPS POSITIONING, POS–MV VER. 5 AND RTK TIDES
SONAR HEAD: 200 KHZ, R2 SONIC 2024 MULTIBEAM
1.0 DEGREE BEAMS 150 DEGREE ARC
HEAVE PITCH AND ROLL; APPLANIX POS–MV VER. 5
VELOCITY PROFILER; SONTEK CASTAWAY CTD
HYPACK SURVEY SOFTWARE
SURVEY VESSEL MONSON

5.THE SOUNDING INFORMATION DEPICTED ON THE MAP REPRESENTS THE RESULTS OF SURVEYS MADE ON THE DATE INDICATED AND CAN ONLY BE CONSIDERED AS INDICATING THE GENERAL CONDITION AT THAT TIME.

6.THE BACKGROUND IMAGERY SHOWN WAS ACQUIRED FROM THE OHIO GEOGRAPHICALLY REFERENCED INFORMATION PROGRAM.

7.THIS SURVEY WAS PREPARED IN ACCORDANCE WITH THE STANDARDS OUTLINED IN CORPS OF ENGINEERS HYDROGRAPHIC SURVEY MANUAL EM 1110–2–1003.

VICINITY MAP
"NOT TO SCALE"

CHANNEL CORNER COORDINATES		
POINT	NORTHING	EASTING
413	654185.98	1905662.97
415	655174.53	1906461.32
424	653885.44	1905226.63
426	653946.26	1905190.30
428	655015.23	1905458.18

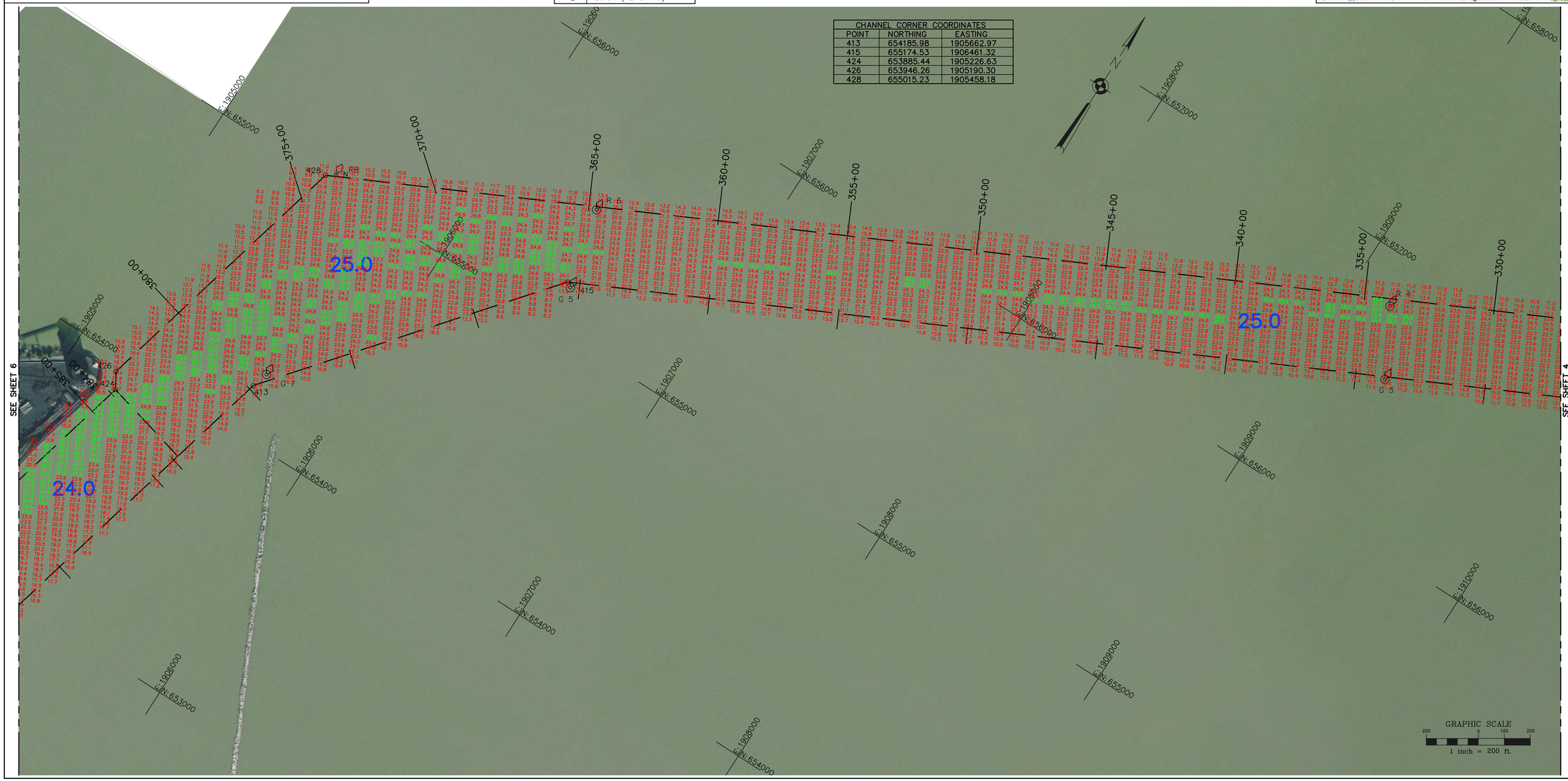

US Army Corps of Engineers
Buffalo District

REVISION NOTES	
PURPOSE	DATE
UPDATED TO SHOW AFTER CONTRACT SOUNDINGS	2014-12-17

Original sheet size = ANSI D

** COPY OF ** SIGNED ORIGINAL

Drawn by: ACK
Checked by: KPL
Reviewed by: Roman H. Figlan III PLS
Chief, Survey Section
Approved: Edward F. Gawarecki
Chief, NY-PA O & M Office

U.S. ARMY ENGINEER DISTRICT
CORPS OF ENGINEERS
BUFFALO, NEW YORK 14207–3199

To download an electronic version of this map, paste a web browser to http://www.lrb.usace.army.mil/WhoWeAre/NoteMgmt/survey/surveyhtml

SANDUSKY, OHIO
SANDUSKY HARBOR
PROJECT CONDITION SOUNDINGS 2015
SCALE: 1" = 200'

Sheet reference number
VH–105

Sheet 5 of 7

D:\Survey Drive Projects\OH-Sandusky Harbor\Channel Maintenance\Drawing Files (Cad)\2015\san15vh7.dwg

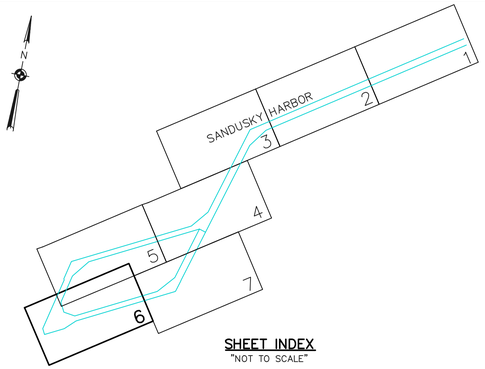

SHEET INDEX
"NOT TO SCALE"

SOUNDING COLOR LEGEND	
	DEPTHS 0.1' OR MORE ABOVE PROJECT DEPTH
	DEPTHS AT OR BELOW PROJECT DEPTH
21.0	PROJECT DEPTH

LEGEND OF SYMBOLS	
17+00	CHANNEL STATIONING
417	CHANNEL CORNER
H.L.F.	HARBOR LINE CORNER
	FEDERAL CHANNEL
	HARBOR LINE
	SUBMARINE CABLE
c	CAN BUOY
N	NUN BUOY
	LIGHTED BUOY
	FIXED LIGHT
	LIGHT HOUSE
W	LIGHT COLOR WHITE
R	LIGHT COLOR RED
G	LIGHT COLOR GREEN
FL	FLASHING LIGHT
F	FIXED LIGHT
Oc	OCCULTING LIGHT
Iso	EQUAL INTERVAL
AL	ALTERNATING
Q	QUICK (FLASHING)

SITE SPECIFIC NOTES

1.PROJECT DEPTHS AND SOUNDINGS ARE U.S. SURVEY FEET REFERRED TO LOW WATER DATUM OF 569.2 FEET ABOVE INTERNATIONAL GREAT LAKES DATUM 1985 (IGLD85).

2.HORIZONTAL COORDINATES ARE U.S. SURVEY FEET REFERRED TO NORTH AMERICAN DATUM 1983 (NAD83) OHIO STATE PLANE COORDINATE SYSTEM – NORTH ZONE.

3.PROJECT DEPTH IS AS NOTED BELOW LOW WATER DATUM.

4.SOUNDINGS WERE TAKEN BY THE BUFFALO DISTRICT ARMY CORPS OF ENGINEERS BY C. STRONG AND PARTY ON JULY 20 THRU SEPTEMBER 28, 2015:

GPS POSITIONING, POS–MV VER. 5 AND RTK TIDES
SONAR HEAD: 200 KHZ, R2 SONIC 2024 MULTIBEAM
1.0 DEGREE BEAMS 150 DEGREE ARC
HEAVE PITCH AND ROLL; APPLANIX POS–MV VER. 5
VELOCITY PROFILER; SONTEK CASTAWAY CTD
HYPACK SURVEY SOFTWARE
SURVEY VESSEL MONSON

5.THE SOUNDING INFORMATION DEPICTED ON THE MAP REPRESENTS THE RESULTS OF SURVEYS MADE ON THE DATE INDICATED AND CAN ONLY BE CONSIDERED AS INDICATING THE GENERAL CONDITION AT THAT TIME.

6.THE BACKGROUND IMAGERY SHOWN WAS ACQUIRED FROM THE OHIO GEOGRAPHICALLY REFERENCED INFORMATION PROGRAM.

7.THIS SURVEY WAS PREPARED IN ACCORDANCE WITH THE STANDARDS OUTLINED IN CORPS OF ENGINEERS HYDROGRAPHIC SURVEY MANUAL EM 1110–2–1003.

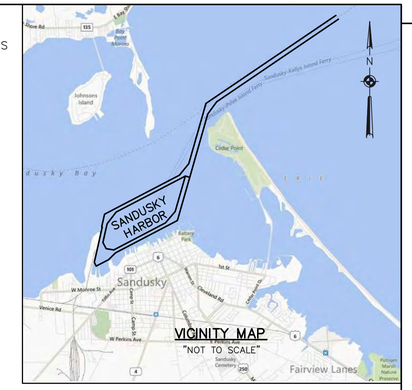

VICINITY MAP
"NOT TO SCALE"

CHANNEL CORNER COORDINATES		
POINT	NORTHING	EASTING
407	651910.91	1906188.21
409	652026.07	1905523.39
411	652566.30	1905257.08
414	651642.18	1906320.89
416	651077.24	1905708.98
418	650544.66	1904632.52
420	650870.79	1904471.16
422	651407.16	1904605.57

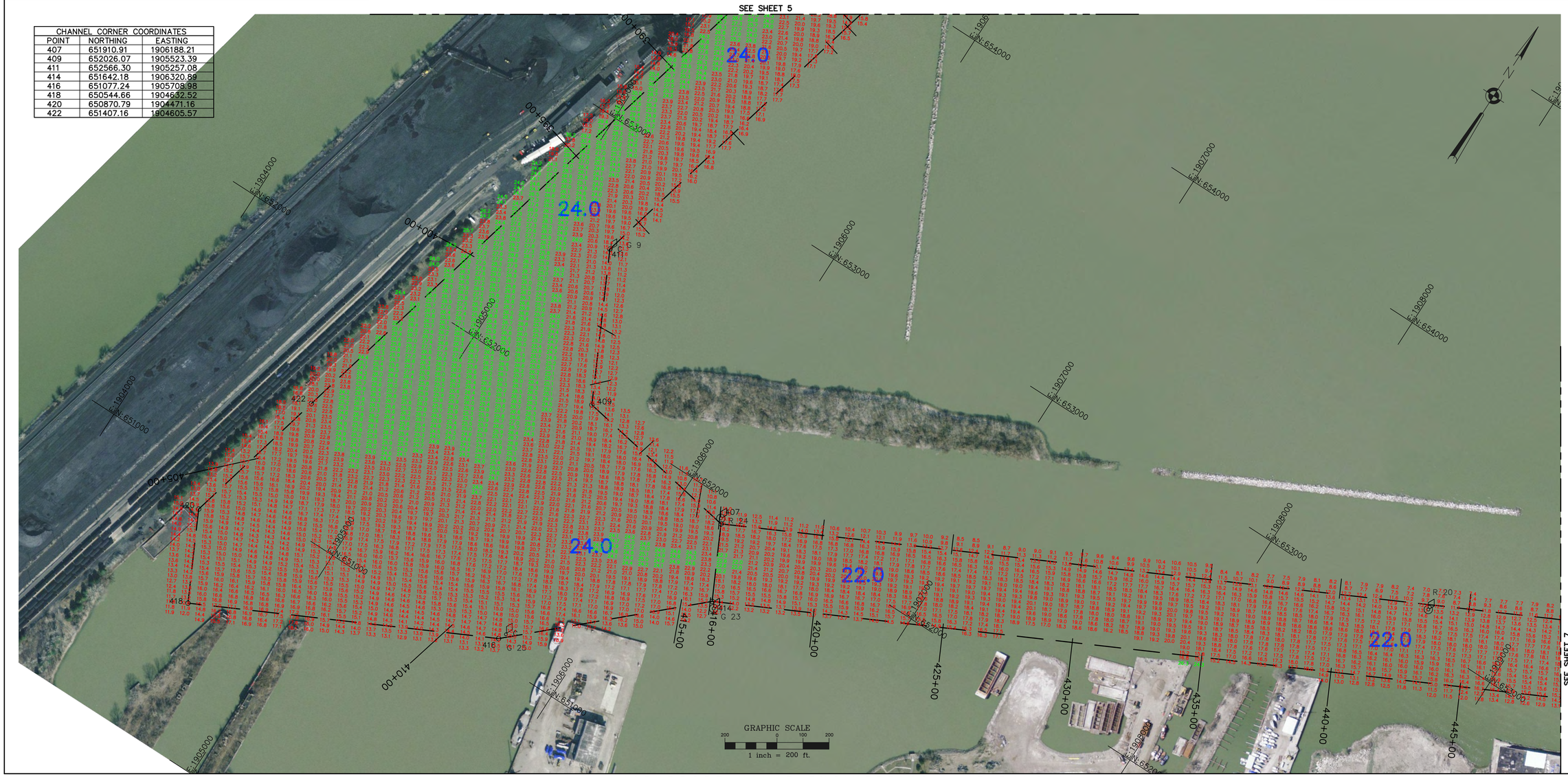

US Army Corps of Engineers
Buffalo District

REVISION NOTES	
PURPOSE	DATE

** COPY OF ** SIGNED ORIGINAL

Drawn by: ACK
Checked by: KPL
Reviewed by: Roman H. Figlan III PLS
Chief, Survey Section
Approved: Edward F. Gawarecki
Chief, NY–PA O & M Office

U.S. ARMY ENGINEER DISTRICT
CORPS OF ENGINEERS
BUFFALO, NEW YORK 14207–3199

SANDUSKY, OHIO
SANDUSKY HARBOR
PROJECT CONDITION SOUNDINGS 2015
SCALE: 1" = 200'

Sheet reference number
VH–106
Sheet 6 of 7

Original sheet size = ANSI D

To download an electronic version of this map, point a web browser to http://www.lrb.usace.army.mil/WhoWeAre/NoterMgmt/survey/surveyhtml

D:\Survey Drive Projects\OH–Sandusky Harbor\Channel Maintenance\Drawing Files (Cad)\2015\san15vh7.dwg

SAFETY PAYS

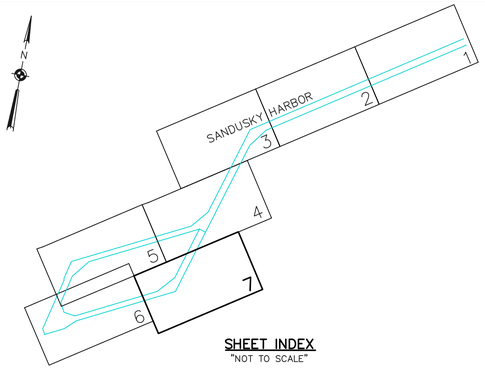

SHEET INDEX
"NOT TO SCALE"

SOUNDING COLOR LEGEND

	DEPTHS 0.1' OR MORE ABOVE PROJECT DEPTH
	DEPTHS AT OR BELOW PROJECT DEPTH
21.0	PROJECT DEPTH

LEGEND OF SYMBOLS

17+00	CHANNEL STATIONING
417	CHANNEL CORNER
H.L.F.	HARBOR LINE CORNER
	FEDERAL CHANNEL
	HARBOR LINE
	SUBMARINE CABLE
C	CAN BUOY
N	NUN BUOY
	LIGHTED BUOY
	FIXED LIGHT
	LIGHT HOUSE
W	LIGHT COLOR WHITE
R	LIGHT COLOR RED
G	LIGHT COLOR GREEN
FL	FLASHING LIGHT
F	FIXED LIGHT
Oc	OCCULTING LIGHT
Iso	EQUAL INTERVAL
AL	ALTERNATING
Q	QUICK (FLASHING)

SITE SPECIFIC NOTES

1.PROJECT DEPTHS AND SOUNDINGS ARE U.S. SURVEY FEET REFERRED TO LOW WATER DATUM OF 569.2 FEET ABOVE INTERNATIONAL GREAT LAKES DATUM 1985 (IGLD85).

2.HORIZONTAL COORDINATES ARE U.S. SURVEY FEET REFERRED TO NORTH AMERICAN DATUM 1983 (NAD83) OHIO STATE PLANE COORDINATE SYSTEM – NORTH ZONE.

3.PROJECT DEPTH IS AS NOTED BELOW LOW WATER DATUM.

4.SOUNDINGS WERE TAKEN BY THE BUFFALO DISTRICT ARMY CORPS OF ENGINEERS BY C. STRONG AND PARTY ON JULY 20 THRU SEPTEMBER 28, 2015:
GPS POSITIONING, POS–MV VER. 5 AND RTK TIDES
SONAR HEAD: 200 KHZ, R2 SONIC 2024 MULTIBEAM
1.0 DEGREE BEAMS 150 DEGREE ARC
HEAVE PITCH AND ROLL; APPLANIX POS–MV VER. 5
VELOCITY PROFILER; SONTEK CASTAWAY CTD
HYPACK SURVEY SOFTWARE
SURVEY VESSEL MONSON

5.THE SOUNDING INFORMATION DEPICTED ON THE MAP REPRESENTS THE RESULTS OF SURVEYS MADE ON THE DATE INDICATED AND CAN ONLY BE CONSIDERED AS INDICATING THE GENERAL CONDITION AT THAT TIME.

6.THE BACKGROUND IMAGERY SHOWN WAS ACQUIRED FROM THE OHIO GEOGRAPHICALLY REFERENCED INFORMATION PROGRAM.

7.THIS SURVEY WAS PREPARED IN ACCORDANCE WITH THE STANDARDS OUTLINED IN CORPS OF ENGINEERS HYDROGRAPHIC SURVEY MANUAL EM 1110–2–1003.

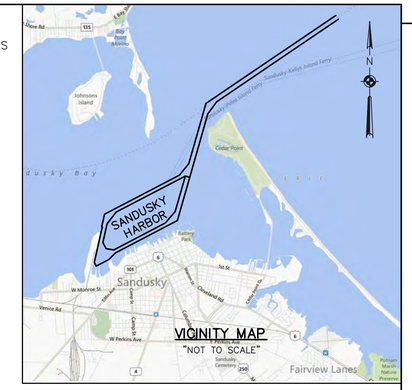

VICINITY MAP
"NOT TO SCALE"

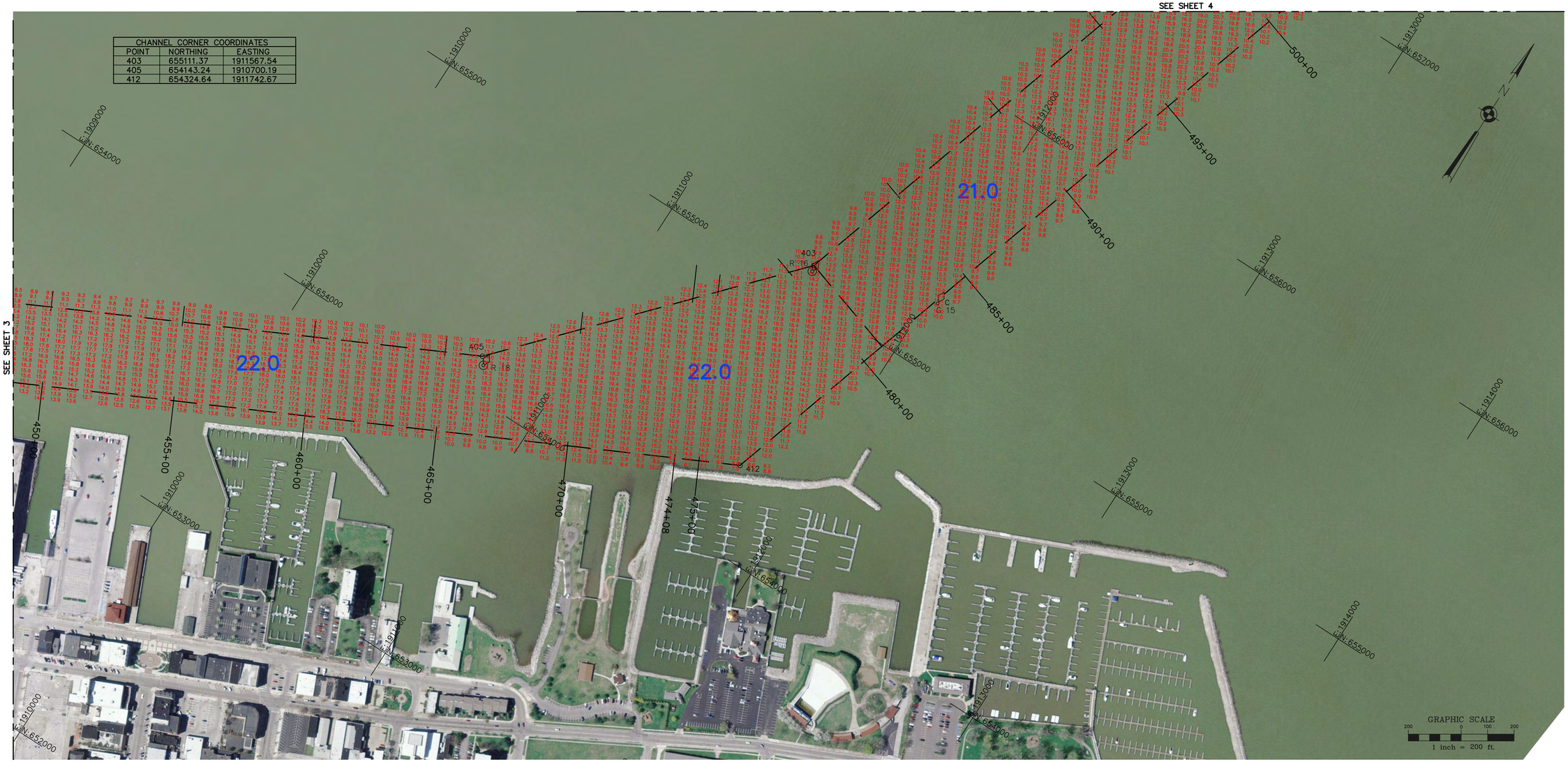

CHANNEL CORNER COORDINATES		
POINT	NORTHING	EASTING
403	655111.37	1911567.54
405	654143.24	1910700.19
412	654324.64	1911742.67

US Army Corps of Engineers
Buffalo District

REVISION NOTES

PURPOSE	DATE

** COPY OF ** SIGNED ORIGINAL

Drawn by: ACK
Checked by: KPL
Reviewed by: Roman H. Figler III PLS
Chief, Survey Section
Approved: Edward F. Gawarecki
Chief, NY–PA O & M Office

U.S. ARMY ENGINEER DISTRICT
CORPS OF ENGINEERS
BUFFALO, NEW YORK 14207–3199

To download an electronic version of this map, point a web browser to http://www.lrb.usace.army.mil/WhoWeAre/WaterMgmt/survey/survey.html

Original sheet size = ANSI D

SANDUSKY, OHIO
SANDUSKY HARBOR
PROJECT CONDITION SOUNDINGS 2015

SCALE: 1" = 200'

Sheet reference number
VH–107

Sheet 7 of 7

D:\Survey Drive Projects\OH–Sandusky Harbor\Channel Maintenance\Drawing Files (Cad)\2015\san15vh7.dwg

SUPPORT VALUE ENGINEERING – IT PAYS