APPENDIX B-12

DELINEATION SURVEYS FOR AREA 15

IDM Environmental
Bldg. 14, Praxair Site
Tonawanda, NY 14151
Radiological Survey Form

HILBERT ASSOCIATES INC
RADIOLOGICAL ENGINEERS

Hilbert Associates, Inc
Radiological Consultants
640 Maple Ave
Saratoga Springs, NY 12866
Phone: 518-584-0166
Fax: 518-584-8529
Contract # 95012

Time 4-1-97	Tech M. Bigo	Instruments / sn Ludlum 2221 D
on / Purpose AREA 15A / SPOT Delineation.		Survey # 212 RWP # N/A
		EFF. -22 / 15.5 cm² Probe B γ

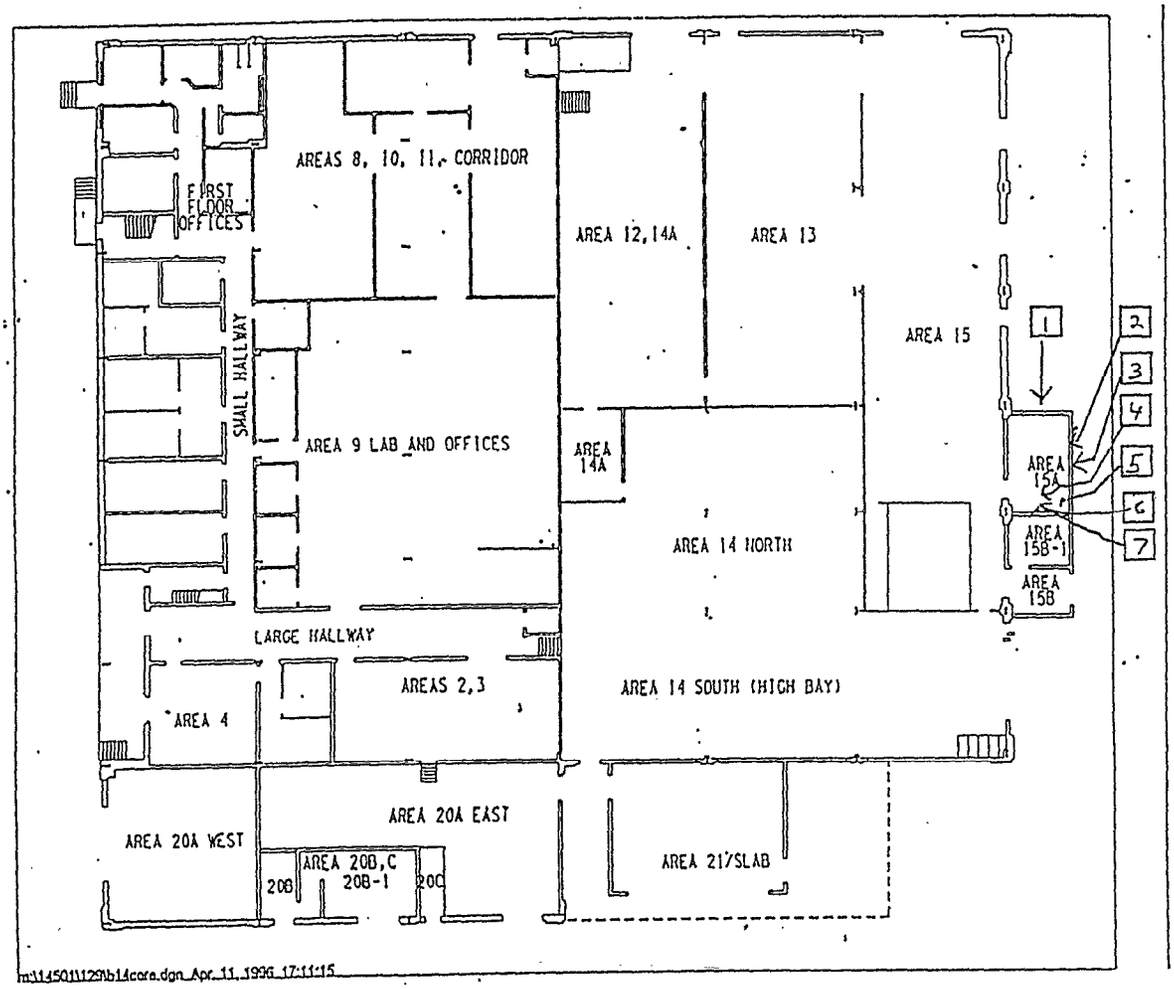

Loc	Type	Description	Gross	A DPM	Gross	Beta DPM /100 cm²	Loc	Type	Description	Gross	A DPM	Gross	Beta DPM
1	D.P.	North Block wall			80	2345							
2	D.P.	Window Ledge		N	90	2639							
3	D.P.	East Block wall			90	2639				N			
4	D.P	Tile Floor		A	80	2345							
5	D.P.	Heater			80	2345					A		
6	D.P.	Block wall			50	1466							
7	D.P.	Brick wall South			80	2345							

Comments: = Direct Probe Locations.

Scaler S/N		BKD	EFF	MDA
CT =	Alpha:			
Tech	Beta:			

Review

HILBERT ASSOCIATES INC
RADIOLOGICAL ENGINEERS

IDM Environmental
Bldg. 14, Praxair Site
Tonawanda, NY 14151

Radiological Survey Form

Hilbert Associates, Inc
Radiological Consultants
640 Maple Ave
Saratoga Springs, NY 12866
Phone: 518-584-0166
Fax: 518-584-8529
Contract # 95012

Date / Time 4-10-97 1600	Tech W.	Instruments / sn (I) 2929 # 91234	
Location / Purpose PRAXAIR BLDG. #14		Survey # 267	RWP # N/A
AREAS 14 & 15			

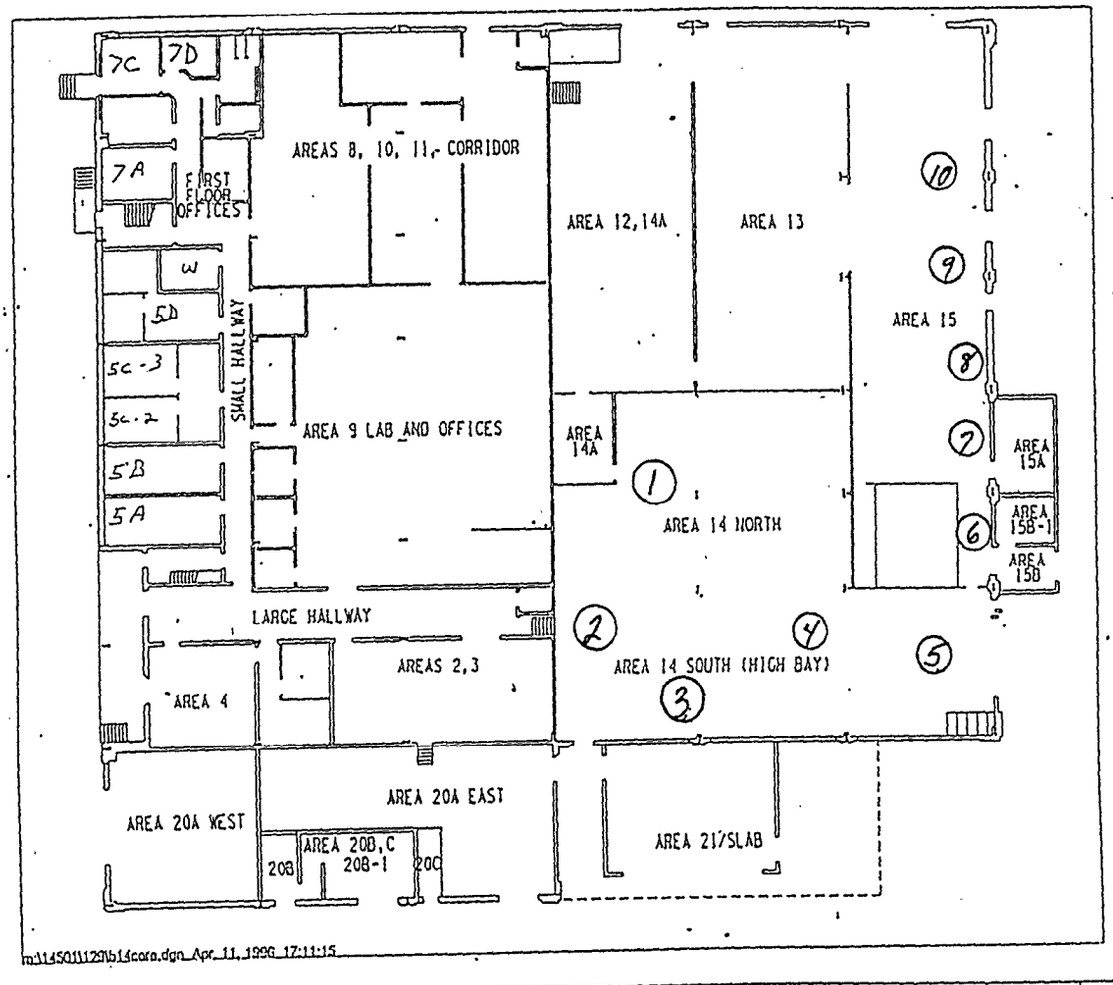

Loc	Type	Description	Gross	A DPM	Gross	Beta DPM	Loc	Type	Description	Gross	A DPM	Gross	Beta DP
1	S	FLOOR AREA 14	1	2	52	-28	8	S	FLOOR AREA 15	2	5	73	41
2			0	-1	61	0	9			0	-1	46	-52
3			1	2	75	48	10			1	2	69	28
4			0	-1	60	-3			N/A				
5			1	-2	69	28							
6		FLOOR AREA 15	2	5	71	35							
7			0	-1	53	-28							

Comments:

			BKD	EFF	MDA
Scaler S/N (I) 2929					
CT = 1 MIN.	Alpha:	187/700 = .26		.32	76
Tech W.	Beta:	4957/700 = 6.8		.29	135

Review

SURVEY # 355

HILBERT ASSOCIATES, INC.

DIRECT SURFACE MEASUREMENT ANALYSIS REPORT
(scaler measurement)

SAMPLE DATE: 5-19-97, 5-20-97
LOCATION: PRAXAIR SITE
AREA 15
FLOOR DELINEATION

RADIATION MEASUREMENT: Beta-Gamma
RESULTS REPORTED UNITS: dpm per 100cm2
MEASUREMENT TYPE: direct scaler measurements

TOTAL BACKGROUND COUNTS	900
BACKGROUND COUNT TIME (MIN)	1 min.
SAMPLE COUNT TIME (MIN)	1 min.

FLOOR HOT SPOTS W/44-9 | βγ GROSS CPM W/15.5 cm²

SAMPLE #	LOCATION CODE	LOCATION DESCRIPTION	GROSS SAMPLE COUNTS
1	SEE MAP	STEEL BOLT (CUT)	4,167
2		FLOOR ANCHOR	1,123
3		FLOOR CONCRETE	3,279
4		FLOOR CRACK	1085
5			
6			
7		* 1 MIN. COUNT βγ	
8		W/INST. (B) L2221 W/44-9	
9		BKGD. = 45 CPM	
10		EFF. = .20	
11			
12		⊕ = DIRECT PROBE	
13		MEASUREMENT	
14		LOCATION	
15			
16			
17			
18			
19			
20			
21			
22			
23			
24			
25			
26			
27			
28			
29		N	
30		A	
31			
32			
33			
34			
35			
36			
37			
38			
39			
40			

KEY: \\\ = NO ACCESS W/FLOOR MONITOR

DESIGNATED COLORS FOR GROSS CPM βγ, W/FLOOR MONITOR

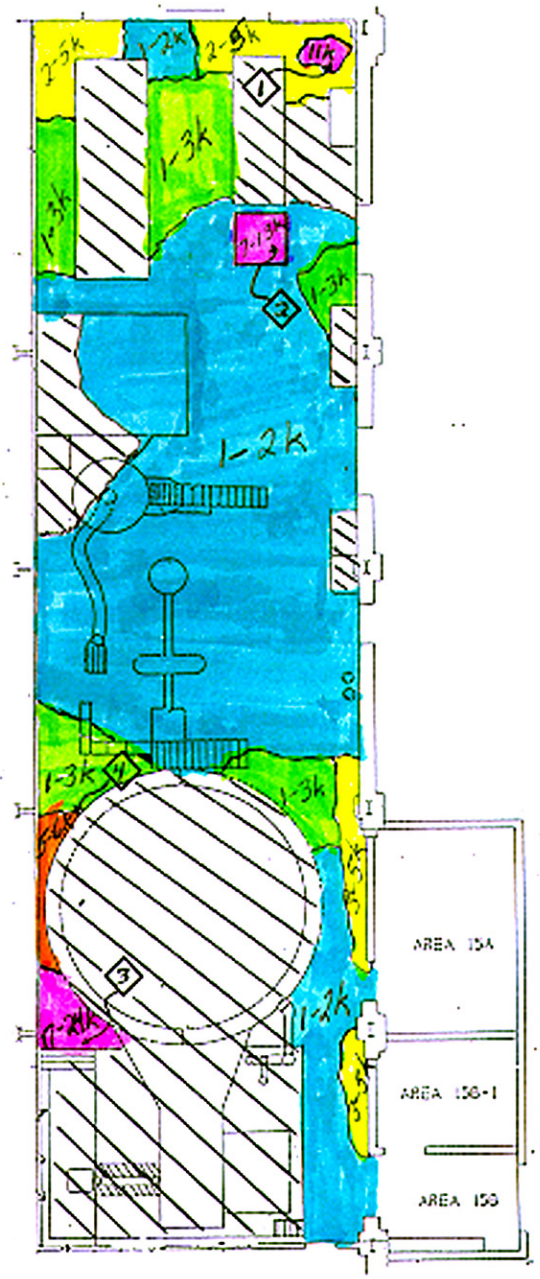

Instrument Model & s/n:	(J) L2221 W/43-37
Detector Model & s/n:	
Calibration Data:	
Efficiency	cpm / dpm based on 5/1/90 = .20
Detector Area	cm2 = 425

5-19-97
W. [signature]

ENCL-C2.XLS

REVIEW [signature]

SURVEY #356

HILBERT ASSOCIATES, INC.

DIRECT SURFACE MEASUREMENT ANALYSIS REPORT
(scaler measurement)

SAMPLE DATE: 5-20-97, 5-21-97
LOCATION: PRAXAIR SITE
AREA 15
FLOOR DELINEATION
(CRACKS & JOINTS)

RADIATION MEASUREMENT: Beta-Gamma
RESULTS REPORTED UNITS: dpm per 100cm2
MEASUREMENT TYPE: direct scaler measurements

TOTAL BACKGROUND COUNTS	45
BACKGROUND COUNT TIME (MIN)	1 MIN.
SAMPLE COUNT TIME (MIN)	1 MIN.

SAMPLE #	LOCATION CODE	FLOOR LOCATION DESCRIPTION	βγ GROSS CPM GROSS SAMPLE COUNTS
1	SEE MAP	EXP. JOINT	197
2		CRACK	188
3		CRACK	69
4		EXP. JOINT	99
5		EXP. JOINT & CRACK	127
6		EXP. JOINT	72
7		EXP. JOINT	91
8		CRACK	87
9		JOINT	153
10		JOINT	58
11		EXP. JOINT	936
12		JOINT	67
13		CRACK	84
14		CRACK	128
15		JOINT	23
16		JOINT	61
17		JOINT	78
18		CRACK	59
19		JOINT	65
20		CRACK	82
21		CRACK	73
22		JOINT	62
23		CRACK	58
24		CRACK	71
25		CRACK	65
26		JOINT	63
27		CRACK	52
28		JOINT	59
29		CRACK	57
30		JOINT	68
31		CRACK	71
32		JOINT	84
33		JOINT	102
34		JOINT	76
35		JOINT	121
36		JOINT	98
37		CRACK	85
38		JOINT	607
39		CRACK	123
40		CRACK	862

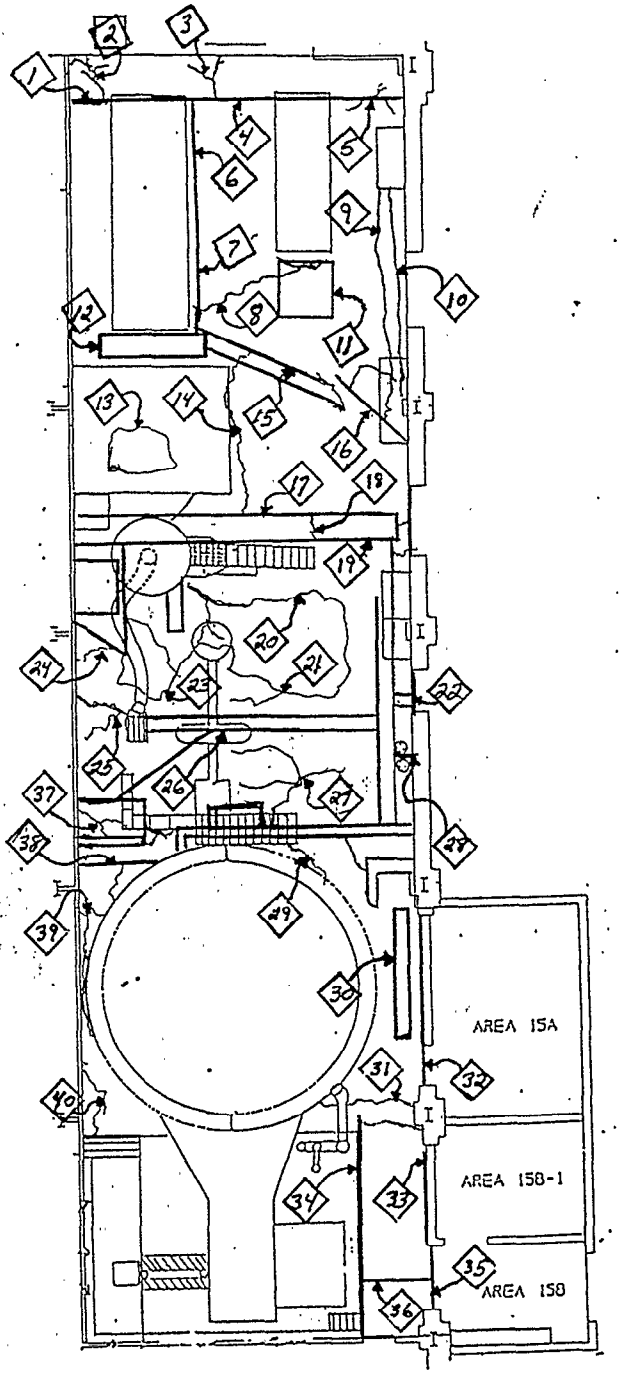

KEY:

(#) = LOCATION OF βγ 1min. READING IN GROSS CPM.

5-20-97
W.

Instrument Model & s/n:	INST. (B) L2221 #44-9
Detector Model & s/n:	
Calibration Date:	
Efficiency	cpm / dpm based on S/Y90 = .20
Detector Area	cm2 = 15.5

REVIEW

ENCL-C2.XLS

HILBERT ASSOCIATES, INC.
SURVEY # 370
C. HALLAM/[illegible]
SAMPLE DATE: 5-22-97
LOCATION: PRAXAIR SITE
B14 AREA 15
CORE DRILLING

DIRECT SURFACE MEASUREMENT ANALYSIS REPORT
(scaler measurement)

RADIATION MEASUREMENT: Beta-Gamma
RESULTS REPORTED UNITS: dpm per 100cm2
MEASUREMENT TYPE: direct scaler measurements

TOTAL BACKGROUND COUNTS	56
BACKGROUND COUNT TIME (MIN)	1 MIN
SAMPLE COUNT TIME (MIN)	1 MIN/SCAN

SAMPLE #	LOCATION CODE	LOCATION DESCRIPTION	GROSS SAMPLE COUNTS
1	N6/E0	TOP OF CORE	700-3000 cpm
2		SIDE OF CORE (UPPER 1")	80-200 cpm
3		SIDE OF CORE (LOWER 1")	50-80 cpm
4		BOTTOM OF CORE	50-80 cpm
5			
6			
7			
8			
9			
10			
11			
12			
13			
14			
15			
16			
17			
18			
19			
20			
21			
22			
23			
24			
25			
26			
27			
28			
29			
30			
31			
32			
33			
34			
35			
36			
37			
38			
39			
40			

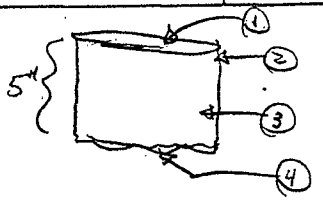

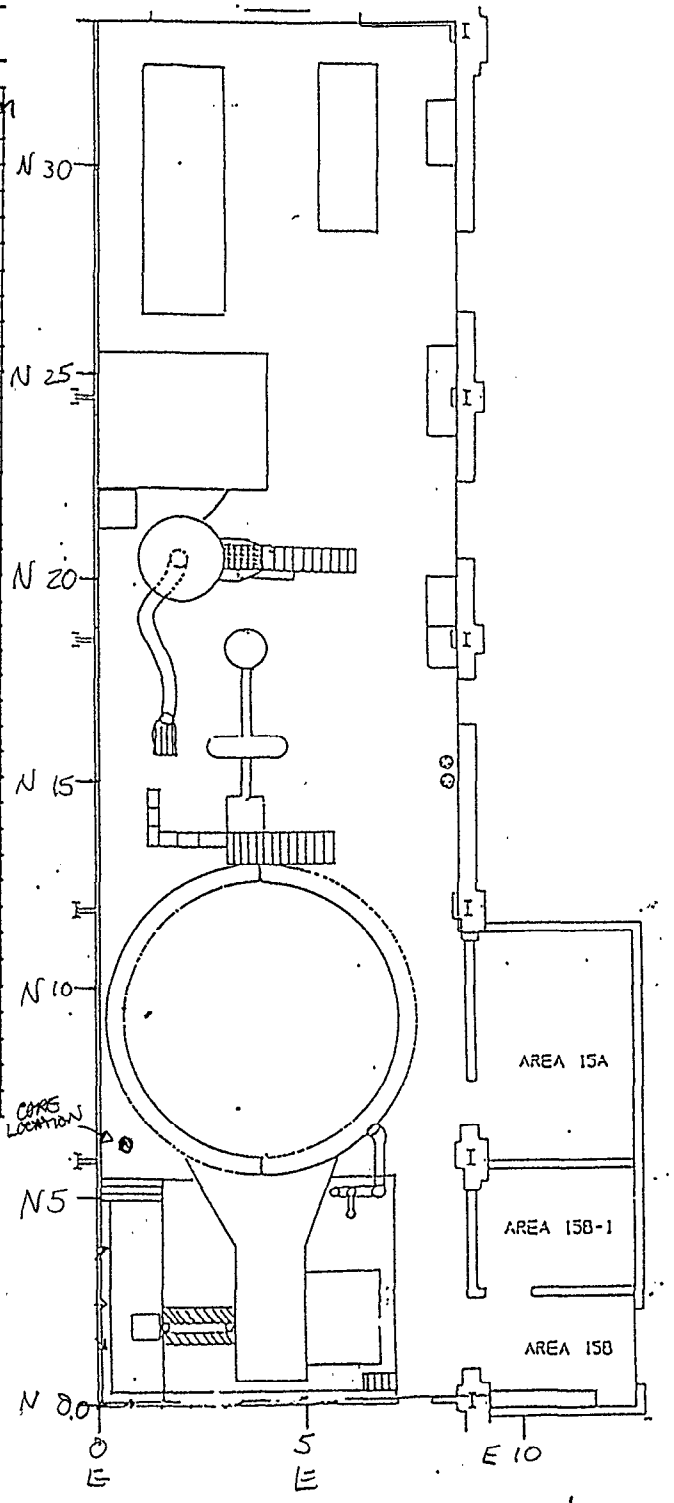

Instrument Model & s/n:	L2221/A
Detector Model & s/n:	
Calibration Date:	
Efficiency	0.25 cpm / dpm based on S/Y90
Detector Area	15.5 cm2

REVIEW [illegible]

ENCL-C2.XLS

HILBERT ASSOCIATES, INC.
SURVEY # 397
C. HALLAM / [illegible]
SAMPLE DATE: 5-27-97
LOCATION: PRAXAIR SITE
B14 AREA 15
CORE DRILLING

DIRECT SURFACE MEASUREMENT ANALYSIS REPORT
(scaler measurement)

RADIATION MEASUREMENT: Beta-Gamma
RESULTS REPORTED UNITS: dpm per 100cm2
MEASUREMENT TYPE: direct scaler measurements

TOTAL BACKGROUND COUNTS	58
BACKGROUND COUNT TIME (MIN)	1 MIN
SAMPLE COUNT TIME (MIN)	1 MIN / SCAN

SAMPLE #	LOCATION CODE	LOCATION DESCRIPTION	GROSS SAMPLE COUNTS
1	N10 E0	TOP OF CORE	90-110 cpm
2		SIDE OF CORE IN CRACK	80-270
3		OUTSIDE OF CORE	60-90 cpm
4		BOTTOM OF CORE	60-80
5		TOP OF CORE	90-120
6		SIDE/OUTSIDE OF CORE	50-80
7		SIDE OF CORE IN CRACK	90-240
8		BOTTOM OF CORE	70-150
9		BOTTOM OF CORE NEAR CRACK	100-220
10			
11			
12			
13			
14			
15			
16			
17			
18			
19			
20			
21			
22			
23			
24			
25			
26			
27			
28			
29			
30			
31			
32			
33			
34			
35			
36			
37			
38			
39			
40			

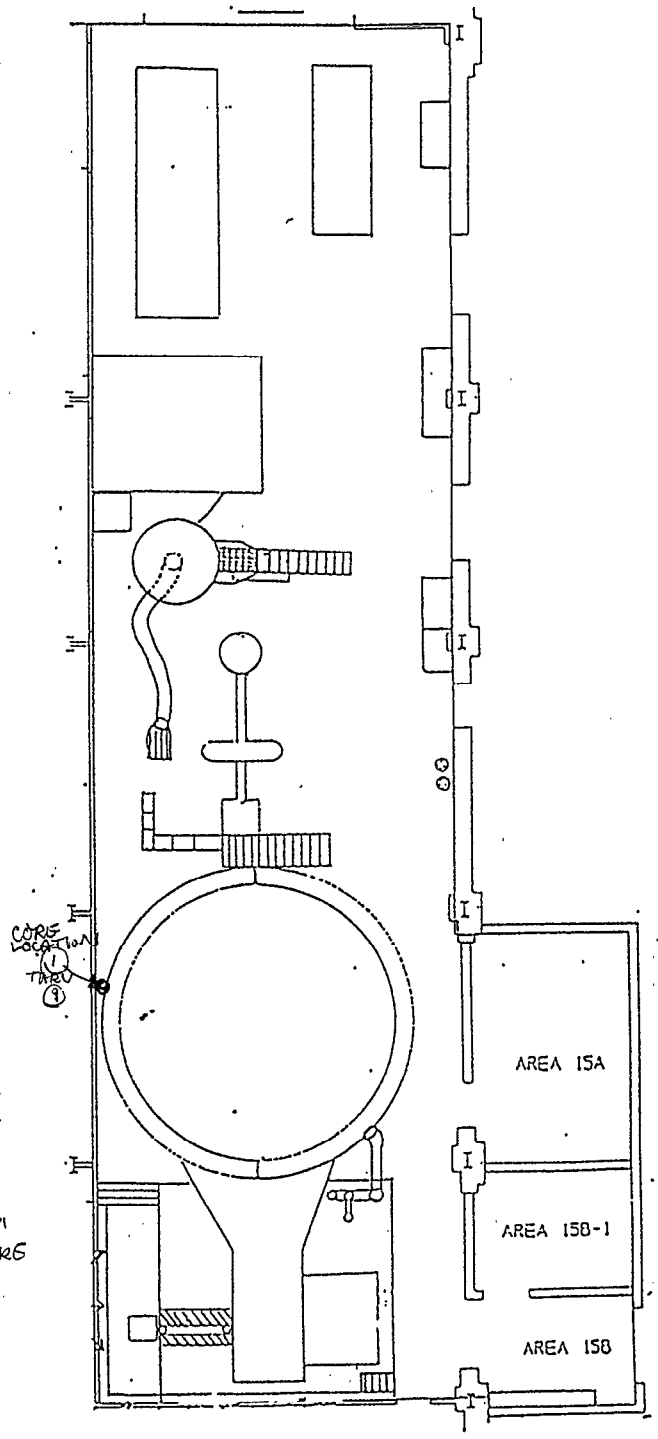

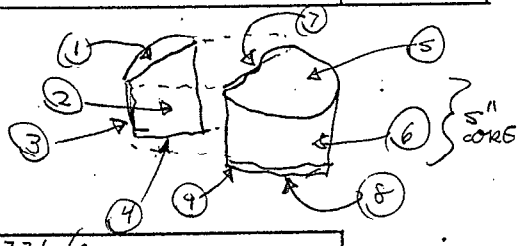

Instrument Model & s/n:	L2221 / A
Detector Model & s/n:	
Calibration Date:	
Efficiency	0.20 cpm / dpm based on S/Y90
Detector Area	100.5 cm2

REVIEW [illegible]

HILBERT ASSOCIATES, INC.

SURVEY # 399

C. HALLAM/CAH

SAMPLE DATE: 5-28-97

LOCATION: PRAXAIR SITE
AREA 15
CORE DRILLING/SAMPLING

DIRECT SURFACE MEASUREMENT ANALYSIS REPORT
(scaler measurement)

RADIATION MEASUREMENT: Beta-Gamma
RESULTS REPORTED UNITS: dpm per 100cm2
MEASUREMENT TYPE: direct scaler measurements

TOTAL BACKGROUND COUNTS	5-28-97 ~~54~~ 64 CPM
BACKGROUND COUNT TIME (MIN)	1 MIN
SAMPLE COUNT TIME (MIN)	1 MIN/SCAN

SAMPLE #	LOCATION CODE	LOCATION DESCRIPTION	GROSS SAMPLE COUNTS
1	N3/E0	TOP OF CORE	50-80 CPM
2		SIDE OF CORE	40-70 CPM
3		BOTTOM OF CORE	50-90 CPM
4	N16/E0	TOP OF 0-1' SAMPLE	70-100
5		TOP OF 1-2' SAMPLE	70-110
6		TOP OF 2-3' SAMPLE	60-100
7		TOP OF 3-4' SAMPLE	70-110
8	N10/E0	TOP OF 0-1' SAMPLE	70-110
9		TOP OF 1-2' SAMPLE	60-100
10		TOP OF 2-3' SAMPLE	70-100
11		TOP OF 3-4' SAMPLE	70-120
12	N12/E1	TOP OF CORE	200-600
13		SIDE/OUTSIDE OF CORE	70-100
14		SIDE @ CRACK (TOP 2")	100-300
15		SIDE @ EXPANSION JOINT	300-3000
16		SIDE @ CRACK (BOTTOM 3")	80-180
17		BOTTOM OF CORE	80-120
18		TOP OF 0-1' SAMPLE	100-160
19		TOP OF 1-2' SAMPLE	60-100
20		TOP OF 2-3' SAMPLE	60-80
21		TOP OF 3-4' SAMPLE	60-80
22			
23			
24			
25			
26			
27			
28			
29			
30			
31			
32			
33			
34			
35			
36			
37			
38			
39			
40			

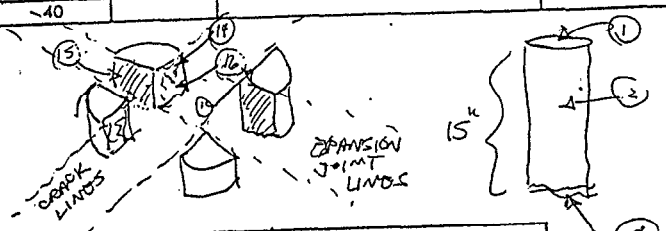

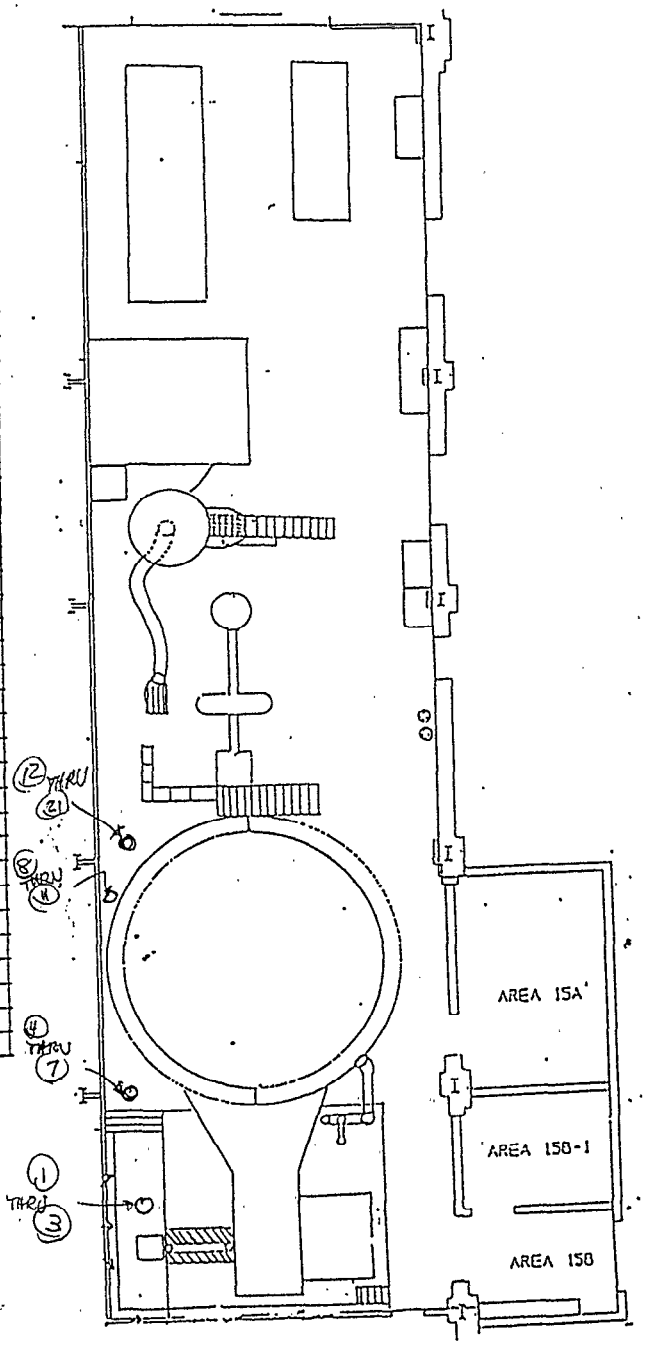

Instrument Model & s/n:	L2221/D
Detector Model & s/n:	
Calibration Date:	
Efficiency	cpm / dpm based on S/Y90
Detector Area	cm2

REVIEW

ENCL-C2.XLS

HILBERT ASSOCIATES, INC.
SURVEY # 406
C. HALLAM / [signature]
SAMPLE DATE: 5-29-97
LOCATION: PRAXAIR SITE
B14 AREA 15
CORE DRILLING

DIRECT SURFACE MEASUREMENT ANALYSIS REPORT
(scaler measurement)

RADIATION MEASUREMENT: Beta-Gamma
RESULTS REPORTED UNITS: dpm per 100cm2
MEASUREMENT TYPE: direct scaler measurements

TOTAL BACKGROUND COUNTS	74
BACKGROUND COUNT TIME (MIN)	1 MIN
SAMPLE COUNT TIME (MIN)	1 MIN/SCAN

SAMPLE #	LOCATION CODE	LOCATION DESCRIPTION	GROSS SAMPLE COUNTS
1	N26/E6	TOP OF CORE	80-110
2		TOP OF CORE	200-700
3		SIDE OF CORE	70-90
4		SIDE @ CRACK	80-110
5		BOTTOM OF CORE (1ST LAYER)	70-90
6		SIDE OF CORE	70-100
7		TOP 1/2 OF CORE @ CRACK	100-300
8		LOWER 1/2 OF CORE @ CRACK	80-110
9		BOTTOM OF CORE (1ST LAYER)	60-80
10		TOP OF 2ND LAYER	60-80
11		TOP OF 2ND LAYER	60-90
12		SIDE OF LOWER CORE	60-90
13		BOTTOM OF LOWER CORE	60-90
14			
15			
16			
17			
18			
19			
20			
21			
22			
23			
24			
25			
26			
27			
28			
29			
30			
31			
32			
33			
34			
35			
36			
37			
38			
39			
40			

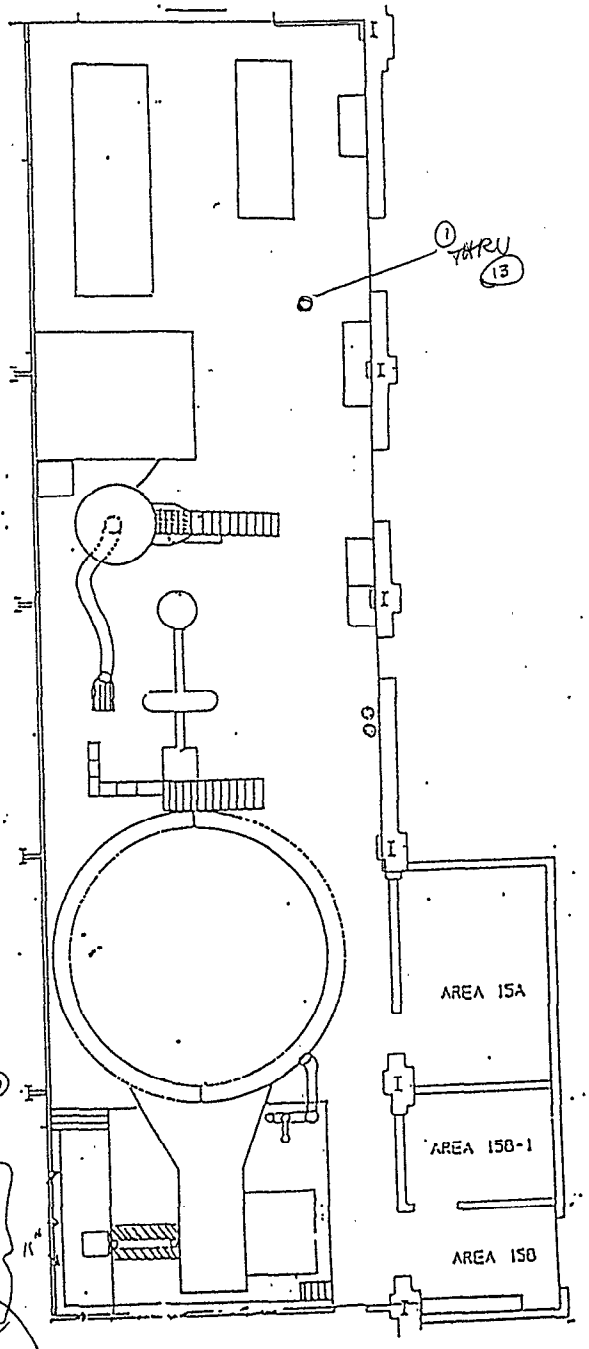

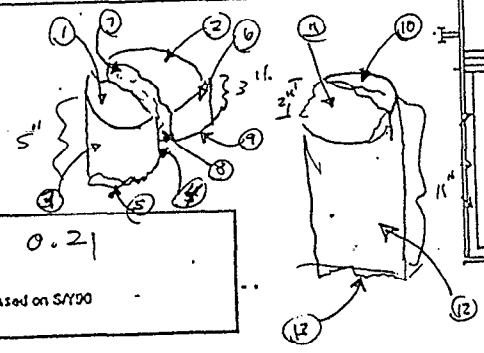

Instrument Model & s/n:	L2221/D 0.21
Detector Model & s/n:	
Calibration Date:	
Efficiency	0.21 cpm / dpm based on S/Y90
Detector Area	15.5 cm2

REVIEW [signature]

ENCL-C2.XLS

ILBERT ASSOCIATES, INC.
SURVEY #408

C. HALLAM / [signature]
SAMPLE DATE: 6-2-97
LOCATION: PRAXAIR SITE
B14 AREA 15

DIRECT SURFACE MEASUREMENT ANALYSIS REPORT
(scaler measurement)

RADIATION MEASUREMENT: Beta-Gamma
RESULTS REPORTED UNITS: dpm per 100cm2
MEASUREMENT TYPE: direct scaler measurements

TOTAL BACKGROUND COUNTS	64
BACKGROUND COUNT TIME (MIN)	6 MIN
SAMPLE COUNT TIME (MIN)	1 MIN/SCAN

SAMPLE #	LOCATION CODE	LOCATION DESCRIPTION	GROSS SAMPLE COUNTS
1	N19/E6	TOP OF SLAG LAYER 6-2-97	60-80 CPM
2		SIDE OF SLAG LAYER	60-80
3		BOTTOM OF SLAG LAYER	60-80
4		TOP OF UPPER FOOTER CORE	60-100
5		SIDE OF UPPER FOOTER CORE 6-2-97	60-100
6		SIDE OF UPPER FOOTER CORE	60-100
7		BOTTOM OF UPPER FOOTER CORE	60-100
8		TOP OF LOWER FOOTER CORE	60-100
9		SIDE OF LOWER FOOTER	60-100
10		SIDE OF LOWER FOOTER CORE	60-100
11		BOTTOM OF LOWER FOOTER CORE	60-100
12	N14/E6	0-1' SAMPLE	60-90
13		1-2' SAMPLE	60-90
14		2-3' SAMPLE	60-100
15		3-4' SAMPLE	60-90
16	N17/E6	TOP OF LOWER TRENCH CORE (1ST LAYER) 6-2-97	60-110
17		SIDE OF LOWER TRENCH CORE	60-80
18		BOTTOM OF LOWER TRENCH CORE	60-80
19		TOP OF LOWER TRENCH CORE (2ND LAYER)	60-100
20		SIDE OF LOWER TRENCH CORE	60-100
21		BOTTOM OF LOWER TRENCH CORE	60-90
22	N17/E6	0-1' SAMPLE	70-110
23		1-2' SAMPLE	70-110
24		2-3' SAMPLE	80-110
25		3-4' SAMPLE	60-90
26			
27			
28			
29			
30			
31			
32			
33			
34			
35			
36			
37			
38			
39			
40			

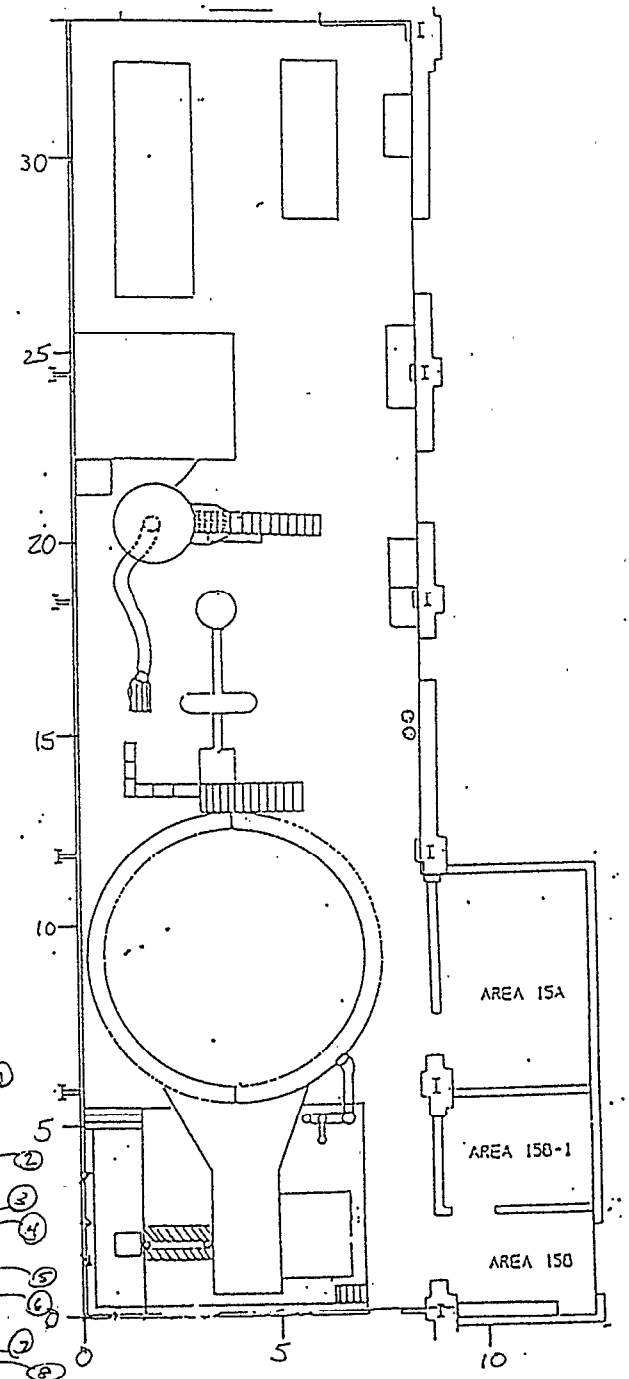

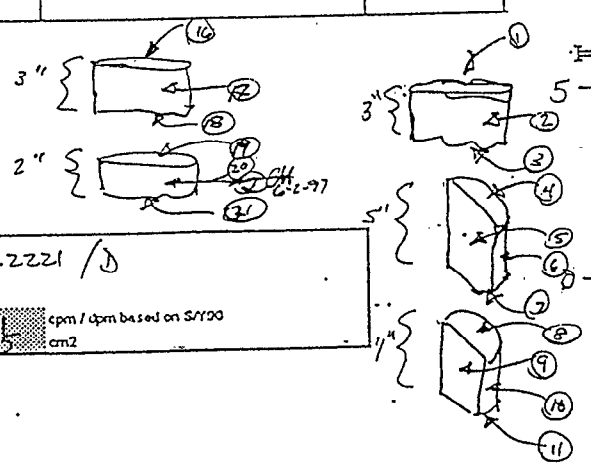

Instrument Model & s/n:	L2221 / D
Detector Model & s/n:	
Calibration Date:	
Efficiency	0.21 cpm / dpm based on S/Y90
Detector Area	15.5 cm2

REVIEW [signature]

ENCL-C2.XLS

HILBERT ASSOCIATES, INC.

DIRECT SURFACE MEASUREMENT ANALYSIS REPORT
(scaler measurement)

SURVEY # 414
C. HALLAM / [illegible]
SAMPLE DATE: 6-3-97
LOCATION: PRAXAIR SITE
B14 AREA 15
CORE DRILLING / SAMPLING

RADIATION MEASUREMENT: Beta-Gamma
RESULTS REPORTED UNITS: dpm per 100cm2
MEASUREMENT TYPE: direct scaler measurements

TOTAL BACKGROUND COUNTS	59
BACKGROUND COUNT TIME (MIN)	1 MIN
SAMPLE COUNT TIME (MIN)	1 MIN / SCAN

SAMPLE #	LOCATION CODE	LOCATION DESCRIPTION	GROSS SAMPLE COUNTS
1	N0/E7	TOP OF CORE	70-110 CPM
2		SIDE OF CORE	50-70
3		BOTTOM OF CORE	60-90
4		0-1' SAMPLE	50-80
5		1-2' SAMPLE	50-80
6		2-3' SAMPLE	50-80
7		3-4' SAMPLE	50-80
8	N0/E7	TOP OF CORE	60-80
9		SIDE OF CORE	100-80
10		BOTTOM OF CORE	100-80
11		0-1' SAMPLE	60-90
12		1-2' SAMPLE	50-80
13		2-3' SAMPLE	70-100
14		3-4' SAMPLE	60-90
15	N13/E7	TOP OF CORE	60-90
16		SIDE OF CORE	60-90
17		BOTTOM OF CORE	60-90
18			
19			
20			
21			
22			
23			
24			
25			
26			
27			
28			
29			
30			
31			
32			
33			
34			
35			
36			
37			
38			
39			
40			

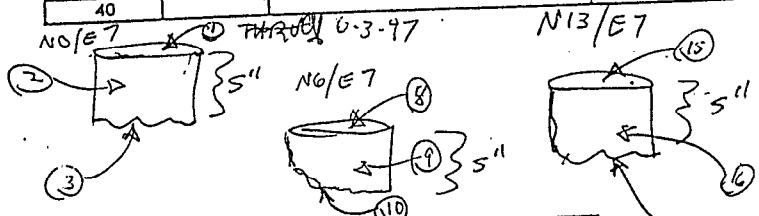

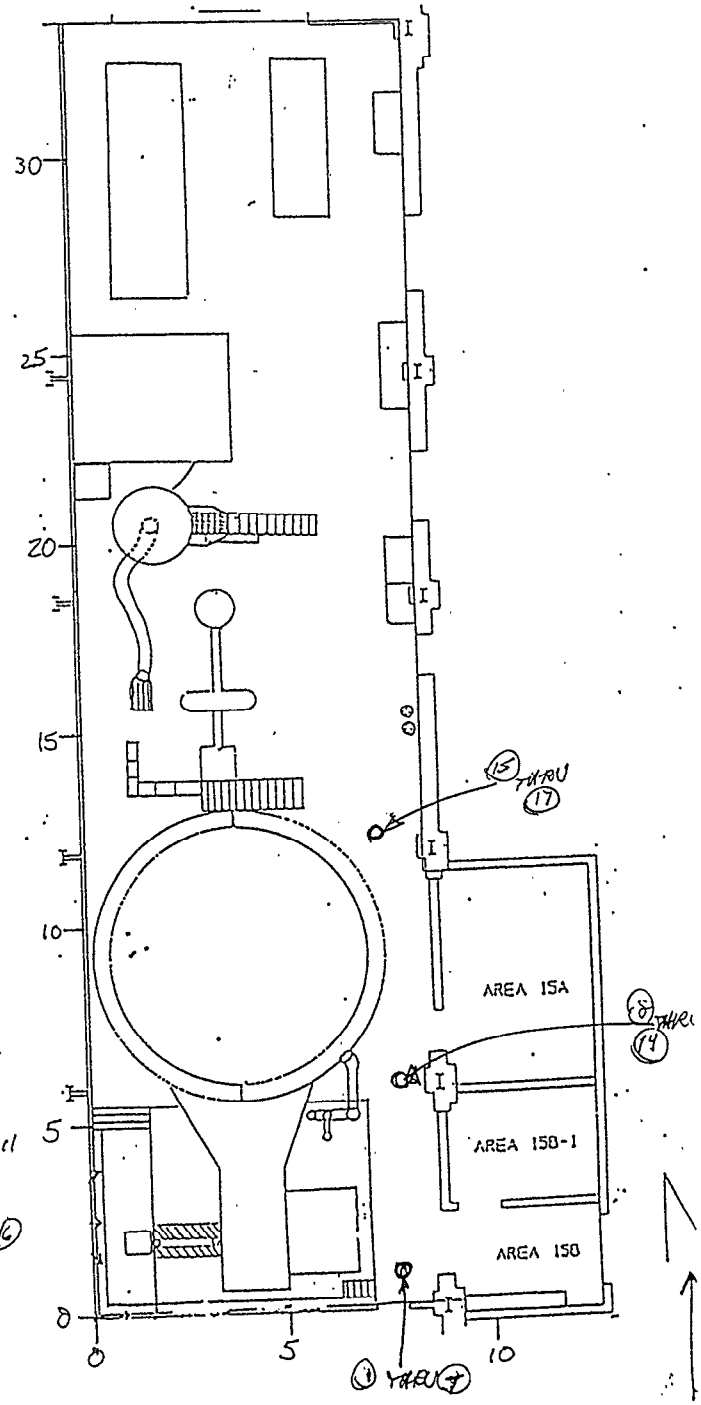

Instrument Model & s/n:	L 2221 / D
Detector Model & s/n:	
Calibration Date:	
Efficiency	cpm / dpm based on S/Y90
Detector Area	cm2

REVIEW [illegible]

ENCL-C2.XLS

SURVEY #417

HILDERT ASSOCIATES, INC.

DIRECT SURFACE MEASUREMENT ANALYSIS REPORT
(scaler measurement)

SAMPLE DATE: 6-4-97
LOCATION: PRAXAIR
B-14 AREA 15
OVERHEAD
DELINEATION

RADIATION MEASUREMENT: Beta-Gamma
RESULTS REPORTED UNITS: dpm per 100cm2
MEASUREMENT TYPE: direct scaler measurements

TOTAL BACKGROUND COUNTS	63
BACKGROUND COUNT TIME (MIN)	1 min.
SAMPLE COUNT TIME (MIN)	1 min.

SAMPLE #	LOCATION CODE	LOCATION DESCRIPTION	GROSS SAMPLE COUNTS RANGES Bγ	AREA cm²
1	SEE	MAIN I BEAM	170-230	225
2	MAP	I BEAM	160-210	150
3		CROSS ANGLE TOP	160-190	185
4		CROSS JOINT	170-210	120
5		CROSS ANGLE TOP	170-270	90
6				
7				
8				
9				
10				
11				
12				
13				
14				
15				
16				
17				
18				
19				
20				
21				
22				
23				
24				
25				
26				
27				
28				
29				
30				
31				
32				
33				
34				
35				
36				
37				
38				
39				
40				

N/A

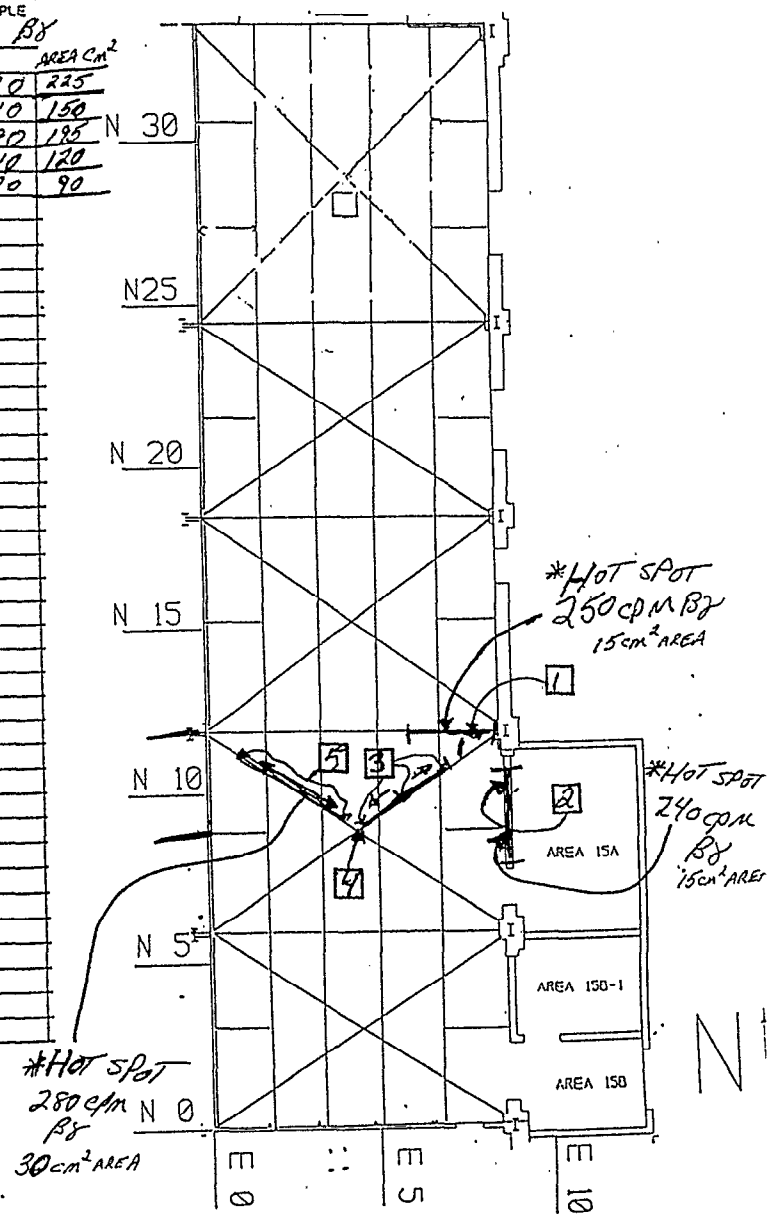

6-4-97

Instrument Model & s/n:	(13) L2221 w/44-9
Detector Model & s/n:	
Calibration Date:	
Efficiency	cpm / dpm based on S/Y90 ≈ .20
Detector Area	cm2 15.5

REVIEW

PAGE 1

ENCL-C2.XLS

SURVEY #418

HILBERT ASSOCIATES, INC.

DIRECT SURFACE MEASUREMENT ANALYSIS REPORT
(scaler measurement)

SAMPLE DATE:
LOCATION: PRAXAIR SITE
AREA 15
FLOOR DELINEATION
~~HB~~ ELEVATED & HOT AREAS

RADIATION MEASUREMENT: Beta-Gamma
RESULTS REPORTED UNITS: dpm per 100cm2
MEASUREMENT TYPE: direct scaler measurements

TOTAL BACKGROUND COUNTS	68cpm βγ
BACKGROUND COUNT TIME (MIN)	1min.
SAMPLE COUNT TIME (MIN)	1min.

SAMPLE #	LOCATION CODE	LOCATION DESCRIPTION	βγ RANGE GROSS SAMPLE COUNTS	βγ MAX
1	SEE	FLOOR SURFACE	200-325	350
2	MAP	ANCHOR & BOLTS WITHIN FLOOR	300-4000	4,162
3		FLOOR SURFACE	320-4000	~~1,120~~ 450
4			350-1000	1,120
5			200-350	375
6			220-340	360
7			200-300	~~340~~ 390
8			200-280	310
9				
10				
11				
12				
13				
14				
15				
16				
17				
18				
19				
20				
21				
22				
23				
24				
25				
26				
27				
28				
29				
30				
31				
32				
33				
34				
35				
36				
37				
38				
39				
40				

N A

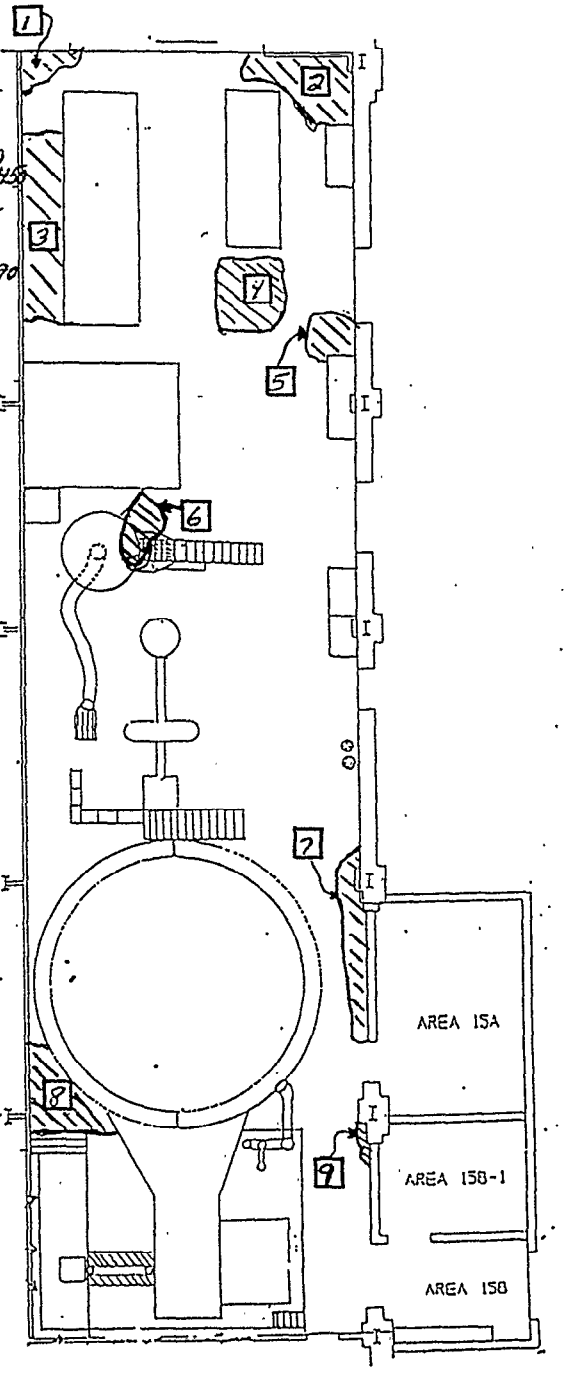

Wilson [signature]
6-5-97

Instrument Model & s/n:	(A) L2221 W/44-9
Detector Model & s/n:	
Calibration Date:	
Efficiency	cpm / dpm based on S/Y90 = .20
Detector Area	cm2 = 15.5

Reviewed [signature]

ENCL-C2.XLS

SURVEY # 422

HILBERT ASSOCIATES, INC.

DIRECT SURFACE MEASUREMENT ANALYSIS REPORT
(scaler measurement)

#422

SAMPLE DATE: 6-9-97
LOCATION: PRAXAIR SITE
B-14 AREA 15
OVERHEAD DELINEATION

RADIATION MEASUREMENT: Beta-Gamma
RESULTS REPORTED UNITS: dpm per 100cm2
MEASUREMENT TYPE: direct scaler measurements

TOTAL BACKGROUND COUNTS	62
BACKGROUND COUNT TIME (MIN)	1 MIN.
SAMPLE COUNT TIME (MIN)	1 MIN.

HOT SPOTS — BY

SAMPLE #	LOCATION CODE	LOCATION DESCRIPTION	GROSS SAMPLE COUNTS
		HOTSPOTS	
1 *	SEE MAP	MAIN I BEAM HORIZONTAL S. SIDE	550
2 *		" "	420
3			
4			
5			
6			
7			
8			
9			
10			
11			
12			
13			
14			
15			
16			
17		N/A	
18			
19			
20			
21			
22			
23			
24			
25			
26			
27			
28			
29			
30			
31			
32			
33			
34			
35			
36			
37			
38			
39			
40			

GRID LINE N-5

AREA 15
OVERHEAD I BEAM LAYOUT

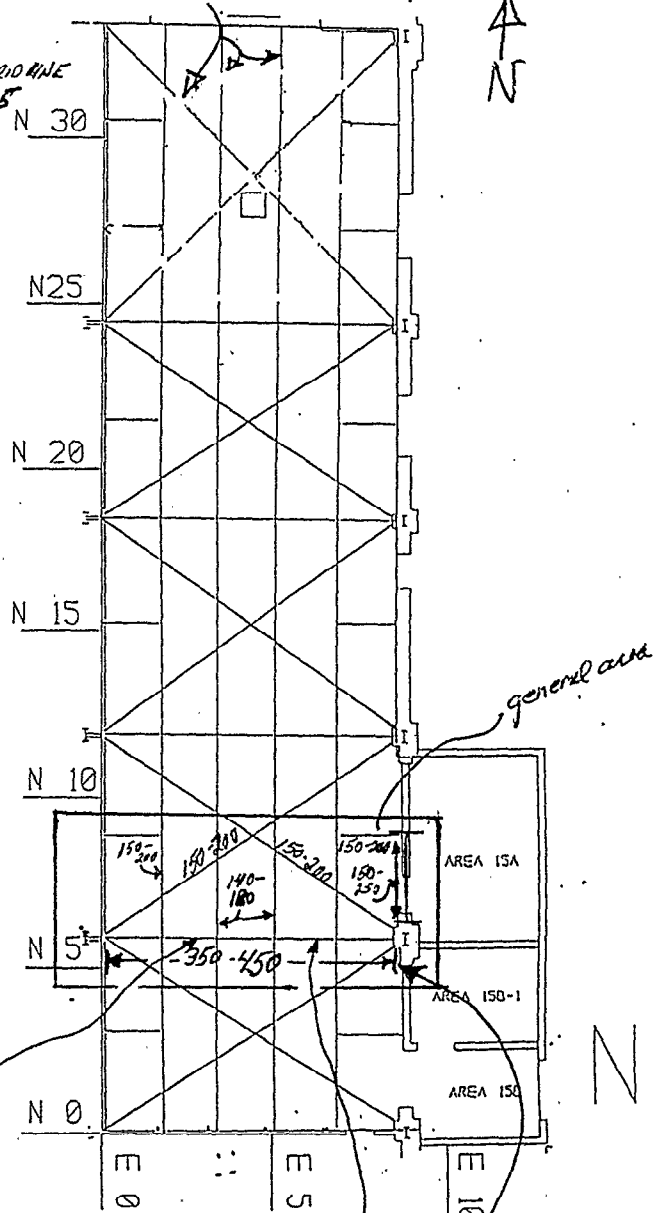

KEY:

[#] = HOT SPOT LOCATION

Wilbur [signature]
6-9-97

Instrument Model & s/n:	(B) L2221 W/44-9
Detector Model & s/n:	
Calibration Date:	
Efficiency	cpm / dpm based on S/Y90 = -20.
Detector Area	cm2 = 15.5

* 1

* 2

I BEAM 'X' SECTION

REVIEW [signature]

~9 ft² ← CONTAMINAT. 4" HORIZ. LEG TOP

ENCL-C2.XLS

HILBERT ASSOCIATES, INC.

DIRECT SURFACE MEASUREMENT ANALYSIS REPORT
(scaler measurement)

CURVEY #423
C. HALLAM
SAMPLE DATE: 6-4-97
LOCATION: PRAXAIR SITE
B14 AREA 15
CORE DRILLING & SAMPLING

RADIATION MEASUREMENT: Beta-Gamma
RESULTS REPORTED UNITS: dpm per 100cm2
MEASUREMENT TYPE: direct scaler measurements

TOTAL BACKGROUND COUNTS	62
BACKGROUND COUNT TIME (MIN)	1 MIN
SAMPLE COUNT TIME (MIN)	1 MIN/SCAN

SAMPLE #	LOCATION CODE	LOCATION DESCRIPTION	GROSS SAMPLE COUNTS
1	P2	TOP OF CORE	60-90 cpm
2		OUTSIDE/SIDE OF CORE	60-90
3		INSIDE OF CORE @ CRACK	60-90
4		BOTTOM OF CORE	60-90
5		TRENCH FILL SAMPLE	60-100
6		TOP OF CORE	60-90
7		SIDE OF CORE	60-90
8		BOTTOM OF CORE	60-90
9		0-1' SAMPLE	60-90
10		1-2' SAMPLE	60-90
11		2-3' SAMPLE	60-90
12		3-4' SAMPLE	60-100
13			
14			
15			
16			
17			
18			
19			
20			
21			
22			
23			
24			
25			
26			
27			
28			
29			
30			
31			
32			
33			
34			
35			
36			
37			
38			
39			
40			

TOP LAYER

BOTTOM LAYER

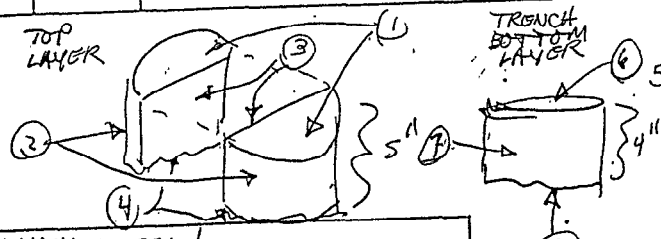

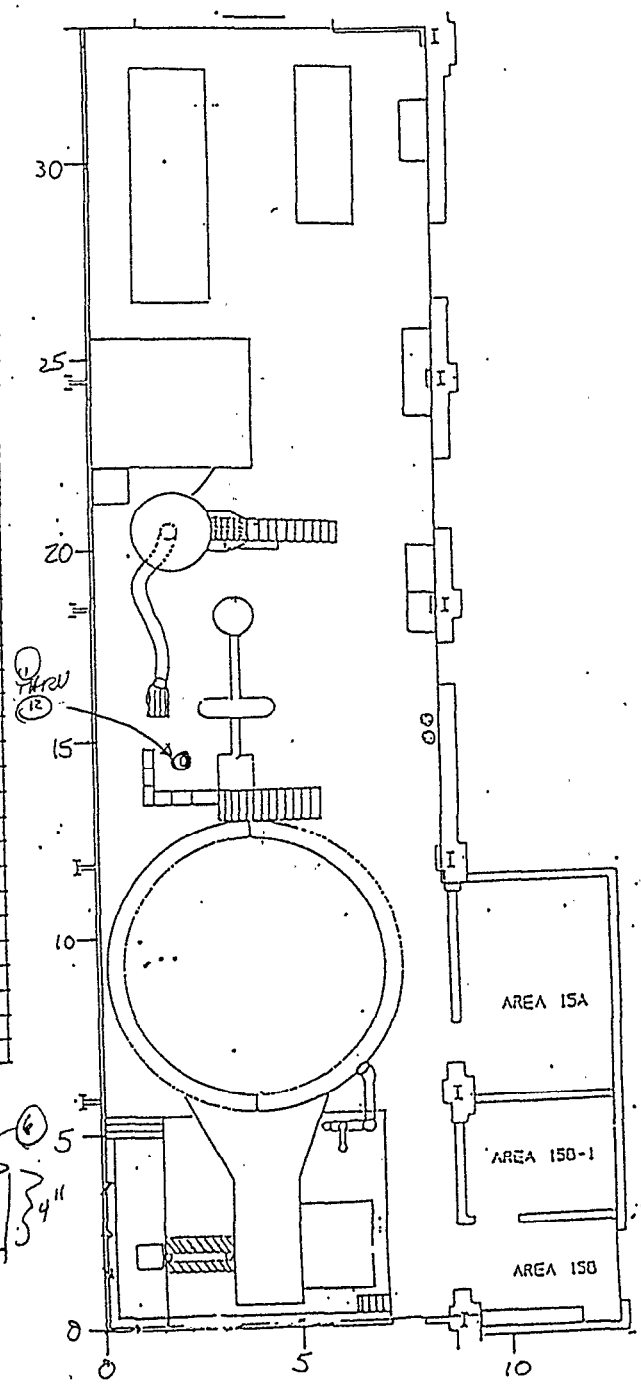

Instrument Model & s/n:	L2221 / D
Detector Model & s/n:	
Calibration Date:	
Efficiency	0.20 cpm / dpm based on S/Y90
Detector Area	15.5 cm2

REVIEW

PAGE 1

ENCL-C2.XLS

HILBERT ASSOCIATES, INC.

DIRECT SURFACE MEASUREMENT ANALYSIS REPORT
(scaler measurement)

#425
C. HALLAM / [illegible]
SAMPLE DATE: 6-5-97
LOCATION: PRAXAIR SITE
AREA 15

RADIATION MEASUREMENT: Beta-Gamma
RESULTS REPORTED UNITS: dpm per 100cm2
MEASUREMENT TYPE: direct scaler measurements

TOTAL BACKGROUND COUNTS	CH
BACKGROUND COUNT TIME (MIN)	1 MIN
SAMPLE COUNT TIME (MIN)	1 MIN / SCAN

* SAMPLES TAKEN BETWEEN SLABS

SAMPLE #	LOCATION CODE	LOCATION DESCRIPTION	GROSS SAMPLE COUNTS
1	N4	TOP OF CORE	60-80 CPM
2	↓	SIDE OF CORE	60-80
3		BOTTOM OF CORE	60-80
* 4		~~6-9"~~ 0-1' SAMPLE	60-90
* 5	↓	1-2' SAMPLE	60-90
6			
7			
8			
9			
10			
11			
12			
13			
14			
15			
16			
17			
18			
19			
20			
21			
22			
23			
24			
25			
26			
27			
28			
29			
30			
31			
32			
33			
34			
35			
36			
37			
38			
39			
40			

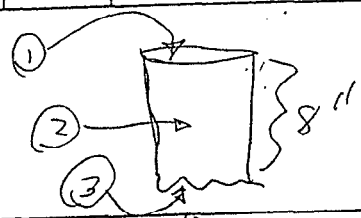

Instrument Model & s/n:	L2221/D ~~EFF 0.22CH~~ 6-5-97
Detector Model & s/n:	
Calibration Date:	
Efficiency	cpm / dpm based on S/Y90
Detector Area:	cm2

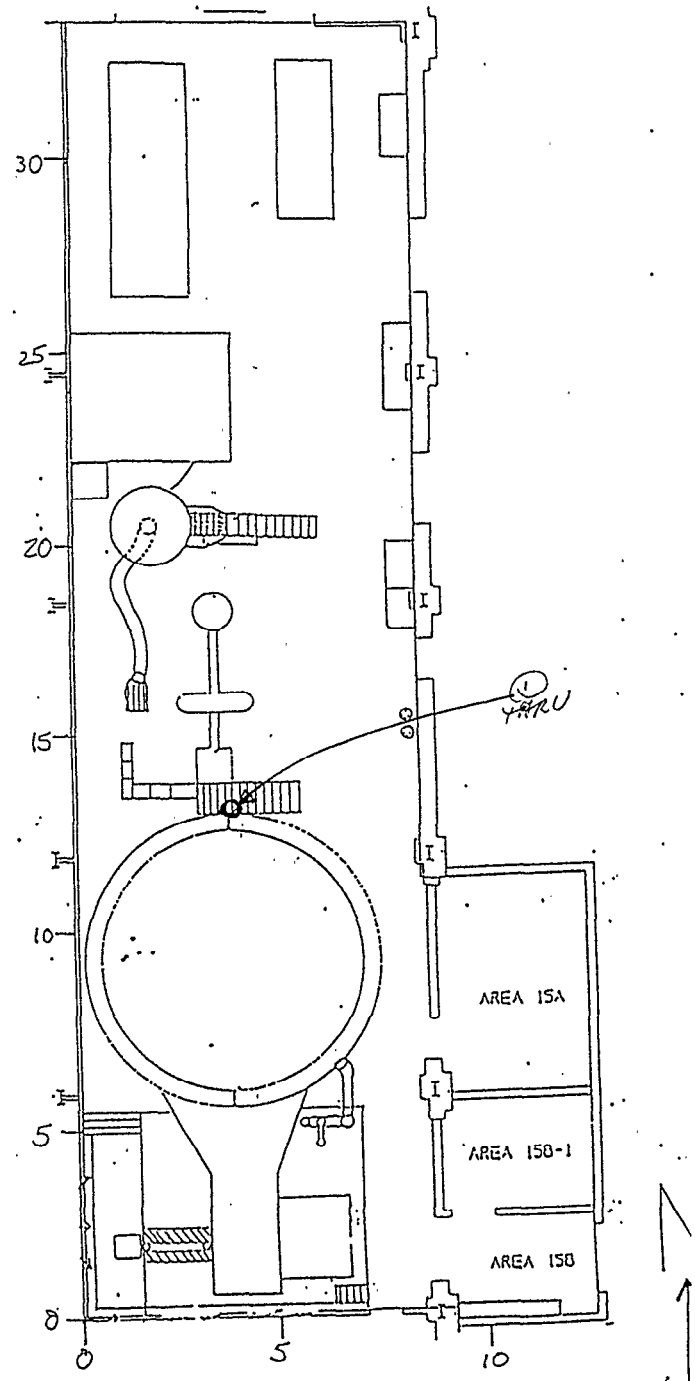

REVIEW [illegible]

ENCL-C2.XLS

HILBERT ASSOCIATES, INC.

DIRECT SURFACE MEASUREMENT ANALYSIS REPORT
(scaler measurement)

SURVEY # 427
O. HALLAM / [illegible]
SAMPLE DATE: 6-9-97
LOCATION: PRAXAIR SITE
B14 AREA 15
CORE DRILLING & SAMPLING

RADIATION MEASUREMENT: Beta-Gamma
RESULTS REPORTED UNITS: dpm per 100cm2
MEASUREMENT TYPE: direct scaler measurements

TOTAL BACKGROUND COUNTS	61
BACKGROUND COUNT TIME (MIN)	1 MIN
SAMPLE COUNT TIME (MIN)	1 MIN / SCAN

SAMPLE #	LOCATION CODE	LOCATION DESCRIPTION	GROSS SAMPLE COUNTS
1	AA2	TOP OF 1ST LAYER	60-80 CPM
2		SIDE OF 1ST LAYER	
3		BOTTOM OF 1ST LAYER	
4		TOP OF 2ND LAYER	
5		SIDE OF 2ND LAYER	~~60-80~~ 60-80
6		1/2" STEEL PLATE	~~60-80~~ 50-70
7		1.5" DIAM. PIPE END	60-80
8		BOTTOM OF 2ND LAYER	
9		TOP OF 3RD LAYER	60-90
10		SIDE OF 3RD LAYER	60-80
11		BOTTOM OF 3RD LAYER	~~60~~ 60-90
12		0-1' SAMPLE	60-80
13		1-2' SAMPLE	60-80
14		2-3' SAMPLE	
15		3-4' SAMPLE 60-100	
16			
17			
18			
19			
20			
21			
22			
23			
24			
25			
26			
27			
28			
29			
30			
31			
32			
33			
34			
35			
36			
37			
38			
39			
40			

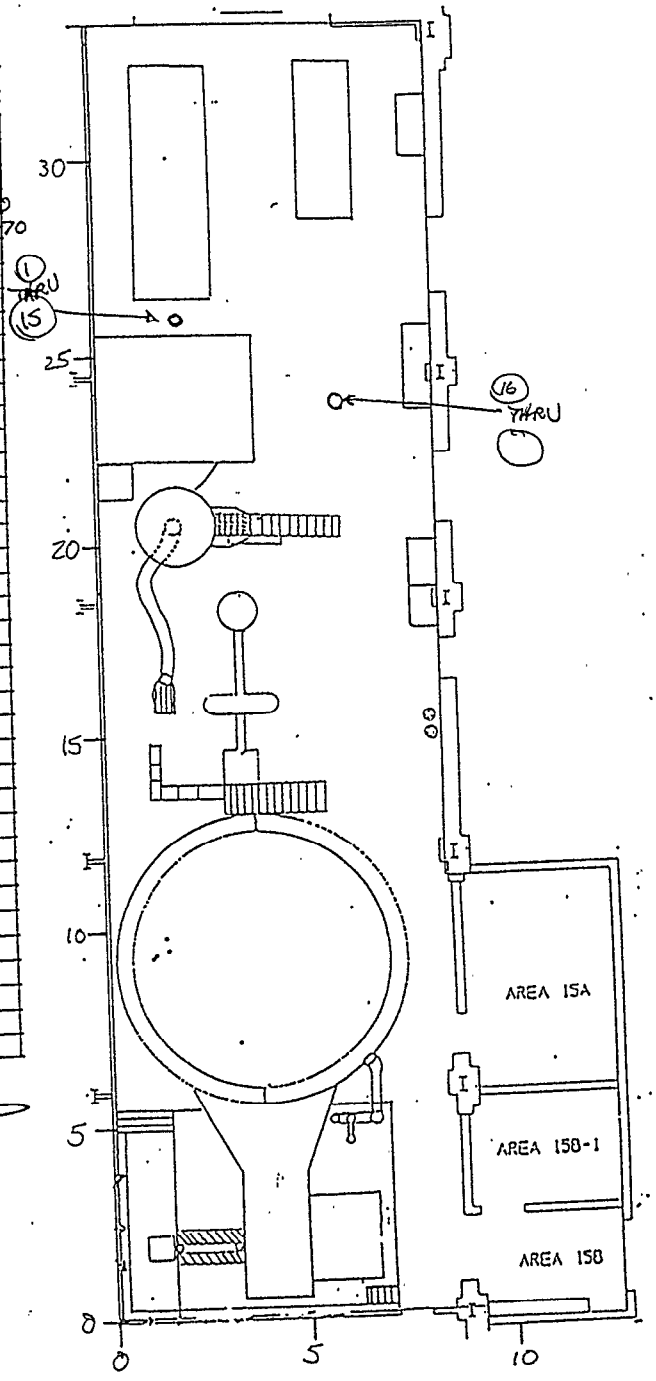

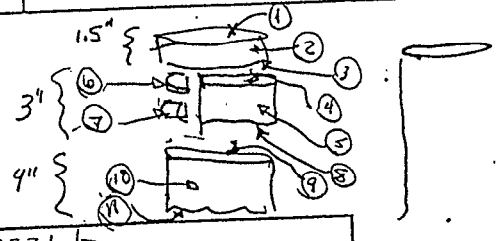

Instrument Model & s/n:	12221 / D
Detector Model & s/n:	
Calibration Date:	
Efficiency	0.[illegible] cpm / dpm based on S/Y90
Detector Area	15.5 cm2

REVIEW [illegible]

ENCL-C2.XLS

HILBERT ASSOCIATES INC
RADIOLOGICAL ENGINEERS

IDM Environmental
Bldg. 14, Praxair Site
Tonawanda, NY 14151

Radiological Survey Form

Hilbert Associates, Inc
Radiological Consultants
640 Maple Ave
Saratoga Springs, NY 12866
Phone: 518-584-0166
Fax: 518-584-8529
Contract # 95012

Date / Time 6-10-97/1015	Tech C. HALLAM/CHall	Instruments / sn L2221 /D EFF=0.22 BKGD=65
Location / Purpose B14 AREA 15 GRIDS Z7 & Z8		Survey # 429 RWP # N/A
SPOT DELINEATION OF CABLE PIT		

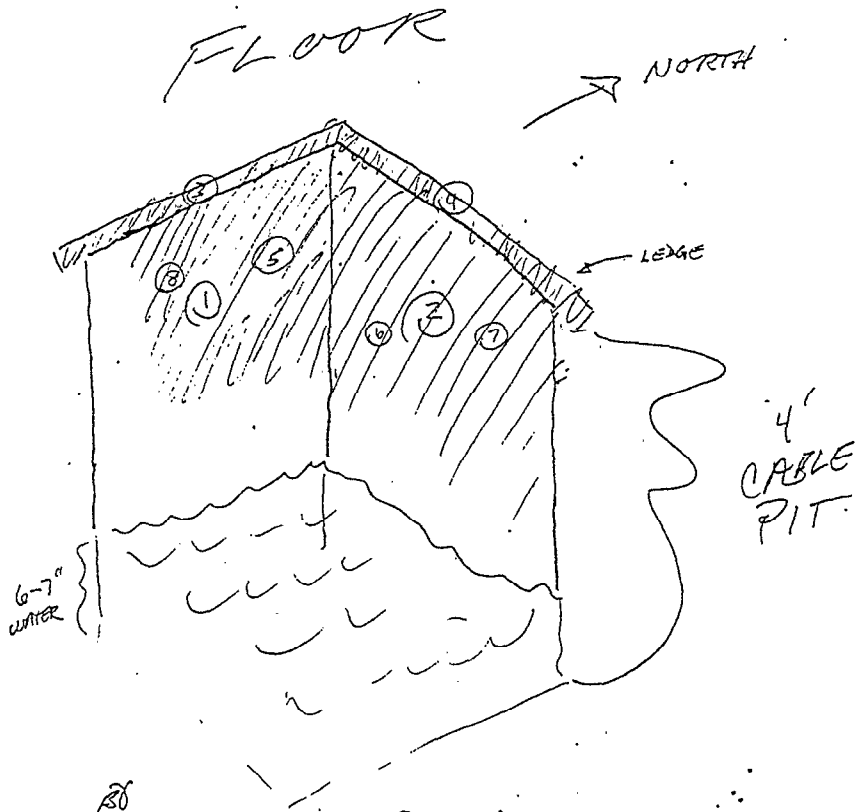

///// = AREA OF β SCAN INDICATING 80-200 CPM

Loc	Type	Description	Gross	Λ DPM	Gross	Beta DPM	Loc	Type	Description	Gross	Λ DPM	Gross	Beta DPM
1	SMEAR	WEST WALL	2		55		8	DP	WEST WALL	N	A	148	
2		NORTH WALL	3		71								
3		WEST LEDGE	0		66								
4		NORTH LEDGE	1		103								
5	DP	WEST WALL	N	A	184								
6		NORTH WALL			192								
7					171								

Comments: DP = DIRECT PROBE

Scaler S/N L2221/I		BKD	EFF	MDA
CT = 1 min	Alpha:	0.16	0.32	14
Tech C. HALLAM/CHall	Beta:	59	0.29	133

Review [signature]

HILBERT ASSOCIATES, INC.

DIRECT SURFACE MEASUREMENT ANALYSIS REPORT
(scaler measurement)

SURVEY # 439

SAMPLE DATE: 6-16, 6-12, 6-18, '97
LOCATION:
PRAXAIR SITE
BLDG. #14 AREA 15
OVERHEAD DELINEATION
(I BEAMS, CEILING, & WALLS)

RADIATION MEASUREMENT: Beta-Gamma
RESULTS REPORTED UNITS: dpm per 100cm2
MEASUREMENT TYPE: direct scaler measurements

TOTAL BACKGROUND COUNTS	66
BACKGROUND COUNT TIME (MIN)	1 MIN.
SAMPLE COUNT TIME (MIN)	1 MIN.

HOT SPOTS

SAMPLE #	LOCATION CODE	LOCATION DESCRIPTION	BG GROSS SAMPLE COUNTS
1 *	SEEN AP	TOP OF WALL @ CRANE HAR.	530
2 *	↓	" "	420
3			
4			
5			
6			
7			
8			
9			
10			
11			
12			
13			
14			
15			
16			
17			
18			
19			
20			
21			
22			
23			
24			
25			
26			
27			
28			
29			
30			
31			
32			
33			
34			
35			
36			
37			
38			
39			
40			

I BEAM LAYOUT

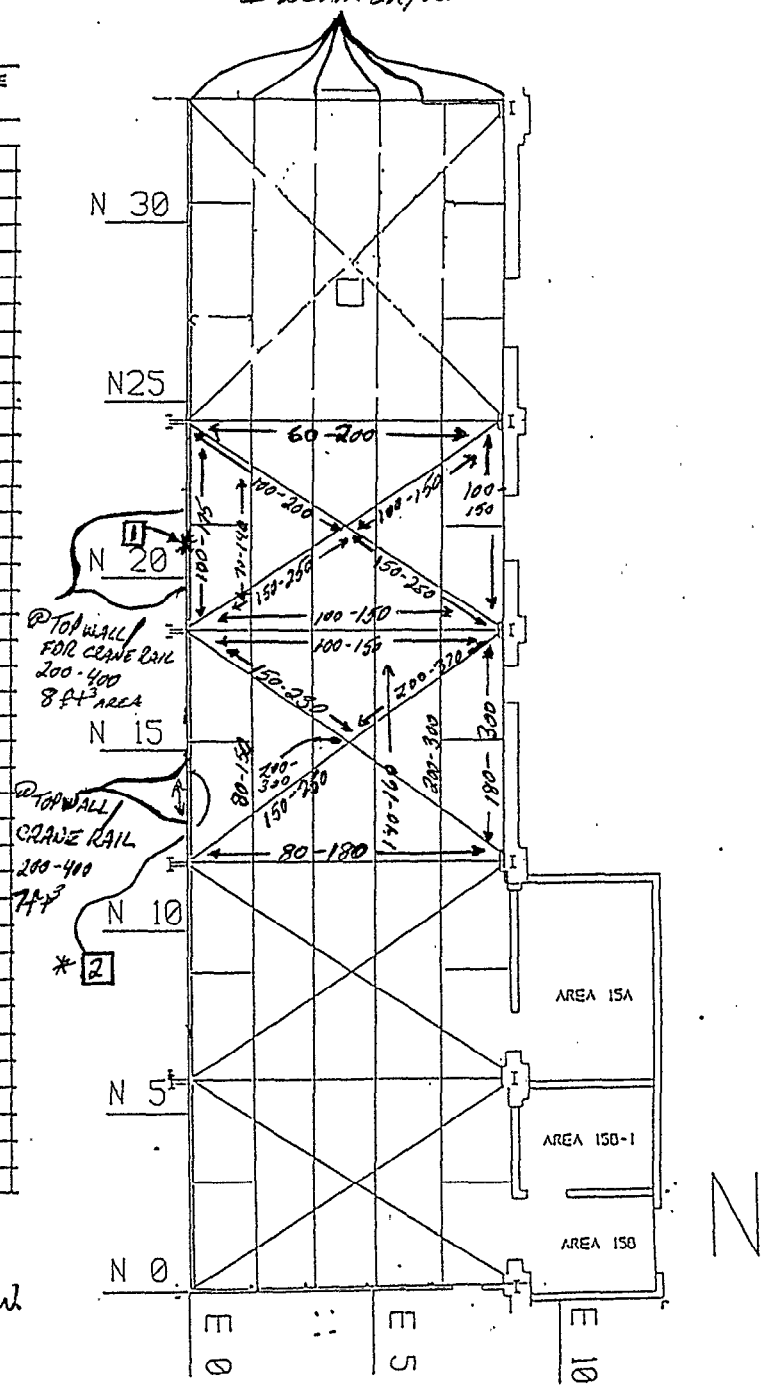

= DIRECT PROBE (BG/15.5 cm²) MEASUREMENT LOCATION

William W. [illegible]
6-16-97

Instrument Model & S/N:	(B) L2221 w/44-9
Detector Model & S/N:	
Calibration Date:	
Efficiency	cpm / dpm based on S/Y90 = .20
Detector Area	cm2 = 15.5

REVIEW [illegible]

ENCL-C2.XLS

HILBERT ASSOCIATES, INC.
SURVEY # 434
C. HALLAM/
SAMPLE DATE: 6-10-97
LOCATION: PRAXAIR SITE
B14 AREA 15

DIRECT SURFACE MEASUREMENT ANALYSIS REPORT
(scaler measurement)

RADIATION MEASUREMENT: Beta-Gamma
RESULTS REPORTED UNITS: dpm per 100cm2
MEASUREMENT TYPE: direct scaler measurements

TOTAL BACKGROUND COUNTS	55
BACKGROUND COUNT TIME (MIN)	1 MIN
SAMPLE COUNT TIME (MIN)	1 MIN

SAMPLE #	LOCATION CODE	LOCATION DESCRIPTION	GROSS SAMPLE COUNTS
1	Z7/Z8	TOP OF SAMPLE Z97-1 (PETRIE)	138 CPM
2		TOP OF SAMPLE Z97-2 (PETRIE)	126
3		TOP OF SAMPLE Z97-3 (PETRIE)	103
4			
5			
6			
7			
8			
9			
10			
11			
12			
13			
14			
15			
16			
17			
18			
19			
20			
21			
22			
23			
24			
25			
26			
27			
28			
29			
30			
31			
32			
33			
34			
35			
36			
37			
38			
39			
40			

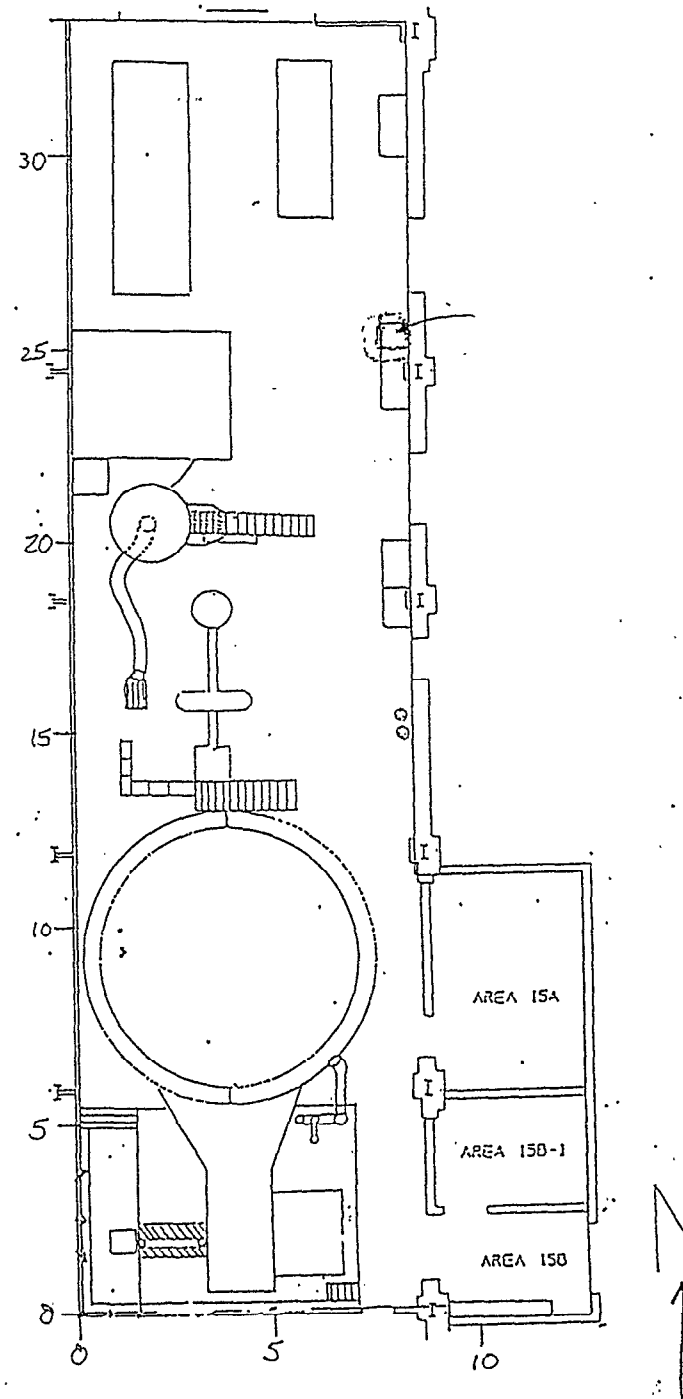

Instrument Model & s/n:	L2221/D
Detector Model & s/n:	
Calibration Date:	
Efficiency	0.22 cpm / dpm based on S/Y90
Detector Area	51.5 cm2

REVIEW

PAGE 1

ENCL-C2.XLS

SURVEY # 446

HILBERT ASSOCIATES, INC.

DIRECT SURFACE MEASUREMENT ANALYSIS REPORT
(scaler measurement)

#446

SAMPLE DATE: 6-17, & 6-18, '97
LOCATION: PRAXAIR SITE
B-14, AREA 15 OVERHEAD
DELINEATION

RADIATION MEASUREMENT: Beta-Gamma
RESULTS REPORTED UNITS: dpm per 100cm2
MEASUREMENT TYPE: direct scaler measurements

TOTAL BACKGROUND COUNTS	65
BACKGROUND COUNT TIME (MIN)	1 MIN.
SAMPLE COUNT TIME (MIN)	1 MIN.

HOT SPOTS — BY

SAMPLE #	LOCATION CODE	LOCATION DESCRIPTION	GROSS SAMPLE COUNTS	AREA ft3
1	SEE	I BEAM LEDGE HOR.	460	1
2	MAP	HOR. @ TOP OF WALL/CRANE RAIL	620	1
3		I BEAM LEDGE HOR. "	440	2
4		"	450	1
5				
6				
7				
8				
9				
10				
11				
12				
13				
14				
15				
16				
17				
18				
19				
20				
21				
22				
23				
24				
25				
26				
27				
28				
29				
30				
31				
32				
33				
34				
35				
36				
37				
38				
39				
40				

N/A

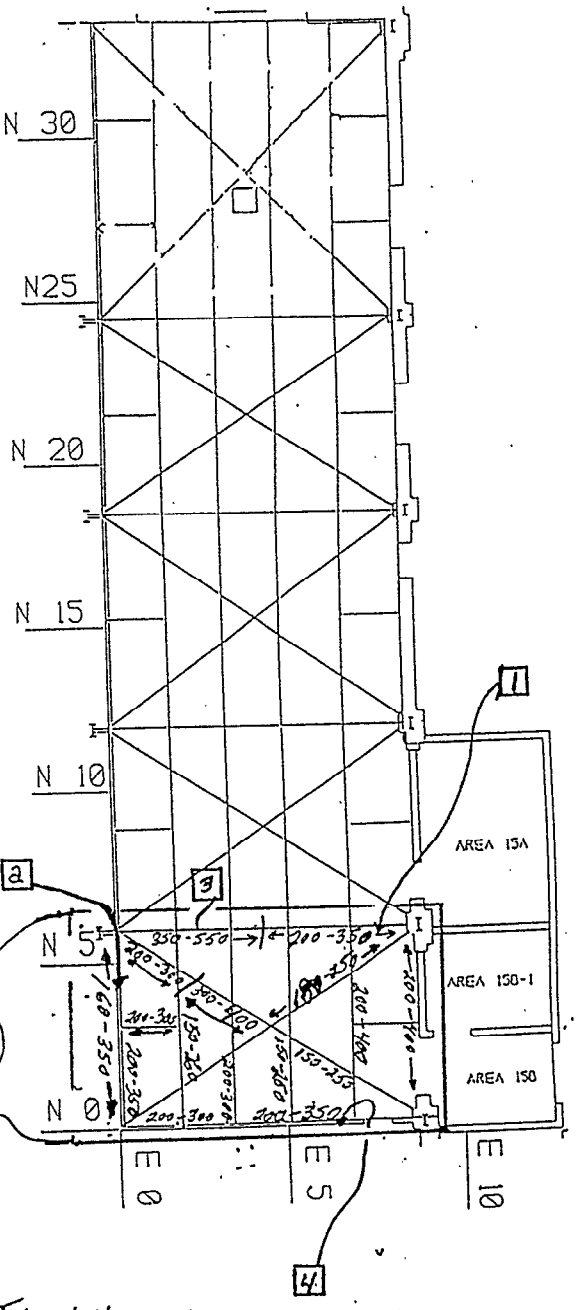

KEY:
[#] = DIRECT PROBE (BY/15.5 cm²) MEASUREMENT LOCATION

Wilbert
6-18-97

Instrument Model & S/N:	(B) L2221 W/44-9
Detector Model & S/N:	
Calibration Date:	
Efficiency	cpm / dpm based on SN90 = .20
Detector Area	cm2 = 15.5

* NOTE: TYPICAL HORIZONTAL SURFACES IN THE ABOVE SURVEYED AREA OF AREA 15 OVERHEAD BEAMS SHOWED THAT BY DIRECT PROBE READINGS WOULD INCREASE, AFTER REMOVING DUST LAYERS BY AN AVERAGE OF 50 TO 60 CCPM.

REVIEW

ENCL-C2.XLS

HILBERT ASSOCIATES, INC.

DIRECT SURFACE MEASUREMENT ANALYSIS REPORT
(scaler measurement)

SURVEY #448

SAMPLE DATE: 6-18-97
LOCATION: PRAXAIR SITE
B-14 AREA 15
OVERHEAD DELINEATION
SAMPLING SURVEY

RADIATION MEASUREMENT: Beta-Gamma
RESULTS REPORTED UNITS: dpm per 100cm2
MEASUREMENT TYPE: direct scaler measurements

TOTAL BACKGROUND COUNTS	58 cpm
BACKGROUND COUNT TIME (MIN)	1 min
SAMPLE COUNT TIME (MIN)	1 MIN.

PAINT CHIPS

SAMPLE #	LOCATION CODE	LOCATION DESCRIPTION	GROSS SAMPLE COUNTS BEFORE	GROSS SAMPLE COUNTS AFTER PAINT REMOVAL Dreadle gun
1	SEE MAP	VERTICAL SURFACE @ BEAM PAINT CHIPS	68	61
2		HORIZONTAL SURFACE @ BEAM	71	65
3		BOTTOM LEDGE E. SIDE CRANE RAIL	240	145
4		HORIZONTAL TOP PLATE OVER BEAM	250	90
5		VERTICAL - I BEAM	86	65
6		HORIZONTAL - I BEAM	430	105
7				
8				
9				
10				
11				
12				
13				
14				
15				
16				
17				
18				
19				
20				
21				
22				
23				
24				
25				
26				
27				
28				
29				
30				
31				
32				
33				
34				
35				
36				
37				
38				
39				
40				

N/A

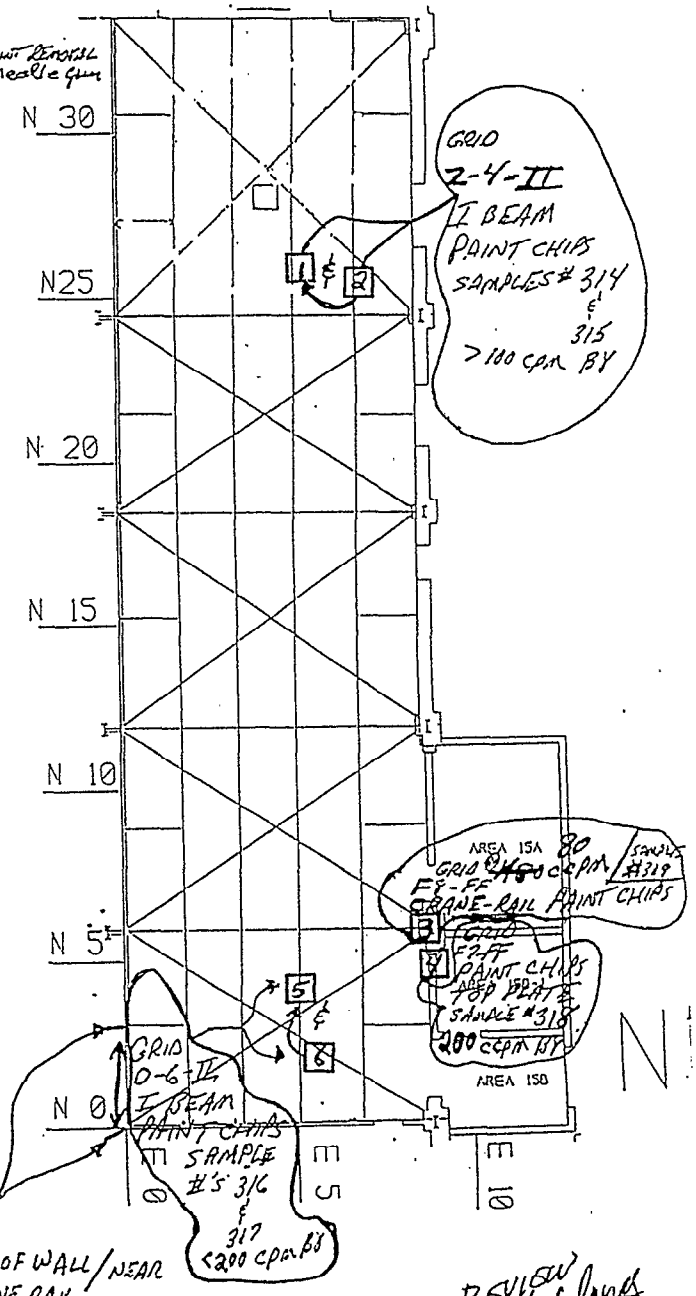

= SAMPLE LOCATION

6-18-97

Instrument Model & s/n:	(B) L2221 W/44-9
Detector Model & s/n:	
Calibration Date:	
Efficiency	cpm / dpm based on S/Y90 = .20
Detector Area	cm2 = 15.5

@ TOP OF WALL / NEAR CRANE RAIL
DUST, PAINT CHIPS, & PLASTER
AREA = 6 ft³ AVG 200 cpm BY DIRECT FRISK.
COC SAMPLE # 330
< 100 cpm BY

REVIEW

ENCL-C2.XLS

HILBERT ASSOCIATES INC
RADIOLOGICAL ENGINEERS

IDM Environmental
Bldg. 14, Praxair Site
Tonawanda, NY 14151

Radiological Survey Form

Hilbert Associates, Inc
Radiological Consultants
640 Maple Ave
Saratoga Springs, NY 12866
Phone: 518-584-0166
Fax: 518-584-8529
Contract # 95012

Date / Time 6-17-97 1600	Tech William [signature]	Instruments / sn (B) L2221 W/44-9
Location / Purpose PRAXAIR SITE B-14 AREA #5 OVERHEAD		Survey # 449 RWP # ____
DELINEATION SURVEY		

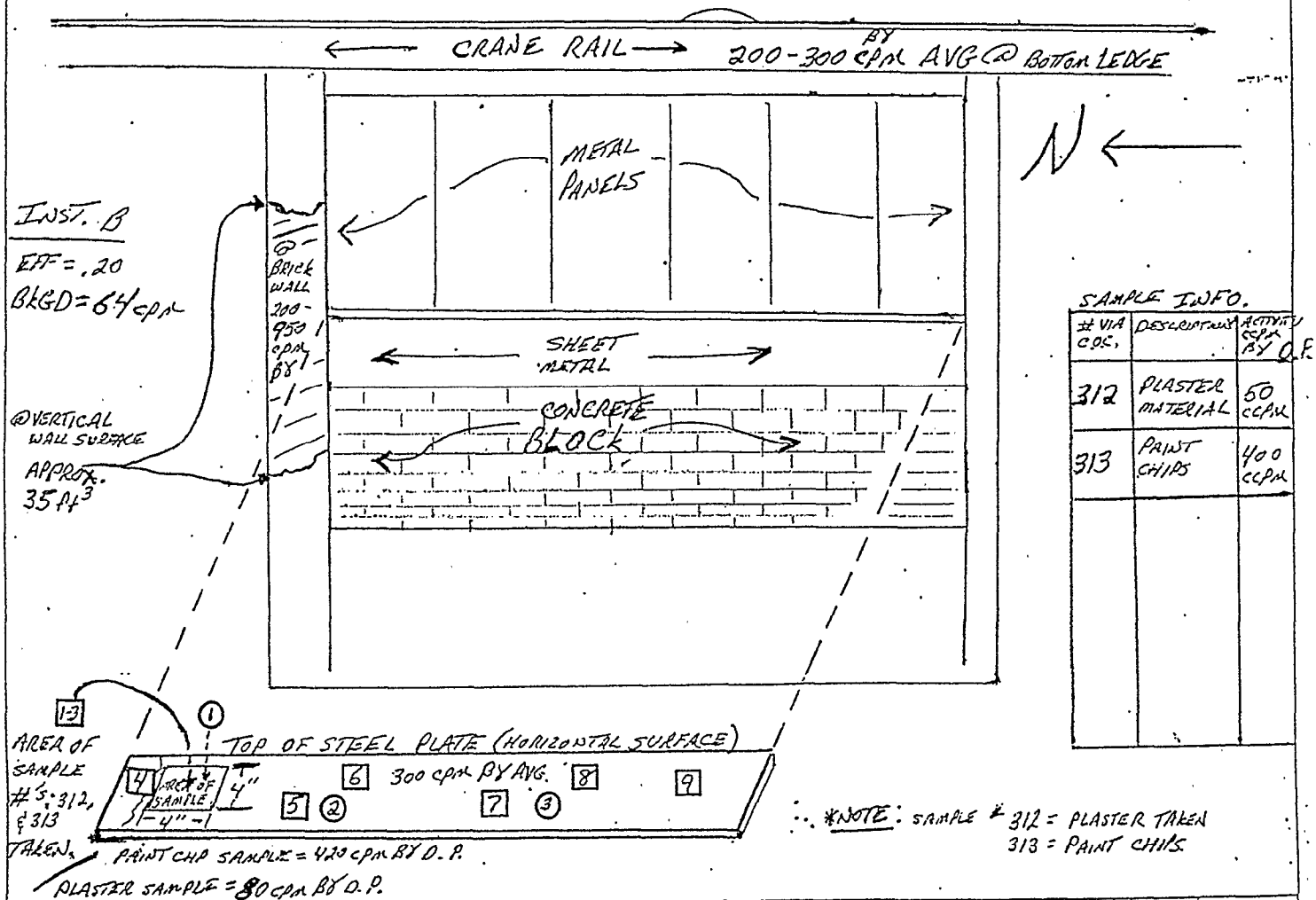

SAMPLE INFO.

# VIA COC.	DESCRIPTION	ACTIVITY CCPM BY D.P.
312	PLASTER MATERIAL	50 CCPM
313	PAINT CHIPS	400 CCPM

∴ *NOTE: SAMPLE # 312 = PLASTER TAKEN
313 = PAINT CHIPS

Loc	Type	Description	Gross	Δ DPM	Gross	Beta DPM	Loc	Type	Description	Gross	Δ DPM	Gross	Beta DPM
1	D.P.	PLASTER PRIOR TO SAMPLING			2500	81k	8	D.P.	SEE ABOVE	N		320	8k
2	↓	YELLOW PAINT AFTER PLASTER REMOVAL ~~SAMPLES~~			6100	200k	9	↓	↓		A	410	11k
3	↓	AFTER YELLOW PAINT REMOVAL	N		5,000	161k			N A				
4	↓	NO PLASTER - STEEL SURFACE		A	4,800	154k	1	S	AREA OF SAMPLE TAKEN	1	2	61	0
5	↓	SEE ABOVE			450	13k	2	↓	SEE ABOVE	0	-1	58	-10
6	↓	↓			480	13k	3	↓	↓	0	-1	48	-45
7	↓	↓			550	16k			N A				

Comments: - D.P. = DIRECT PROBE GROSS CPM BY WITH 44-9 FOR 1 MIN. COUNT.
- S = SMEAR OR SWIPE

		BKD	EFF	MDA
Scaler S/N (I) 2929				
CT = 1 MIN.	Alpha:	154/700 = .61	.29	135
Tech William W. [signature]	Beta:	467F4/770 = .20	.33	15

Review [signature]

HILBERT ASSOCIATES, INC.

SURVEY # 450

DIRECT SURFACE MEASUREMENT ANALYSIS REPORT
(scaler measurement)

SAMPLE DATE: 6-10-97
LOCATION: PRAXAIR SITE
BLDG. # 14 AREA 15
OVERHEAD (I BEAM, WALL, & CEILING)
DELINEATION

RADIATION MEASUREMENT: Beta-Gamma
RESULTS REPORTED UNITS: dpm per 100cm2
MEASUREMENT TYPE: direct scaler measurements

TOTAL BACKGROUND COUNTS	63
BACKGROUND COUNT TIME (MIN)	1 MIN.
SAMPLE COUNT TIME (MIN)	1 MIN.

HOT SPOTS BY

SAMPLE #	LOCATION CODE	LOCATION DESCRIPTION	GROSS SAMPLE COUNTS
1 *	SEE	TOP OF WALL @ CRANE RAIL	800
2 *	MAP		280
3			
4			
5			
6			
7			
8			
9			
10			
11			
12			
13			
14			
15		N/A	
16			
17			
18			
19			
20			
21			
22			
23			
24			
25			
26			
27			
28			
29			
30			
31			
32			
33			
34			
35			
36			
37			
38			
39			
40			

I BEAM LAYOUT

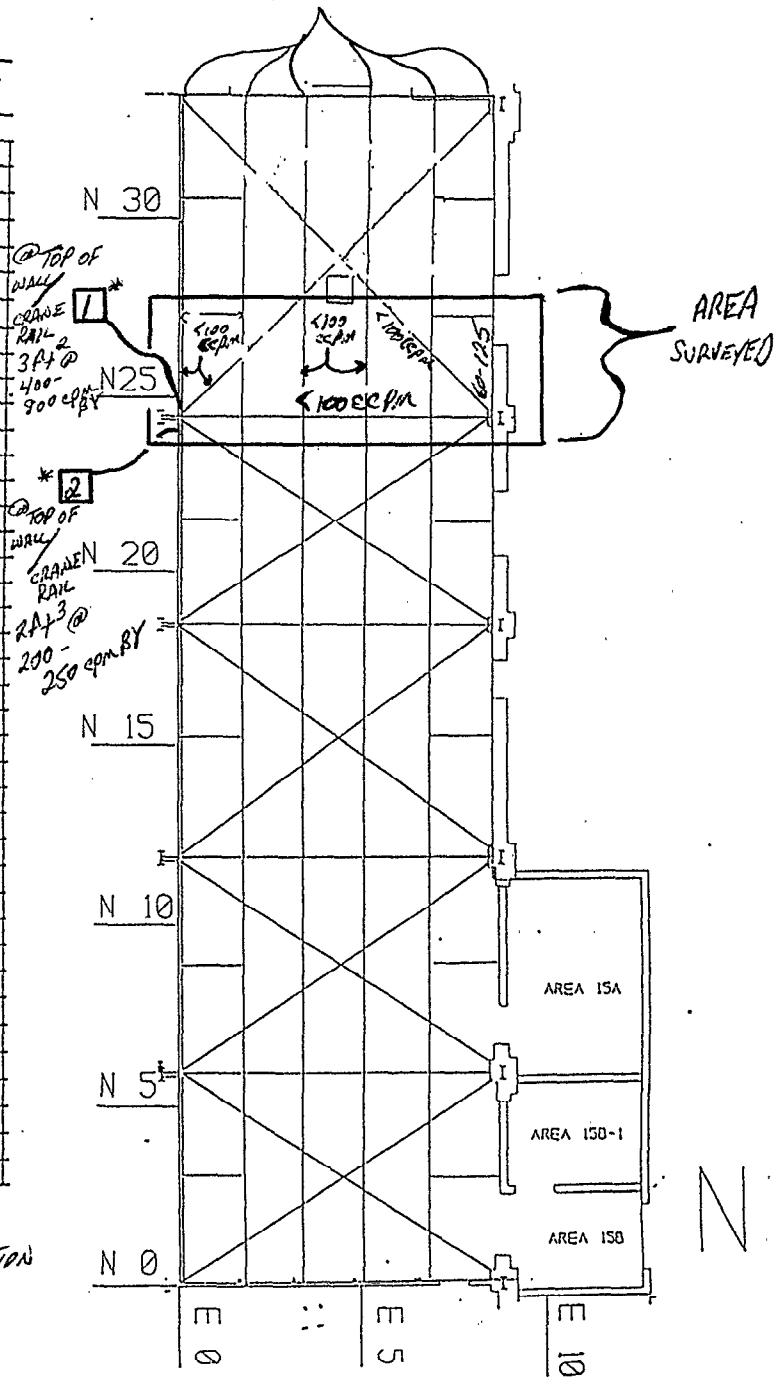

[#] = DIRECT PROBE (BY/15.5 cm²) MEASUREMENT LOCATION

William W. [signature]
6-10-97

Instrument Model & S/N:	(B) L2221 W/44-9 (BY)
Detector Model & S/N:	
Calibration Date:	
Efficiency	cpm / dpm based on S/Y90 = .20
Detector Area	cm2 = 15.5

REVIEW [signature]

HILBERT ASSOCIATES, INC.

DIRECT SURFACE MEASUREMENT ANALYSIS REPORT

(scaler measurement)

SURVEY #457

SAMPLE DATE: 6-25-97
LOCATION: PRAXAIR SITE
AREA 15 FLOOR
CRACK & JOINT
INVESTIGATION & DELINEATION

RADIATION MEASUREMENT: Beta-Gamma
RESULTS REPORTED UNITS: dpm per 100cm2
MEASUREMENT TYPE: direct scaler measurements

TOTAL BACKGROUND COUNTS	51 cpm
BACKGROUND COUNT TIME (MIN)	1 MIN.
SAMPLE COUNT TIME (MIN)	1 MIN.

CRACKS & JOINTS — B8

SAMPLE #	LOCATION CODE	LOCATION DESCRIPTION	GROSS SAMPLE COUNTS
1	SEE	JOINT @ SURFACE PRIOR TO DEL	350
2	MAP	@ 2" DEPTH	450
3		@ 4" DEPTH TO GRAVEL	111
4		CRACK @ SURFACE PRIOR TO CHIPPING	610
5		@ 2" DEPTH	108
6		JOINT @ SURFACE PRIOR TO CHIPPING	325
7		@ 2" DEPTH	136
8		CRACK @ SURFACE PRIOR TO CHIPPING	380
9		@ 2" DEPTH	92
10		JOINT @ SURFACE PRIOR TO CHIPPING	212
11		@ 2" DEPTH	126
12			
13			
14			
15			
16			
17			
18			
19			
20			
21			
22		N/A	
23			
24			
25			
26			
27			
28			
29			
30			
31			
32			
33			
34			
35			
36			
37			
38			
39			
40			

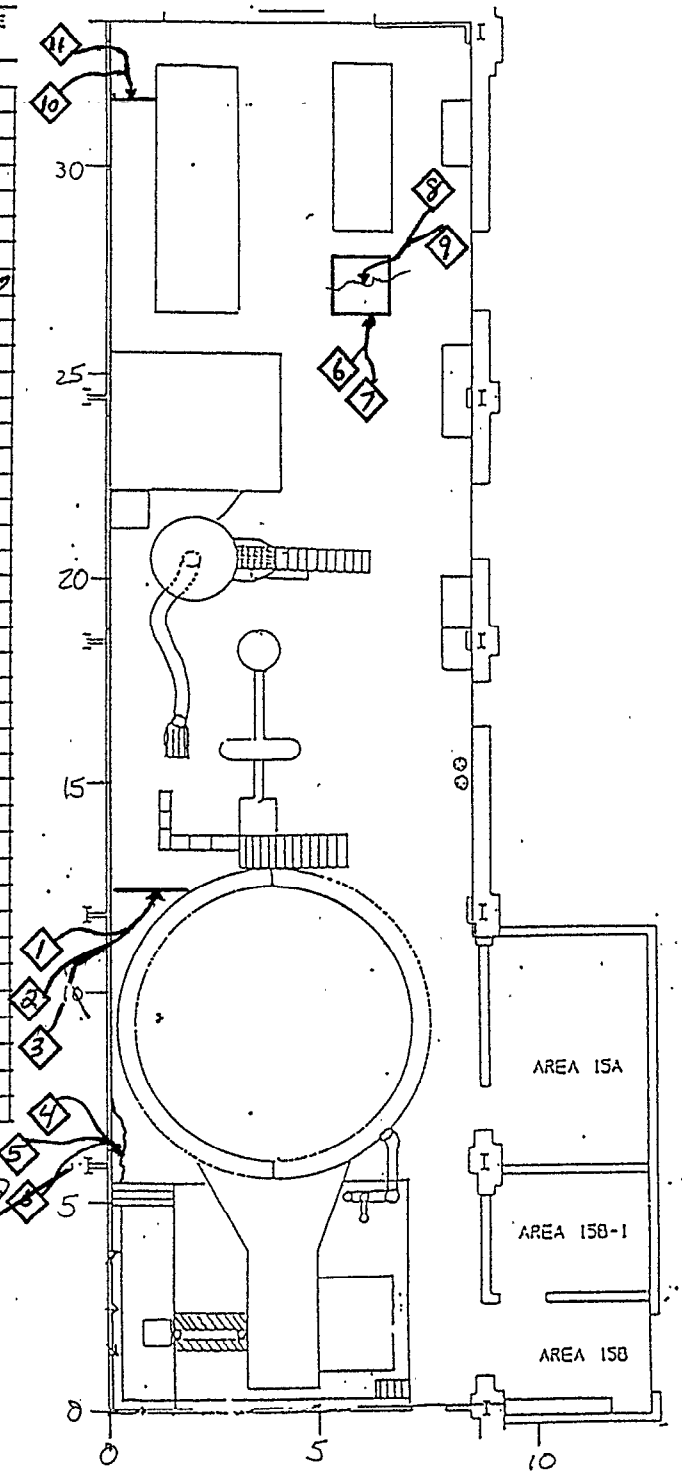

KEY:
◇# = DIRECT PROBE (15.5 cm²/130) MEASUREMENT LOCATION

William W.
6-25-97

Instrument Model & s/n:	⑧ L2221 w/44-9
Detector Model & s/n:	
Calibration Date:	
Efficiency	cpm / dpm based on S/Y90 = .20
Detector Area	cm2 = 15.5

REVIEW

ION TECHNOLOGY, INC.
640 Maple Ave
Saratoga Springs, NY
(518) 584-0166

RADIOLOGICAL SURVEY

Project: PRAX AIR
Area: BLDG 14

Date/Time 10-17-97	Tech D. PITMAN	Instrument / sn 2221/44-9 89648	
Location/ Purpose Area 15 PLATFORM Daily		Survey # 907	RWP# 02

BLDG 14
AREA 15
FLOOR/CEILING

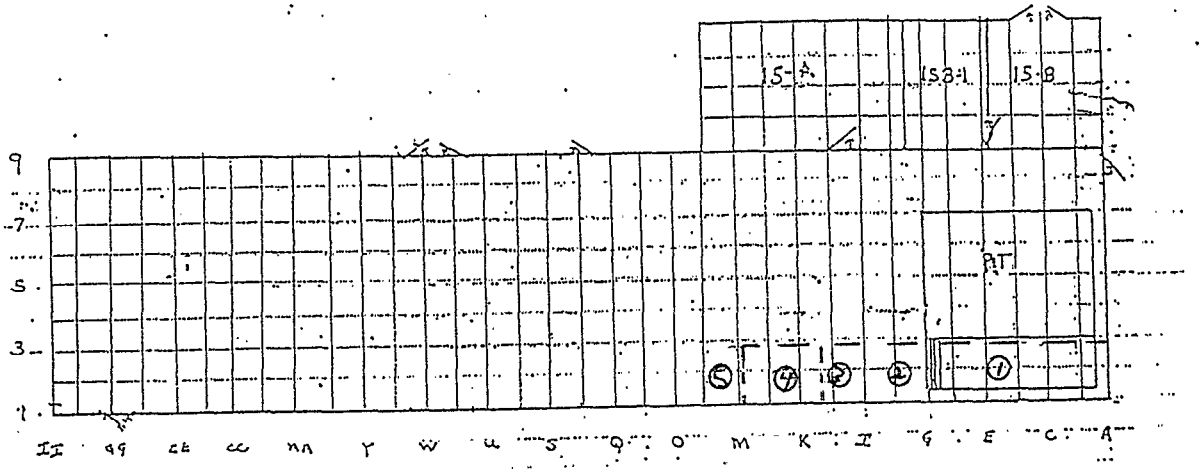

O=100 cm² Swipe Location

SCALE - 1/4" = 1 METER

Loc	Type	Description	Gross	α dpm	Gross	β dpm	Loc	Type	Description	Gross	α dpm	Gross	β dpm
1	S		0	0	50	-46							
2	S		0	0	55	-29							
3	S		0	0	54	-32							
4	S		0	0	45	-64							
5	S		0	0	50	-46							

Type: s = smearable; dp = direct probe
Comments:

Scalar S/N 91254		BKD	EFF	MDA
CT= 1'	DATE 10-21-97 α:	0.17	0.32	1.4
Tech D. PITMAN	β:	63	0.28	141

Review:

Encl 3.3 to HSP 210

ION TECHNOLOGY, INC.
640 Maple Ave
Saratoga Springs, NY
(518) 584-0166

RADIOLOGICAL SURVEY

Project: PRAXAIR
Area: Bldg 14

Date/Time 10-20-97	Tech D. PITMAN	Instrument / sn 2221/44-9 → 86308	
Location/ Purpose Area 15 PLATFORM Daily		Survey # 908	RWP# 02

BLDG 14
AREA 15
FLOOR/CEILING
N

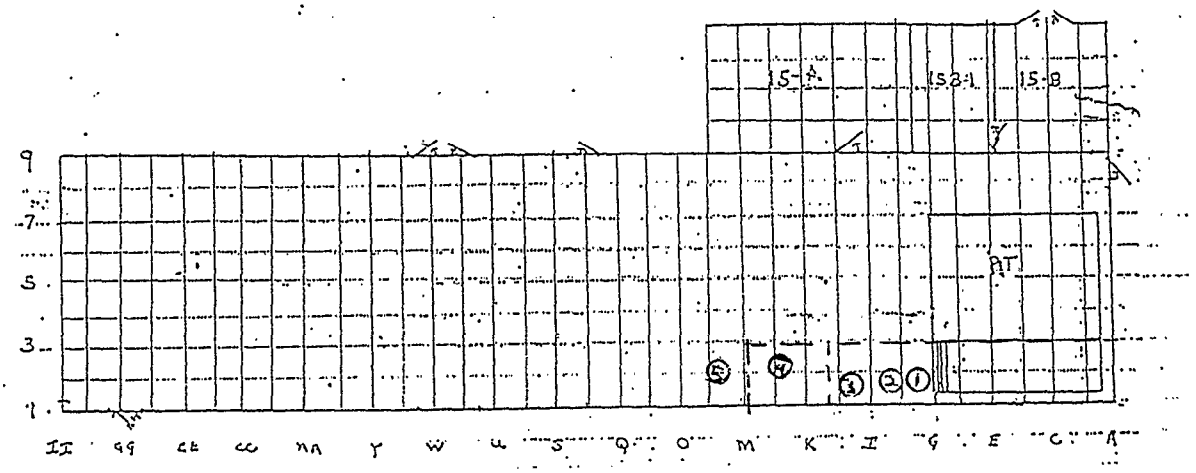

① = 100cm² swipe location

SCALE: ¼" = 1 METER

Loc	Type	Description	Gross	α dpm	Gross	β dpm	Loc	Type	Description	Gross	α dpm	Gross	β
1	S	CSCA	0	0	57	-21							
2	S	CSCA	1	3	47	-57							
3	S	CSCA	0	0	73	36							
4	S	CPA	0	0	57	-21							
5	S	uncontrolled.	0	0	67	14							

Type: s = smearable; dp = direct probe

Comments:

		BKD	EFF	MDA
Scalar S/N 91234				
CT#. 1 DATE 10-21-97	α:	0.17	0.32	14
Tech D. PITMAN	β:	63	0.28	111

Review:

Encl 3.3 to HSP 210