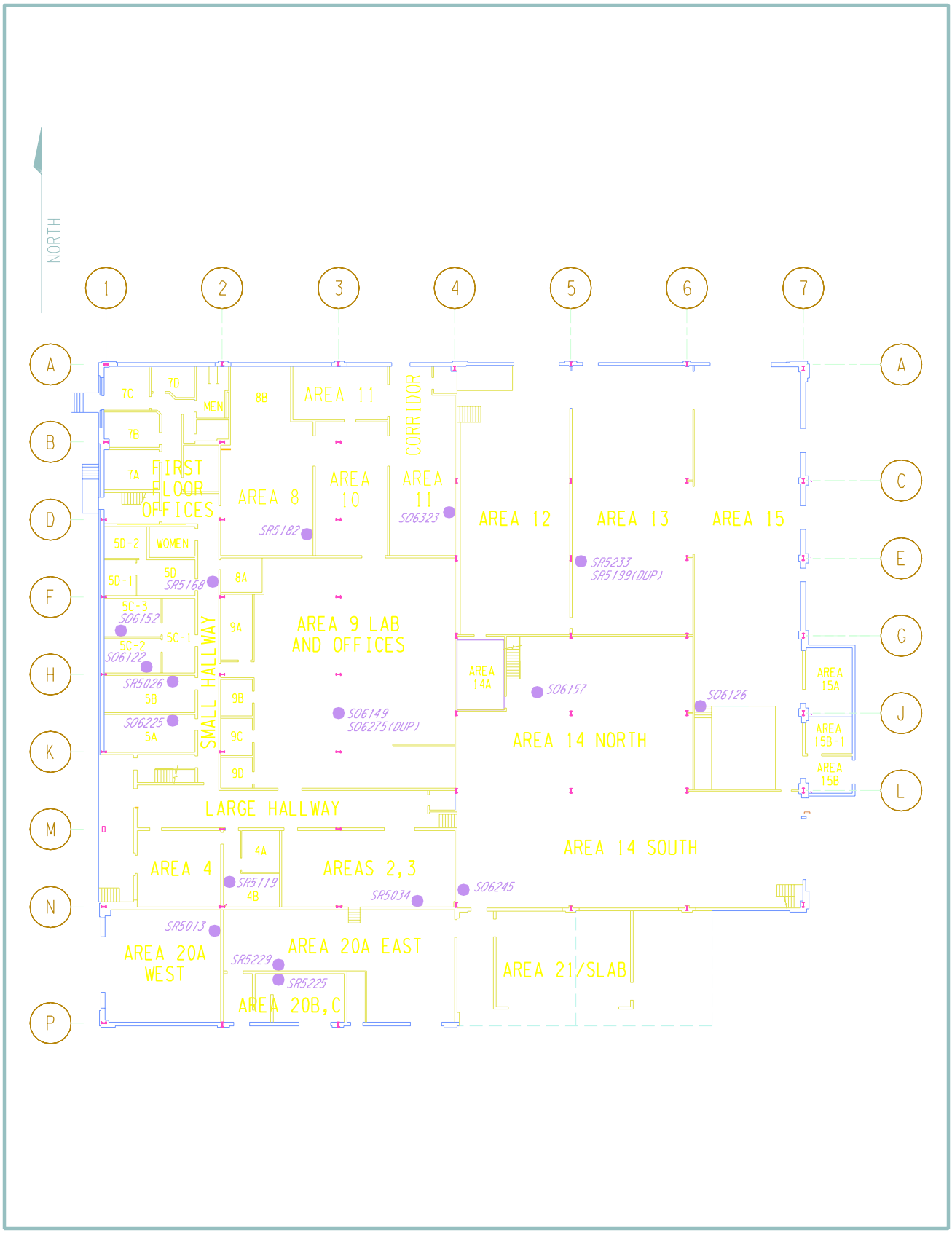

129F076.DGN

Figure 4.18-1
Linde Site - Building 14
Radon Sample Location Map