Probabilistic Model of Ammonia and Toxicity Status for Urban Lake

FILE COPY

By Rakesh K. Gelda,[1] Steven W. Effler,[2] and Susan M. O'Donnell[3]

Abstract: The development of a probabilistic modeling framework to conduct a priori simulations (forecasts) of the concentration of total ammonia (T-NH_3) and status with respect to toxicity standards and criteria is documented for ammonia-polluted Onondaga Lake, Syracuse, N.Y. This framework utilizes a previously tested mass balance nitrogen model, long-term (27 year) simulations, and the Monte Carlo technique. Variability is accommodated, based on long-term records, for several parameters and forcing conditions, including (1) tributary runoff, (2) in-lake vertical mixing, (3) in-lake rate of nitrification, (4) T-NH_3 concentration in the effluent of a wastewater-treatment plant, (5) lake pH, and (6) lake temperature. The probabilistic framework performed well in simulating the broad variations in T-NH_3 concentrations observed in the lake over a 6-year period (1989–1994). The major sources of the observed interannual variability in the lake's T-NH_3 pool are demonstrated to be natural variations in runoff and the irregular occurrence of "nitrification events" during fall mixing. Predictions are presented in the form of frequency distributions of T-NH_3 concentrations and violations/exceedances of the standard/criterion, consistent with the format of U.S. Environmental Protection Agency toxicity criteria. Application of the probabilistic model is recommended for the total maximum daily load analysis that will establish the T-NH_3 limit for the wastewater-treatment plant effluent.

INTRODUCTION

Mathematical models have become integral components of water quality research and management programs. Models with demonstrated credibility are necessary to meet critical societal needs to provide predictive capabilities to guide the evaluation of rehabilitation alternatives for impacted systems (Thomann and Mueller 1987; Chapra 1997). Water quality managers often need to predict the ecosystem response to such possible future scenarios as increased levels of waste treatment. Such forecasts are described as a priori (Bierman and Dolan 1986) simulations. These projections require not only reliable model frameworks that can support predictions over a wide range of alternatives, but also appropriate specification of important inputs of mediating conditions, including their inherent variability. An important and timely example is the central role a priori model simulations play in the total maximum daily load (TMDL) process that establishes load (point and nonpoint) allocations ($kg \cdot d^{-1}$) for pollutants/toxicants necessary to meet standards in "water quality limited" surface waters (EPA 1991a).

A number of important model inputs vary substantially. Point source inputs are rarely uniform in time, but instead may be subject to variation associated with manufacturing and plant operation cycles and influent characteristics. The appropriate specification of such ecosystem forcing data as meteorology, runoff, and other ambient conditions can be even more problematic. These drivers demonstrate wide variations in many regions that can strongly modify measures of water quality (Effler et al. 1986; Lam et al. 1987; Auer and Effler 1989; Owens et al. 1998). Variations in meteorological and runoff conditions are best specified by long-term records (for example, Owens et al. 1998), rather than synthetic creations.

Precedents exist to specify forcing conditions accepted as critical by managers for certain model state variable/ecosystem situations. For example, the specification of low flow and high temperature conditions for evaluation of the assimilative capacity of streams and rivers for oxygen-demanding discharges (Thomann and Mueller 1987). Selection of appropriate critical conditions, however, becomes more difficult as complexity increases, such as in lakes and reservoirs. Long-term records of meteorology, runoff, and related in-lake conditions provide opportunities to represent the effects of natural variations in these important forcing conditions in a priori model simulations (for example, Effler and Owens 1986; Owens and Effler 1989). Simulations for such long-term records with tested models can be analyzed to predict the expected variability of water quality, in response to natural variations in forcing conditions. Statistical analyses of simulation output and distributions formed by the predictions can provide a summary of environmental variability, thereby providing an objective basis for setting management goals (for example, Canale and Effler 1989; Owens et al. 1998).

Ammonia is an important water quality constituent, particularly in systems that receive discharges from domestic wastewater-treatment plants (WWTPs), because this constituent (1) is the preferred form of nitrogen (N) to support phytoplankton growth (Wetzel 1983; Harris 1986); (2) can contribute to the depletion of dissolved oxygen (DO) through the nitrification process (Hall 1986; Gelda et al. 2000); and (3) can be toxic to aquatic life in rather low concentrations (EPA 1985; 1999).

The focus of this work is the potential toxicity of ammonia in aquatic systems. This issue has received substantial attention from the EPA in recent years, as demonstrated by the five revisions of the national ammonia toxicity criteria over the last 15 years (EPA 1985; 1996; 1998; 1999; Heber and Ballentine 1992). Changes in the criteria have recently been reviewed by Matthews et al. (2000). The behavior of ammonia in aquatic systems can be rather complex, as several biochemical processes, influenced by various ambient environmental conditions, affect the pool of this constituent (Thomann and Mueller 1987; Canale et al. 1996; Chapra 1997).

The most widely used analytical techniques for determining ammonia measure total ammonia (T-NH_3). This analyte is composed of two chemical forms: free (or un-ionized) ammonia (NH_3) and ammonium ion (NH_4^+). The distribution between these two forms, usually determined by equilibrium calculations, is regulated primarily by pH, secondarily by temperature (T) (Emerson et al. 1975), and, to a lesser extent, by ionic strength (Messer et al. 1984). The equilibrium shifts

[1]Res. Engr., Upstate Freshwater Inst., P.O. Box 506, Syracuse, NY 13214. E-mail: rkgelda@upstatefreshwater.org

[2]Res. Engr., Upstate Freshwater Inst., P.O. Box 506. Syracuse, NY 13214.

[3]Res. Engr., Upstate Freshwater Inst., P.O. Box 506, Syracuse, NY 13214.

Note. Discussion open until March 1, 2002. To extend the closing date one month, a written request must be filed with the ASCE Manager of Journals. The manuscript for this paper was submitted for review and possible publication on November 23, 1999; revised January 5, 2001. This paper is part of the *Journal of Water Resources Planning and Management*, Vol. 127, No. 5, September/October, 2001. ©ASCE, ISSN 0733-9496/01/0005-0337–0347/$8.00 + $.50 per page. Paper No. 22147.

toward greater contributions of NH_3 (to T-NH_3) as pH and T increase. Free ammonia is much more toxic to aquatic life than NH_4^+ (EPA 1985; 1998). The earlier criteria to protect against toxic effects [for example, Heber and Ballentine (1992); EPA (1985); (1996)] were expressed primarily in terms of NH_3, as a function of pH and T. Recent criteria (EPA 1998; 1999) are expressed in terms of T-NH_3.

This paper reports on the development of a probabilistic modeling framework to support a priori simulations of T-NH_3 concentrations and status with respect to the state standard and national chronic toxicity criterion [for example, EPA (1985); (1999)] for lakes. This framework (1) adopts a previously tested mechanistic model for N (Canale et al. 1996); (2) utilizes lake and tributary measurements made as part of a long-term monitoring program for an urban lake polluted with T-NH_3 (Onondaga Lake, N.Y.) (Effler 1996; Matthews et al. 2000); and (3) accommodates the influences of natural variations in meteorology, as manifested in tributary runoff and in-lake mixing, ambient pH and T, in-lake kinetic processes, and loads from a WWTP.

Predictions are presented in the form of frequency distributions of T-NH_3 concentrations and violations/exceedances of the standard/criterion. Predicted seasonal variations in T-NH_3 concentrations are compared to variations observed over a 6-year period. This framework is applied to evaluate the relative importance and character of sources of interannual variability in the T-NH_3 pool of the lake. Simulations are presented for both prevailing conditions and for a WWTP discharge management scenario. The framework is appropriate to support a TMDL analysis [for example, EPA (1991a)] for ammonia for the lake. The utility of the framework and the underlying strategy for supporting related management deliberations and actions is considered.

SYSTEM DESCRIPTION

Onondaga Lake is located in metropolitan Syracuse, N.Y. This dimictic lake has a surface area of 12 km^2, a mean depth of 10.9 m, and a maximum depth of 19.5 m (Fig. 1). The lake's single outflow enters the Seneca River (Fig. 1). The lake was oligo-mesotrophic before European settlement in the late 1700s (Rowell 1996) and supported a commercially viable cold-water fishery until the late 1800s (Tango and Ringler 1996). Onondaga Lake has received the domestic waste and much of the industrial waste generated within its watershed (642 km^2) since development of the region (Effler and Harnett 1996; Effler and Hennigan 1996). The resulting degradations of the lake eliminated uses of the resource by the community. Ice harvesting was banned in 1901, swimming in 1940, and fishing in 1970 (Effler and Harnett 1996). The lake's watershed presently has a population of ~450,000.

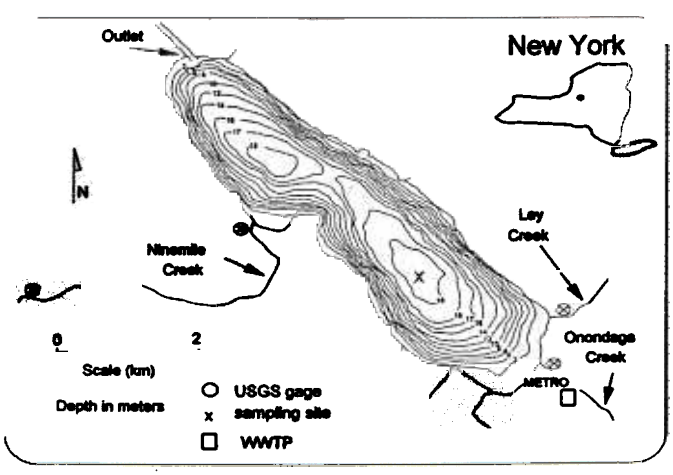

FIG. 1. Onondaga Lake: Bathymetry (contours in meters), Tributaries, Wastewater Treatment Plant (METRO), and Sampling Sites

Treated municipal waste is discharged to the southern end of the lake (Fig. 1) from the Metropolitan Syracuse Wastewater Treatment Plant (METRO). METRO is the dominant source of N and phosphorus (P) to the lake, presently representing about 80, 90, and 60% of the total annual external loads of total N, T-NH_3, and P, respectively (Effler et al. 1996a). The prevailing annual areal loads of P (~8 $g \cdot m^{-2} \cdot y^{-1}$) and N (~200 $g \cdot m^{-2} \cdot y^{-1}$) (Effler et al. 1996a) are among the highest reported in the literature (Brezonik 1972; Stauffer 1985). Though METRO was not intended to attain significant ammonia treatment, substantial nitrification has been achieved during the warmer summer months within the facility since the mid-1980s (Effler et al. 1996a). This causes seasonal shifts in the contributions of T-NH_3 and oxidized forms of N [nitrate (NO_3^-) and nitrite (NO_2^-); sum of NO_3^- and NO_2^- = NO_x] to the facility's N load. Major interannual differences in the extent of nitrification have been common at the facility (Effler et al. 1996a; Gelda et al. 1999).

Onondaga Lake is extremely eutrophic because of the METRO P load and suffers from related degradations in clarity and oxygen resources (Effler et al. 1996a). Inputs of T-NH_3 from METRO caused (Brooks and Effler 1990; Canale et al. 1996) violations of the state standard and exceedances of national ammonia criteria (chronic and acute) in the upper waters of the lake annually during the 1989–1998 interval (Matthews et al. 2000). These violations and exceedances were severe with respect to their margin (ratio of measured concentration to standard or criterion value; ratio >1.0 is a violation or exceedance) and duration. Margins of violation/exceedance have been greatest over the spring to midsummer interval (Matthews et al. 2000). Concentrations of T-NH_3 > 2 $mgN \cdot L^{-1}$ have been common in the upper waters, and maxima of ~4 $mgN \cdot L^{-1}$ have been observed in these layers (Matthews et al. 2000). Substantial year-to-year differences in temporal patterns have been reported for the upper waters, particularly with the approach to fall turnover (Matthews et al. 2000).

The differences during fall mixing have been attributed largely to interannual variations in nitrification in the lake (Gelda et al. 2000). Differences during summer have been associated with interannual variations in the extent of nitrification at METRO and the timing and magnitude of phytoplankton growth (Matthews et al. 2000). Ammonia concentrations increase progressively in the hypolimnion, particularly after the onset of anoxia, largely in response to release from the sediments (Effler 1996; Wickman 1996). The peak volume-weighted hypolimnetic T-NH_3 concentration observed annually, before the onset of fall mixing, has been 4 to 5 $mgN \cdot L^{-1}$ (Effler 1996). Violations of the chronic ammonia standard occur in these lower layers, but the margins are generally smaller than for the epilimnion because pH is lower in the hypolimnion (Effler et al. 1990). Anoxia is the primary resource-limiting condition for Onondaga Lake's hypolimnion.

MODELING

Framework/Strategy

A probabilistic modeling framework was developed to simulate T-NH_3 concentrations and status with respect to the toxicity standard/criterion. A mechanistic mass balance model for nitrogen (N) was used with probabilistic forms of inputs to generate probabilistic predictions of T-NH_3. The probabilistic framework accommodates the following sources of variability in support of the a priori simulations: (1) runoff, (2) vertical mixing, (3) in-lake nitrification, (4) METRO T-NH_3 load (that is, nitrification in the facility), (5) lake pH, and (6) lake temperature. The strategy was to combine distributions of simu-

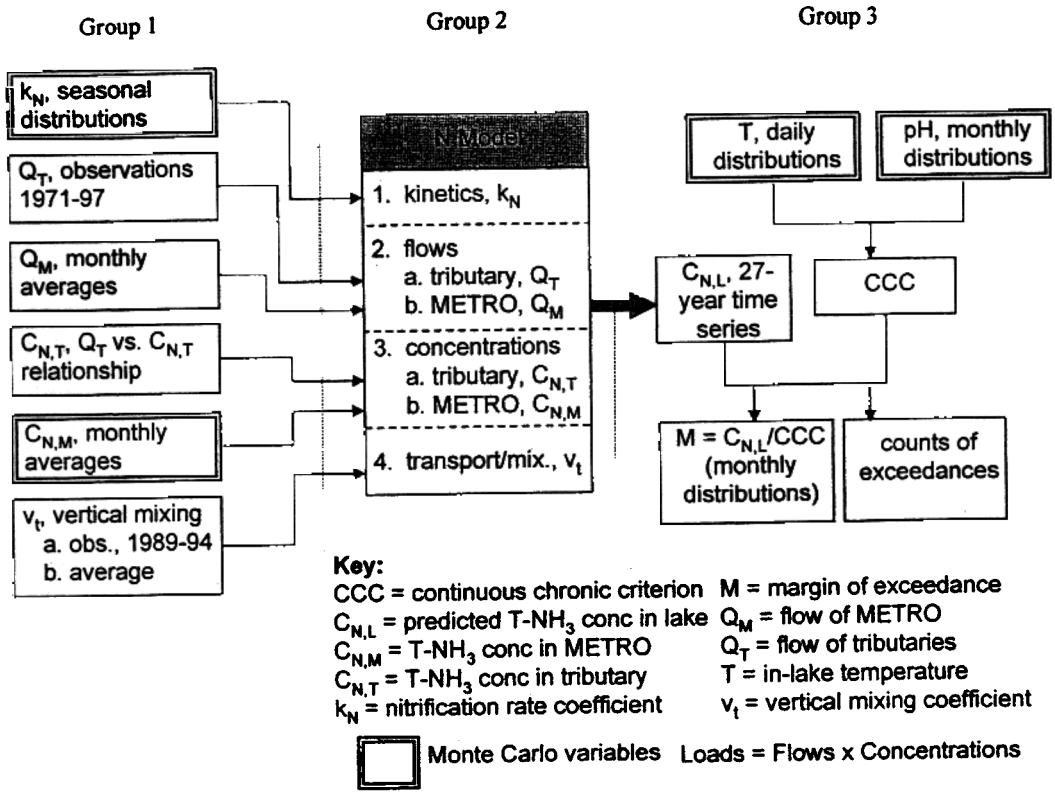

FIG. 2. Probabilistic Modeling Framework for Simulations of Total Ammonia (T-NH_3), and Status with Respect to Chronic Ammonia Criterion, for Onondaga Lake

lated T-NH_3 concentrations and values of the standard/criterion to predict the status of the upper waters of the lake with respect to the toxicity limits (Fig. 2) for the critical interval (Matthews et al. 2000) of April–October. Features of the long-term monitoring program for the lake and its tributaries supporting this analysis have been described elsewhere [for example, Brooks and Effler (1990); Effler (1996); Matthews et al. (2000)]. In Fig. 2, Group 1 specifies inputs to the N model; Group 2 depicts the components of the N model that relate to the inputs from Group 1; and Group 3 depicts the protocol for probabilistic calculations of the margin of exceedance of the CCC.

The T-NH_3 predictions incorporate sources of variability in two ways. The first may be described as a long-term continuous simulation approach [for example, EPA (1991b)]. Long-term data sets for tributary flow and vertical mixing are used to drive multiple-year simulations to quantify the variability caused by natural variations in these forcing conditions (Fig. 2). Changes in material loading from the tributaries associated with variations in flow are calculated based on prevailing flow/concentration relationships (Fig. 2). According to this approach, model simulations are driven with an entire long-term record of real observations rather than with an arbitrarily selected subset of measurements that may be believed to be "critical" (Chapra 1997; Owens et al. 1998).

The long-term continuous simulation approach has a number of attributes: (1) the specified forcing conditions are inherently representative within the region of measurement; (2) distributions of predictions of model state variables are generated from the simulations, which represent the effects of natural variations in these ecosystem drivers; (3) critical forcing conditions (associated with certain return frequency occurrences specified by managers) can be objectively identified within the long-term record, based on the results of the simulations (Canale and Effler 1989); and (4) insights into system and constituent behavior may emerge from analysis of such long-term simulations (Owens and Effler 1989). Such simulations have been conducted in several instances (Effler and Owens 1986; Owens and Effler 1989; Stefan et al. 1993; Owens et al. 1998) to resolve the relative impacts of natural meteorological variability versus anthropogenic effects on the stratification regime and water quality.

The second probabilistic approach is Monte Carlo simulations, used here to accommodate the effects of interannual stochastic variations in nitrification in the lake (Gelda et al. 2000) and in METRO on lake T-NH_3 concentrations, and to calculate the criterion or standard from distributions of pH and T based on long-term measurements for the upper layers of the lake (Fig. 2). This approach is useful where long-term data are not available to represent uncertainty/variability explicitly. The necessary probability distributions are specified from the population of independent estimates of the rate of in-lake nitrification (k_N, d^{-1}) (Gelda et al. 2000), our review of the interannual variations in effluent characteristics of METRO [for example, Effler et al. 1996(b)], and long-term measurements of pH and T (Effler 1996; Matthews et al. 2000). Accordingly, values of each of four Monte Carlo variables (Fig. 2) are randomly selected for each day of simulation from the specified distributions. These populations were found to be essentially independent of each other, with the time segmentation scheme adopted in this framework (described subsequently). Probabilistic simulations of T-NH_3 concentrations are produced daily, according to this modeling strategy (Fig. 2).

Values of the existing New York State standard for T-NH_3 to protect against chronic effects are calculated for each day of simulation of T-NH_3 concentration from the specified distributions of pH and T (Fig. 2). These correspond to the values of the national continuous chronic criterion (CCC) established for nonsalmonid systems in a guidance document prepared by EPA (1985). Values are calculated for the months April–October, the interval for which the potential for ammonia toxicity is greatest (Matthews et al. 2000), and for which the most comprehensive field measurements are available (Effler 1996).

Margins of violation are calculated for each day in the April–October interval from paired distributions of predictions of T-NH_3 and CCC (Fig. 2). Status with respect to more recent EPA guidance criteria [for example, EPA (1998; 1999)] can be readily determined through calculation of the alternate CCC values from the same distributions of pH and T.

Description of N Model

The mechanistic N model developed specifically for Onondaga Lake (Canale et al. 1996) has been incorporated in the probabilistic framework (Fig. 2). This mass balance model (Canale et al. 1996) represents the lake's water column as two completely mixed vertical layers of fixed dimensions (demarcation depth of 8.5 m), an upper mixed layer (UML) and lower mixed layer (LML), corresponding approximately to the dimensions of the epilimnion in summer (Effler 1996). This simple vertical segmentation has been widely used in mass balance simulation models for stratifying lakes (Thomann and Mueller 1987; Chapra 1997). The two model layers are connected by vertical mixing-based exchange.

The model (Fig. 3) simulates concentrations of T-NH_3, NO_x, particulate organic N (PON), and dissolved organic N (DON). Pathways in the lake's N cycle (Fig. 3) included in the model are external loading, export from the basin, net phytoplankton growth, nitrification, denitrification, hydrolysis of DON to T-NH_3, decomposition of PON, volatilization of free ammonia, sediment release of T-NH_3, settling of PON, and vertical mixing-based exchange between the UML and LML (Canale et al. 1996). The energetically favored preferential uptake of T-NH_3, instead of NO_x, by phytoplankton (Wetzel 1983) is accommodated. Kinetic representation of the processes and mass balance expressions for this model were presented by Canale et al. (1996). The model design has similarities to earlier N models (for example, state variables, N cycle pathways) (Canale et al. 1976; DiToro and Connolly 1980). Model development and testing were supported by the independent determination of several model coefficients based on field and laboratory experiments (Canale et al. 1996). The model was originally tested for the different forcing conditions and in-lake concentration patterns documented for 1989 and 1990 (Canale et al. 1996). Testing and application of the model were subsequently extended (Gelda et al. 2000; Effler et al. 2001).

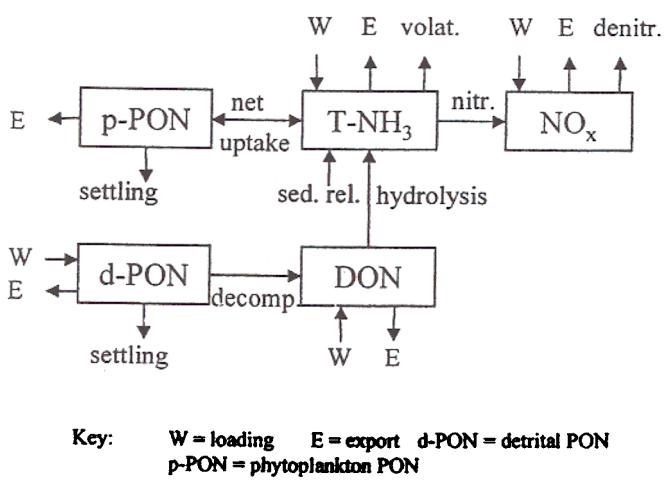

FIG. 3. Conceptual Nitrogen Model for Onondaga Lake (Modified from Canale et al. 1996). Interaction of T-NH_3 with p-PON (Phytoplankton) Is Accommodated as "Net" Process. Other Sources of T-NH_3 Include Sediment Release and Hydrolysis of Dissolved Organic N (DON); Sinks Include Nitrification and Volatilization (NH_3)

Effects of Meteorological, Treatment, and Biochemical Variability

Runoff

The hydrology of Onondaga Lake has been well quantified. Approximately 90% of the surface inflow has been continuously gauged since the early 1970s (Effler and Whitehead 1996); a 27-year record is utilized here. Direct groundwater

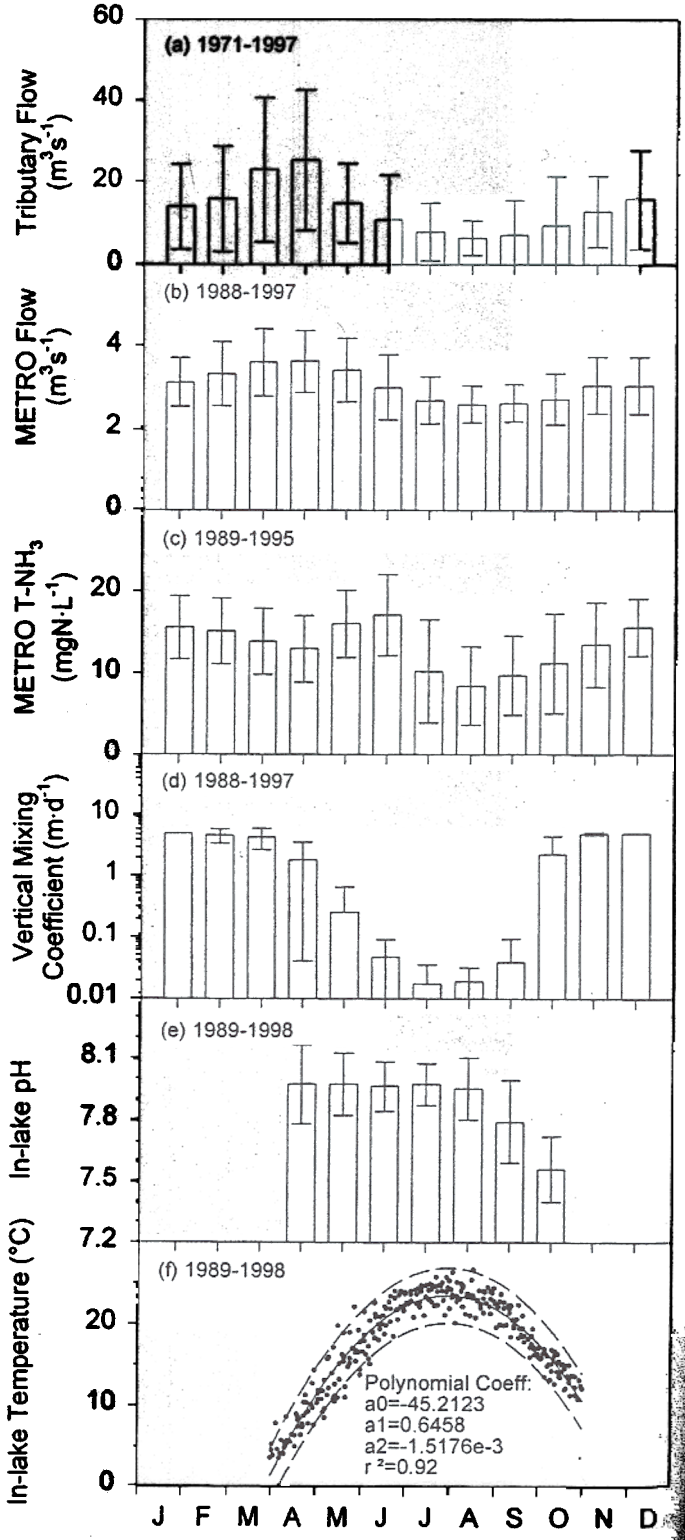

FIG. 4. Seasonal and Interannual Variations in Forcing Conditions for Total Ammonia (T-NH_3) Concentrations, and Status with Respect to Chronic Ammonia Criterion, for Onondaga Lake

inputs to the lake basin are insignificant (Effler and Whitehead 1996). The largest sources of water annually to the lake are Ninemile Creek and Onondaga Creek (Fig. 1), which together contribute ~60% of the inflow.

These two tributaries and two other fluvial inflows have U.S. Geological Survey gauges near their mouths (Fig. 1). Discreet measurements of flow in the ungauged tributaries (~10% of total inflow) were found to be well correlated to gauged flows (Effler and Whitehead 1996); summed tributary flows were multiplied by 0.116 to estimate the ungauged inflow in the analyses presented here. Hydrologic fluxes associated with direct precipitation and evaporation at the lake's surface are approximately in balance on an annual basis and small relative to the summed rate of surface inflow (Effler and Whitehead 1996), and thus have not been considered here. The surface elevation of the lake remains relatively constant; that is, the sum of surface inflows equals the outflow.

Major seasonal and interannual variations occur in hydrologic loading to Onondaga Lake [Fig. 4(a)] that are observed widely for other lakes. Tributary flows (based on USGS records) are greatest in March and April and lowest in the July–September interval. Interannual variations in runoff are particularly great in spring [Fig. 4(a)]. The lake flushes rapidly, with an average (1971–1997) completely mixed flushing rate of 4.0 flushes$\cdot y^{-1}$ (range of 2.4–6.2 flushes$\cdot y^{-1}$). The lake flushed on average 1.1 times during March and April over this 27-year interval.

METRO is the third largest source of water (average flow ~3.5 $m^3 \cdot s^{-1}$) to Onondaga Lake, representing nearly 20% of the total inflow on an annual basis; this discharge is often the single largest inflow in late summer (Effler and Whitehead 1996). The average seasonality of this inflow [Fig. 4(b)] reflects the temporal pattern of runoff in the watershed (based on facility permit reports) [Fig. 4(a)], as mediated through the community's combined sewer system. The relative magnitude of seasonal and interannual variations in the METRO flow is, however, substantially less than for the tributaries.

Material Loads

Loads of T-NH_3 and organic N are required to drive the model (Fig. 3). The tributary loads are generated as the product of daily average tributary flows and concentrations for the entire 27-year flow record (Fig. 2). The concentrations are obtained from flow-concentration relationships determined for the various tributaries that are representative of prevailing conditions (Effler and Whitehead 1996). A dilution model relationship (concentration increases with decreases in flow) [for example, Effler et al. (1996b); Johnson (1979); Manczak and Florczyk (1971)] prevails between T-NH_3 concentration and stream flow at the mouth of Ninemile Creek, associated with residual inputs from soda ash production (Effler et al. 1991). Concentrations have been observed to be generally independent of flow in the other tributaries (Effler and Whitehead 1996). While some uncertainty in the tributary loads accompanies these representations, this has no significant effect on predictions for Onondaga Lake, because these nonpoint inputs remain minor compared to those from METRO. It may be necessary to accommodate these sources of uncertainty in the probabilistic framework for systems where nonpoint inputs are more important.

Time series of METRO effluent T-NH_3 concentrations were formed for two 12-month intervals, each with segments of 1 month (that is, monthly average concentrations), based on analysis of 7 consecutive years (1989–1995) of data (5 days per week, on volume-weighted samples, reported as part of permit requirements) [Fig. 4(c)]. The conditions observed in 2 years, 1989 and 1993, were selected as representative of the variation in effluent conditions. Substantial nitrification occurred over the July–October interval of 1989 (Effler et al. 1996), while high T-NH_3 concentrations persisted in the effluent throughout 1993 (unpublished data). These two time series were considered equally likely (that is, 50% probability) under existing conditions. The single management scenario addressed here assumes a 50% reduction in concentrations in each month of these two time series.

Vertical Mixing

Meteorological conditions can further influence features of water quality by regulating the stratification/mixing regime of lakes (Effler et al. 1986; Lam et al. 1987; Owens and Effler 1989). Interannual variations in features of stratification, such as vertical mixing, duration of stratification and temperature of the layers, occur in Onondaga Lake as a result of natural variations in meteorology (Owens and Effler 1989; Effler and Owens 1996). An aspect of this variability is represented here by time series of the vertical mixing coefficient (v_t; $m \cdot d^{-1}$) [Fig. 4(d)l], determined by applying a heat balance to the LML, according to the protocol of Doerr et al. (1996). The N model uses v_t and the concentration gradient between the UML and LML to calculate the upward flux from the enriched lower layers to the upper waters (Canale et al. 1996). A 10-year record of weekly T profiles collected over the April–October interval for the 1988–1997 period, at a site (Fig. 1) found to be representative of lakewide conditions (Effler 1996; Effler and Owens 1996), supported determinations of v_t.

Certain seasonality features observed here [Fig. 4(d)] are recurring and widely observed for north temperate lakes [for example, Thomann and Mueller (1987); Chapra (1997)]. Minimal vertical mixing occurred in midsummer when stratification was strongest, while v_t was higher in spring and fall when stratification was weaker [Fig. 4(d)]. A value of $v_t = 5\ m \cdot d^{-1}$ was applied (Doerr et al. 1996) from late fall to late winter [Fig. 4(d)]. This high value essentially converts the two-layer framework to a one-layer (that is, vertically well mixed) system over this interval (Doerr et al. 1996).

In-Lake Nitrification

Some level of uncertainty is unavoidable for the model's representation of each of the biochemical source and sink processes for T-NH_3 and the determination of related coefficient values (Canale et al. 1996). Only the effects of variability/uncertainty in nitrification (k_N) are considered here (Fig. 2) because the T-NH_3 pool of the lake, and model simulations of

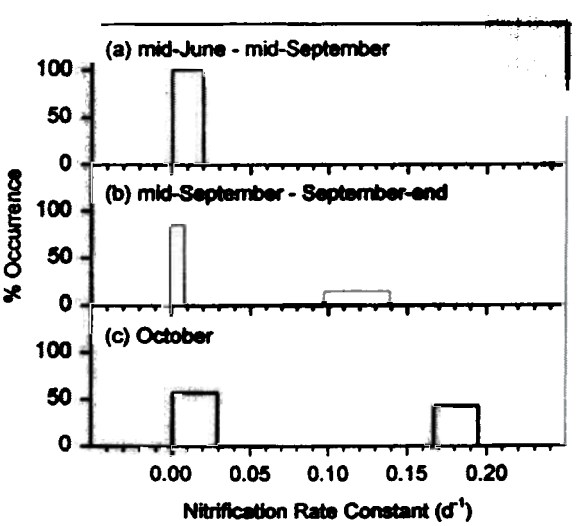

FIG. 5. Distributions of Nitrification Rate Constant (k_N) in Onondaga Lake for Three Time Segments

this constituent, are by far the most sensitive to the variations observed in this process (Gelda et al. 2000).

Gelda et al. (2000) documented the irregular occurrence of "nitrification events" (abrupt increase) in 3 of the 7 years with the approach to fall turnover (mid-September through October). The value of k_N remained near zero during this interval in the other 4 years. That analysis was extended here to estimate k_N values for the April–July interval of the same years to support this modeling effort. The value of k_N was found to be close to zero over the April to mid-June interval of all 7 years (Gelda et al. 1999). Distributions of k_N were established for three time segments, mid-June to mid-September [Fig. 5(a)], mid-September to the end of September [Fig. 5(b)] and October [Fig. 5(a–c)]. A uniform distribution was established for the first segment for a comparatively small range of low values of k_N [Fig. 5(a)]. Bimodal distributions were established for the later two segments [Fig. 5(b and c)] to represent the eventlike character encountered for the lake during the fall mixing period (Gelda et al. 2000). The value of k_N was assumed to equal zero for the interval of November–March because of the well-known dependency of nitrification on temperature [for example, Thomann and Mueller (1987); Canale et al. (1996)]. This assumption is further supported by the successful simulation of T-NH_3 concentrations at spring turnover with k_N set to zero, from initial conditions established at the preceding fall turnover (Effler et al. 2001).

Specification of pH and T

A 10-year (1989–1998) database of weekly pH and T profiles (Matthews et al. 2000) collected over the April–October interval at the representative site (Fig. 1) was used to specify the distributions of these parameters for the UML (Fig. 2). The single pH and T values adopted from each profile (1 m interval of measurements) for this analysis were the averages over the 0 to 4 m depth interval (pH from average [H^+]) (Matthews et al. 2000). Further deepening of the depth interval of averaging resulted in values for certain intervals that were not protective of substantial portions of the epilimnion (Effler 1996). According to this protocol, approximately 40 observations were available to define the prevailing distributions of pH within the upper waters of Onondaga Lake for each month over the April–October interval. Values of pH remain well above neutral in the epilimnion of this alkaline lake [Fig. 4(e)]. No systematic shifts in pH have occurred during the 10-year period (Matthews et al. 2000). On average, pH has been rather uniform over the April–August interval [Fig. 4(e)]. Depression in pH has occurred annually in the UML during the fall mixing period [Fig. 4(e)] in response to entrainment of CO_2 and various reduced species (Driscoll et al. 1994; Effler 1996). The substantial interannual differences observed in short-term temporal structure (for example, Matthews et al. 2000) support the monthly time segmentation adopted for pH.

The recurring seasonality of the T of the upper waters was represented by a polynomial fit of the 10 years of observations [Fig. 4(f)]. This relationship was used to specify the mean of a normally distributed population for each day over the April–October. The bounds of the daily distributions were established by assuming the 95% confidence limits of the polynomial fit [Fig. 4(f)] are equal to ±2 standard deviations.

Modeling Protocol

Initial conditions were specified on the first day of simulations as historic averages of the first observations in April. One hundred iterations were performed for the entire specified 27-year interval, resulting in 2,700 distinct predictions for each day, or 81,000 distinct predictions for each month. Accordingly, one of the two alternate METRO effluent time series of T-NH_3 concentrations was selected for each iteration. Values of k_N were drawn randomly according to the specified distributions (Fig. 5) for each year of simulations. The mid- to end of September and October selections were coupled; that is, if a high value was drawn for the September interval, then a high value was drawn for October (Gelda et al. 2000). A total of 2,700 predictions were made for each day of the year, according to the framework adopted here, to reflect prevailing conditions and evaluate the hypothetical management scenario [for example, Figs. 2 and 6(e)].

Monthly distributions of lake T-NH_3 predictions, presented subsequently to summarize selected features of the simulations, were based on ~81,000 (2,700 × 30) daily simulations. Increases in the number of iterations (n > 100) for Monte Carlo simulations did not significantly change the results. Reduction of the iterations to 10 (that is, 270 predictions for each day) decreased the predicted coefficient of variation (CV) by about 8% on an annual basis. Values of CCC were computed for each day of simulations for each of the Monte Carlo iterations from values of pH and T drawn randomly from their respective distributions. The margin of violation was calculated for each pair of simulated T-NH_3 concentration and calculated CCC values. Daily distributions of the margin were available, but these conditions are summarized here in monthly segments.

APPLICATION OF MODELING FRAMEWORK

Simulations of T-NH_3

Prevailing Conditions

The performance of the probabilistic framework in simulating the observed variability in the T-NH_3 pool of the upper waters of the lake was evaluated by comparing the predicted seasonal bounds to the population of observations [volume-weighted average concentration in UML (Matthews et al. 2000)] for the 1989–1994 period (Fig. 6). The range of observations of T-NH_3 over this interval was quite broad (Fig. 6). The relative contributions of the individual sources of variability are depicted here by sequential (cumulative) inclusion of the effects of variations in (1) runoff for the 1989–1994 interval [Fig. 6(a)]; (2) METRO effluent T-NH_3 concentration [Fig. 6(b)]; (3) in-lake nitrification rate (k_N) [Fig. 6(c)]; and (4) vertical mixing for the 1989–1994 interval [Fig. 6(d)]. All other inputs were specified according to values developed in the original testing of the N model (Canale et al. 1996).

The effects of natural variations in runoff bounded most of the observations reported in April and May over the 6-year interval [Fig. 6(a)]. The broad variations predicted over the January–April interval reflect the effects of the highly variable and elevated tributary flows over the November–April interval. Variations in lake T-NH_3 levels from runoff were predicted to be much smaller over the June–October interval [Fig. 6(a)]. Inclusion of the effects of interannual variations in the METRO effluent T-NH_3 concentration, represented by the two cases, broadened the range of predictions over the July–October interval [Fig. 6(b)]. These predictions bounded substantially more of the observations compared to accommodating the effects of runoff only [Figs. 6(a and b)].

Accommodating the major interannual differences in nitrification (k_N) within the lake greatly increased the predicted variability from July through fall, bracketing all but a few low observations over the interval [Fig. 6(c)]. The effects of interannual differences in vertical mixing in the lake were minor by comparison, though inclusion of this source of variability does result in essentially bounding all the low values observed in September and October [Fig. 6(d)]. These analyses indicate the probabilistic modeling framework (Fig. 2) performed well in representing the variations in T-NH_3 concentrations observed in the upper waters of Onondaga Lake [Fig. 6(d)].

(a) $\mu_p = 2.30$

$M_p = 2.23$

$\mu_{50} = 1.46$

$M_{50} = 1.40$

centrations exceeding 3 $mgN \cdot L^{-1}$ for this management scenario is essentially zero [shaded areas of Figs. 8(ac), (ad), (ae), and (ai)], a high degree of certainty if this was the established regulatory limit.

Violations of Chronic Standard

Prevailing Conditions

Values of pH in the upper waters of Onondaga Lake have been approximately normally distributed on a monthly basis [Figs. 8(h)–(n), based on measurements]. The average pH values presented were the values that correspond to the mean of the hydrogen ion concentrations ($[H^+]$). The occurrence of higher pH values in April [Fig. 8(h)] compared to May [Fig. 8(i)] and June [Fig. 8(j)] reflects the effects of severe phytoplankton blooms that have most often occurred in early spring (Effler 1996). The probability of pH exceeding 8.0 in the upper waters of the lake in April is nearly 45% [Fig. 8(h)]. The distributions of temperature reflect the annual heating cycle [Figs. 8(o–u), based on measurements]. Much of the apparent variability within the individual months shown for T is systematic, particularly in spring and fall, when rather rapid heating and cooling occur [Fig. 4(f)]. The distributions of CCC [Figs. 8(v–ab); output from Monte Carlo calculations; see Fig. 2] are broader in spring and narrowest in October, and the lowest mean values (that is, most stringent standards) occur in July and August.

The predicted distributions of the margin of violation were more skewed than the T-NH_3 predictions (differences between the mean and median values were within 15%) [Figs. 8(ac–ai)]. A distinct seasonality was predicted for the margin of violation and the extent of its variability [Figs. 8(ac–ai)]. The distributions of the margin for prevailing conditions progressively shifted to higher values from April to July [Figs. 8(ac–af)], reflecting the shift to lower CCC values over the same interval [Figs. 8(v–y)]. The distributions of the margin of violation shifted to lower values and were less variable from July to October [Figs. 8(af–ai)]. Under prevailing conditions the CCC was predicted to be exceeded more than 90% of the time in April, May, June, and July, consistent with observations (Matthews et al. 2000). The probability of violations in October under prevailing conditions was substantially lower (~50%) [Fig. 8(ai)]. This lower level has two contributing factors: the lower concentrations of T-NH_3 [Fig. 8(g)] and the lower pH values [Fig. 8(u)].

Management Scenario

The improvement in the status of the lake with respect to the standard that would occur from the specified 50% reduction in the T-NH_3 discharge from METRO is depicted by the systematic shifts in the frequency distributions for the margin of violation [for selected months, as shaded areas of Figs. 8(ac, ad, ae, and ai)], though substantial overlap with respect to prevailing conditions was predicted. This shift reflects solely the corresponding predicted reductions in lake T-NH_3 concentrations [Figs. 8(a, b, c, and g)], as the distributions of CCC remained unchanged from prevailing conditions for this scenario analysis. Systematic shifts in pH, such as those that could accompany a change in primary production/trophic state (Vollenweider 1974—for example, decreases in pH for reductions in primary production driven by reductions in nutrient loading) may need to be considered in poorly buffered systems. However, this is probably not an issue for Onondaga Lake because it is so well buffered (Driscoll et al. 1994). Predicted probabilities of violation for the management scenario considered here were about 60% for April [Fig. 8(ac), 80% for June [Fig. 8(ae)], and 35% for October [Fig. 8(ai)].

MANAGEMENT IMPLICATIONS

Toxicity Criteria, TMDLs, and Probabilistic Frameworks

State standards for toxic substances are usually based on criteria guidance provided by the EPA. Toxicity criteria developed by the EPA have three components (EPA 1991b): (1) magnitude—the allowable concentration; (2) duration—the averaging period for the allowable concentration; and (3) frequency—how often the criteria can be exceeded. These features are generally consistent with the character of response of aquatic biological communities to toxic substances (EPA 1991b).

The TMDL process has been established by EPA (1991a) as a quantitative regulatory framework to guide rehabilitation programs in meeting standards in systems designated as "water quality limited" (as per section 303d of the Federal Clean Water Act). A TMDL analysis is expected to accommodate critical environmental conditions and recurring features of seasonality (EPA 1991a). A water quality model provides the necessary quantitative linkage between external loads and receiving water concentrations of a toxicant in these analyses. The selected model needs to have not only scientific credibility, but also a structure that is consistent with the format of the standard/criterion (EPA 1991b). Simple steady-state models have been widely used, particularly for stream TMDL analyses. These model applications require specification of critical conditions, thereby implicitly introducing an unavoidable discretionary (or arbitrary) component into the analysis. More complex dynamic models embedded in probabilistic frameworks, as developed here, are desired (EPA 1991b) because (1) they reduce or eliminate arbitrary specifications; (2) they can accommodate and quantify effects of uncertainty in processes and natural variations in forcing conditions; and (3) model output can be made consistent with the format of EPA toxicity criteria (EPA 1991b).

Probabilistic Ammonia Model, Onondaga Lake

A probabilistic modeling framework has been developed here for Onondaga Lake to predict T-NH_3 concentrations and margin of violation of the state standard and exceedance of the national chronic toxicity criterion. The framework relies on an extensive database of measurements and calculations for the system that extends as long as 27 years. It accommodates the effects of variability in several forcing conditions, including (1) runoff, (2) vertical mixing, (3) in-lake nitrification rate, (4) ammonia concentration in the METRO effluent, (5) lake pH, and (6) lake temperature. The most important sources of variability for the lake's T-NH_3 pool are natural variations in runoff and the irregular occurrence of in-lake nitrification events during the fall mixing period. The modeling framework performed well in representing the wide variations in ammonia and margins of violation that have been observed in the upper waters of the lake. While this framework addresses a single pollutant and utilizes extensive system-specific information, the strategy had broad utility for different constituents and systems, particularly within the context of TMDL analyses.

The probabilistic output of the model, depicted as frequency distribution plots, provides managers with a realistic representation of environmental variability for this constituent and related violations/exceedances of the toxicity standard/criterion. A priori predictions of complete probability distributions, supported by the framework presented here, allow the risks inherent in alternate treatment strategies to be directly quantified. Model output has been evaluated to depict the important role antecedent tributary flow plays in regulating ammonia concentrations and status with respect to the standard/criterion in On-

ondaga Lake. Predictions of T-NH_3 for early spring in Onondaga Lake are largely insensitive to uncertainties in kinetic inputs to the model because of the high flushing rate and low temperatures that prevail over the antecedent late fall to early spring interval.

Based on simulations made here with the framework for a single hypothetical management scenario, METRO effluent concentrations will need to be reduced substantially more than 50% to avoid violations of the ammonia standard in the lake. Substantial overlap with prevailing in-lake T-NH_3 concentrations and margins of violation of the chronic toxicity standard were predicted for this management scenario. This overlap serves to demonstrate an important point for managers that the effects of natural variations in certain forcing conditions can mask those associated with substantial changes in anthropogenic material loading. Managers need to be aware of the potential for such overlaps in designing and interpreting the results of water quality monitoring programs.

A major rehabilitation program is under way to abate the effects of domestic waste on Onondaga Lake and eliminate violations of water quality standards, including the ammonia toxicity standard (Matthews et al. 2000). The total cost for the overall program is presently estimated to be ~$400 million (Effler et al. 2001) and will be phased over a 14-year period. Application of the full probabilistic capabilities of the framework developed here is recommended for the TMDL analysis, which will establish the level of treatment necessary at METRO that will eliminate the violations of the ammonia standard that prevail in Onondaga Lake.

ACKNOWLEDGMENTS

Field, laboratory, and data analysis support was provided by B. A. Wagner, C. M. (Brooks) Matthews, and D. A. Matthews. This is contribution No. 194 of the Upstate Freshwater Institute in Syracuse, N.Y.; it benefited from the comments of anonymous reviewers.

REFERENCES

Auer, M. T., and Effler, S. W. (1989). "Variability in photosynthesis: Impact on DO models." *J. Envir. Engrg.*, ASCE, 115(5), 944–963.

Bierman, V. J., and Dolan, D. M. (1986). "Modeling of phytoplankton in Saginaw Bay: II. Post-audit phase." *J. Envir. Engrg.*, ASCE, 112(2), 415–429.

Brezonik, P. L. (1972). "Nitrogen: Sources and transformations in natural waters." *Nutrients in Natural Waters*, H. E. Allen and T. R. Kramer, eds., Wiley, New York, 1–50.

Brooks, C. M., and Effler, S. W. (1990). "Distribution of nitrogen species in polluted Onondaga Lake. N.Y., USA." *Water Air Soil Pollution*, 52, 247–262.

Canale, R. P., DePalma, L. M., and Vogel, H. (1976). "Plankton-based food web model for Lake Michigan." *Modeling biochemical processes in aquatic ecosystems*, R. P. Canale, ed., Ann Arbor Science, Ann Arbor, Mich.

Canale, R. P., and Effler, S. W. (1989). "Stochastic phosphorus model for Onondaga Lake." *Water Res.*, 23, 1009–1016.

Canale, R. P., Gelda, R. K., and Effler, S. W. (1996). "Development and testing of nitrogen model for Onondaga Lake, N.Y." *Lake and Reservoir Mgmt.*, 12, 151–164.

Chapra, S. C. (1997). *Surface water-quality modeling*, McGraw-Hill, New York.

DiToro, D. M., and Connolly, J. P. (1980). "Mathematical models of water quality in large lakes. Part 2: Lake Erie." *EPA-600/3-80-065*. U.S. Environmental Protection Agency, Duluth, Minn.

Doerr, S. M., Canale, R. P., and Effler, S. W. (1996). "Development and testing of total phosphorus model for Onondaga Lake, N.Y." *Lake and Reservoir Mgmt.*, 12(1), 141–150.

Driscoll, C. T., Effler, S. W., and Doerr, S. M. (1994). "Changes in inorganic carbon chemistry and deposition of Onondaga Lake, New York." *Envir. Sci. and Technol.*, 28(7), 1211–1218.

Effler, S. W. (1996). *Limnological and engineering analysis of polluted urban lake. Prelude to environmental management of Onondaga Lake, New York*, Springer, New York.

Effler, S. W., and Doerr, S. M. (1996). "Water quality model evaluations for scenarios of loading reductions and diversion of domestic waste around Onondaga Lake." *Lake and Reservoir Mgmt.*, 12(1), 181–193.

Effler, S. W., and Harnett, G. (1996). "Background." *Limnological and engineering analysis of polluted urban lake; Prelude to environmental management of Onondaga Lake, New York*, S. W. Effler, ed., Springer, New York. 1–13.

Effler, S. W., and Hennigan, R. D. (1996). "Onondaga Lake, New York: Legacy of pollution." *Lake and Reservoir Mgmt.*, 12(1), 1–13.

Effler, S. W., and Owens, E. M. (1986). "Impact of lake acidification on stratification." *J. Envir. Engrg.*, ASCE, 111(6), 822–832.

Effler, S. W., and Owens, E. M. (1996). "Density stratification in Onondaga Lake: 1968–1994." *Lake and Reservoir Mgmt.*, 12(1), 25–33.

Effler, S. W., and Whitehead, K. A. (1996). "Tributaries and discharges." *Limnological and engineering analysis of polluted urban lake. Prelude to environmental management of Onondaga Lake, New York*. S. W. Effler, ed., Springer, New York, 97–199.

Effler, S. W., Brooks, C. M., and Whitehead, K. A. (1996a). "Domestic waste inputs of nitrogen and phosphorus to Onondaga Lake, and water quality implications." *Lake and Reservoir Mgmt.*, 12(1), 127–140.

Effler, S. W., Gelda, R. K., and Brooks, C. M. (2001). "Implications of industrial loads for ammonia pollution in an urban lake." *Water Envir. Res.*, 73(2), 192–203.

Effler, S. W., Brooks, C. M., Auer, M. T., and Doerr, S. M. (1990). "Free ammonia in polluted hypereutrophic urban lake." *J. Water Pollution Control Fed.*, 62(6), 771–779.

Effler, S. W., Owens, E. M., Schimel, K., and Dobi, J. (1986). "Weather-based variations in thermal stratification." *J. Hydr. Engrg.*, ASCE, 112(2), 159–165.

Effler, S. W., Perkins, M. G., Whitehead, K. A., and Romanowicz, E. A. (1996b). "Ionic inputs to Onondaga Lake: Origins, character, and changes." *Lake and Reservoir Mgmt.*, 12(1), 15–23.

Effler, S. W., Brooks, C. M., Address, J. M., Doerr, S. M., Storey, M. L., and Wagner, B. A. (1991). "Pollutant loadings from solvay waste beds to lower Ninemile Creek, NY." *Water Air Soil Pollution*, 55, 427–444.

Emerson, K., Russo, R. C., Lund, R. E., and Thurston, R. V. (1975). "Aqueous ammonia equilibrium calculations: Effect of pH and temperature." *J. Fisheries Res. Board of Canada*, 32(11), 2379–2383.

Gelda, R. K., Effler, S. W., and Brooks, C. M. (1999). "Nitrite and two stages of nitrification in nitrogen polluted Onondaga Lake, N.Y." *J. Envir. Qual.*, 28(5), 1505–1517.

Gelda, R. K., Brooks, C. M., Effler, S. W., and Auer, M. T. (2000). "Interannual variations in nitrification in hypereutrophic urban lake: Occurrences and implications." *Water Res.*, 34(4), 1107–1118.

Hall, G. H. (1986). "Nitrification in lakes." *Nitrification*, J.I. Prosser, ed., IRL Press, Washington, D.C., 127–156.

Harris, G. P. (1986). *Phytoplankton ecology, structure, function, and fluctuation*, Chapman and Hall, New York.

Heber, M., and Ballentine, K. (1992). "Memorandum to water quality standards coordinators: Ammonia toxicity criteria." U.S. Environmental Protection Agency, Washington, D.C.

Johnson, A. H. (1979). "Estimating solute transport in streams from grab samples." *Water Resour. Res.*, 15(5), 1224–1228.

Lam, D. C., Schertzer, W. M., and Fraser, A. S. (1987). "Oxygen depletion in Lake Erie: Modeling physical, chemical, and biological interactions, 1972 and 1979." *J. Great Lakes Res.*, 13(4), 770–781.

Manczak, H., and Florczyk, L. (1971). "Interpretation of results from studies of pollution of surface flowing waters." *Water Res.*, 5(3), 575–584.

Matthews, D. A., Brooks, C. M., and Effler, S. W. (2000). "Ammonia and toxicity criteria in polluted Onondaga Lake, New York." *Water Envir. Res.*, 72(6), 731–741.

Messer, J. J., Ho, J., and Grenney, W. J. (1984). "Ionic strength correction for extent of ammonia ionization in freshwater." *Canadian J. Fisheries and Aquatic Res.*, 41(3), 811–815.

Nikolaidis, N. P., Rajaram, H., Schneor, J. L., and Georgakakos, K. P. (1988). "Generalized soft water acidification model." *Water Resour. Res.*, 24(7), 1983–1996.

Owens, E. M., and Effler, S. W. (1989). "Changes in stratification in Onondaga Lake, N.Y." *Water Resour. Bull.*, 25(3), 587–597.

Owens, E. M., et al. (1998). "A strategy for reservoir model forecasting based on historic meteorological conditions." *Lake and Reservoir Mgmt.*, 14(2/3), 322–331.

Rowell, C. (1996). "Paleolimnology of Onondaga Lake: History of anthropogenic impacts on lake water quality." *Lake and Reservoir Mgmt.*, 12(1), 35–45.

Stauffer, R. E. (1985). "Relationships between phosphorus loading and trophic state in calcareous lakes of southeast Wisconsin." *Limnology and Oceanography*, 30(1), 123–145.

Stefan, H. G., Hondzo, M., and Fang, X. (1993). "Lake and quality modeling for projected future eliminate scenarios." *J. Envir. Quality*, 22(2), 417–431.

Tango, P. J., and Ringler, N. H. (1996). "Role of pollution and external

refugia in structuring the Onondaga Lake fish community." *Lake and Reservoir Mgmt.*, 12(1), 81–90.
Thomann, R. V., and Mueller, J. A. (1987). *Principles of surface water quality modeling and control*, Harper & Row, New York.
U.S. Environmental Protection Agency (EPA). (1985). "Ambient water quality criteria for ammonia—1984." Office of Water Regulations and Standards Criteria and Standards Division, Washington, D.C.
U.S. Environmental Protection Agency (EPA). (1991a). "Guidance for water quality-based decisions: TMDL process." *Rep. No. EPA-440-4-91-001*, Ofc. of Water, Washington, D.C.
U.S. Environmental Protection Agency (EPA) (1991b). "Technical support document for water quality-based toxics control." *Rep. No. EPA-505-2-90-001*, Ofc. of Water, Washington, D.C.
U.S. Environmental Protection Agency (EPA). (1996). "Ammonia criteria." *Water Quality Criteria and Standards Newsletter, Rep. No. EPA-823-N-96-001*, Ofcs. of Water, Washington, D.C., January.
U.S. Environmental Protection Agency (EPA). (1998). "Update of ambient water quality criteria for ammonia." *Rep. No. EPA822-R-98-008*, Ofc. of Water Regulations and Standards Criteria and Standards Div., Washington, D.C.
U.S. Environmental Protection Agency (EPA). (1999). "Update of ambient water quality criteria for ammonia." Ofc. of Water Regulations and Standards Criteria and Standards Div., Washington, D.C. (in press).
Vollenweider, R. A. (1974). "Manual on methods for measuring primary production in aquatic environments." *IBP Handbook No. 12*, 2nd ed., Blackwell Scientific, Oxford, U.K.
Wetzel, R. G. (1983). *Limnology*, 2nd ed., Saunders College, New York.
Wickman, T. R. (1996). "Modeling and measurement of nitrogen diagenesis and ammonia release from sediments of hypereutrophic lake." *MS thesis*. Dept. of Civ. and Envir. Engrg., Michigan Technological University, Houghton, Mich.

NOTATION

The following symbols are used in this paper:

k_N = nitrification rate constant (d^{-1});
T = temperature (°C); and
v_t = vertical mixing coefficient ($m \cdot d^{-1}$).