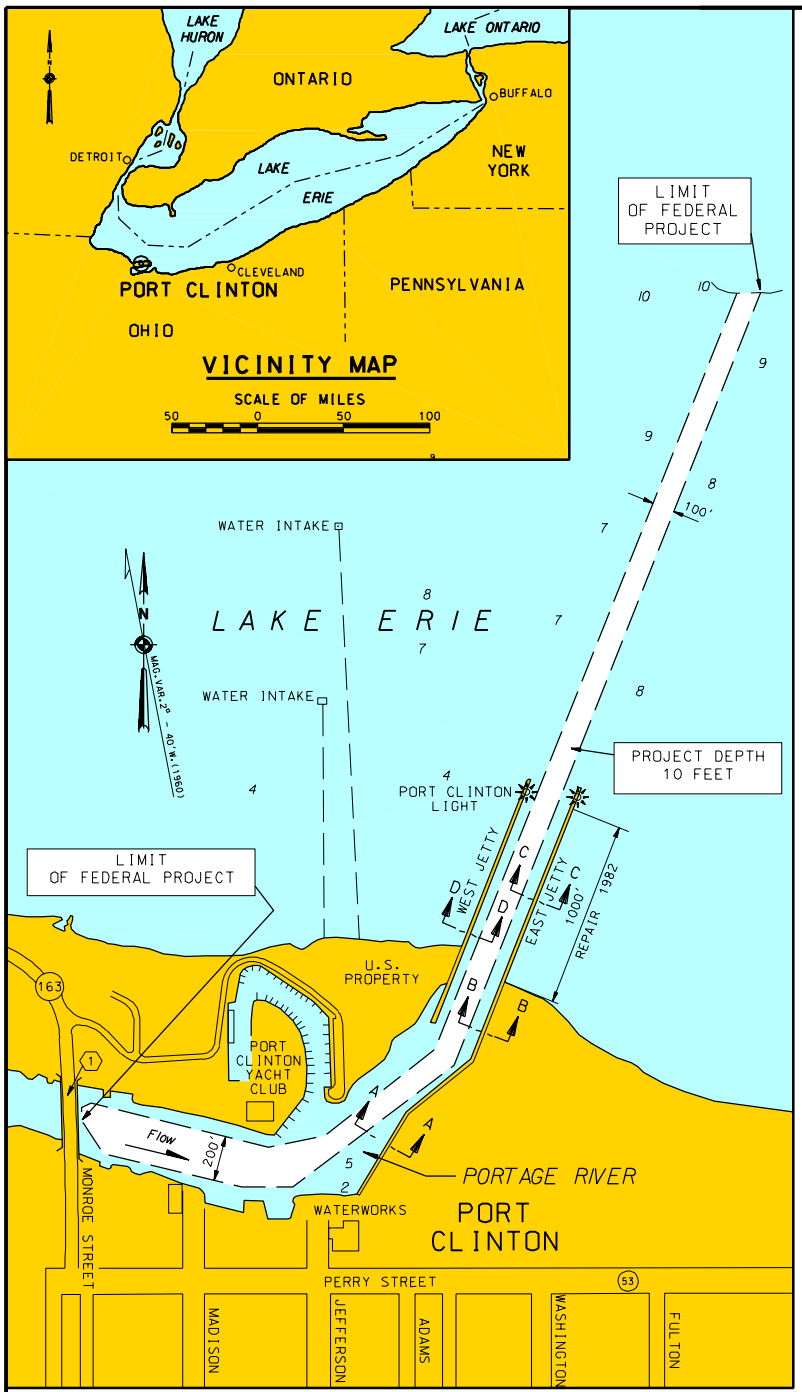


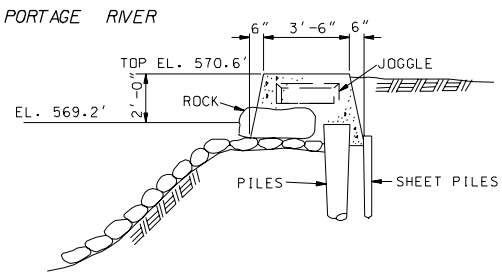


SECTION A-A

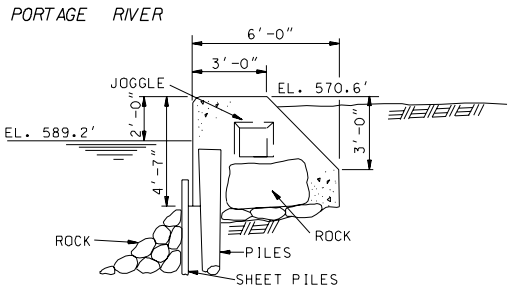


SECTION B-B

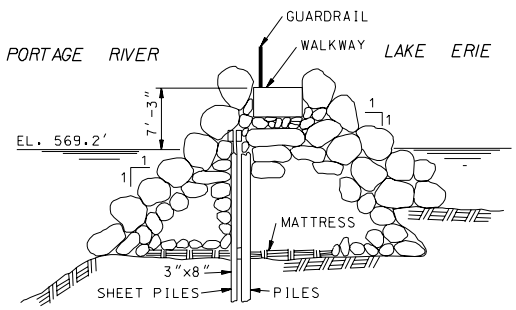


SECTION C-C

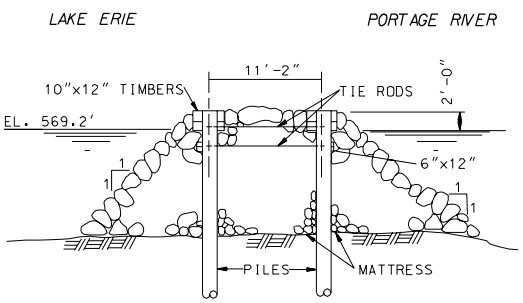


SECTION D-D

INDEX TO BRIDGES
SHOWN THUS (1)

(1) MONROE STREET BRIDGE

NOTE

(2) INDICATES STATE ROUTE

PROJECT DEPTHS, SOUNDINGS AND ELEVATIONS ARE REFERRED TO INTERNATIONAL GREAT LAKES DATUM (1985) FOR LAKE ERIE, ELEVATION 569.2 FEET ABOVE MEAN WATER LEVEL (M.W.L.) AT RIMOUSKI, QUEBEC

# PORT CLINTON HARBOR
## OHIO

SCALE OF FEET
500 0 500 1000

U.S. ARMY ENGINEER DISTRICT BUFFALO
SEPTEMBER 1994