Public Notice

U.S. Army Corps of Engineers
Buffalo District
CELRB-TD-R

Applicant: Rocky River Preservation Partners, LLC

Published: June 4, 2020
Expires: July 6, 2020

Application No: LRB 2020-00416
Section: Ohio

All written comments should reference the above Application No. and be addressed to:
Attn: **Brian Swartz**
U.S. Army Corps of Engineers, Buffalo District
Regulatory Branch
240 Lake Street, Unit D
Oak Harbor, Ohio 43449

THE PURPOSE OF THIS PUBLIC NOTICE IS TO SOLICIT COMMENTS FROM THE PUBLIC REGARDING THE WORK DESCRIBED BELOW. NO DECISION HAS BEEN MADE AS TO WHETHER OR NOT A PERMIT WILL BE ISSUED AT THIS TIME.

Application for Permit under Authority of
Section 10 of the Rivers and Harbors Act of 1899 and
Section 404 of the Clean Water Act (33 U.S.C. 1344)

APPLICANT: Rocky River Preservation Partners, LLC

WATERWAY & LOCATION: Lake Erie at 22732 Lake Road, Rocky River, Cuyahoga County, Ohio (Sheets 1 of 8).

LATITUDE & LONGITUDE: **Latitude North**: 41.48283
Longitude West: -81.87153

EXISTING CONDITIONS:
The project is located north of Lake Road on an approximate 1.95 acre parcel along the southern shoreline of Lake Erie. The area consists of three armor stone detached structures in Lake Erie and a wooden deck on the west side of the property and a rock wall along the remainder of the shoreline (Sheet 2 to 8 of 8).

Description of delineation of waters of the US, if applicable:
Approximately 0.03 acres of open water within Lake Erie. This is the only delineated waters of the U.S. located on site.

PROPOSED WORK:
Construct a new approximate 170.75 foot long armor stone revetment. The project will require the excavation of approximately 199.3 cubic yards (CY) of existing armor stone from below the ordinary high water (OHW) of Lake Erie of (573.4 International Great Lakes Datum (IGLD), 1985) and the removal of an existing wooden deck that is approximately 20 feet long at the existing shoreline line, extends approximately 16.5 feet lakeward and is 10 feet wide at the northern end. The new revetment will require the placement of 211.7 CY of armor stone below the OHW and will extended approximately 6.25 feet lakeward of the existing shoreline.

PROJECT PURPOSE:
Basic: Bank Stabilization
Overall: To prevent erosion of the existing Lake Erie shoreline at 22732 Lake Road, Rocky River, Cuyahoga County, Ohio

AVOIDANCE AND MINIMIZATION INFORMATION:
The applicant has indicated the proposed structure is the minimum length and width required to protect the existing shoreline. The sand and gravel located below the proposed project will be excavated down to clay or bedrock, and side cast into the near shore area either immediately downdrift of the project area and the applicant also proposes to complete a sand pre-fill of 341.5 CY down drift of the proposed crib pier.

PROPOSED MITIGATION:
No mitigation is proposed.

Location and details of the above described work are shown on the attached maps and drawings.

Comments or questions pertaining to the work described in this notice should be reference the Application Number and be directed to the attention of Brian Swartz, who can be contacted at the above address, by calling (419) 898-3491, or by e-mail at: brian.p.swartz@usace.army.mil. A lack of response will be interpreted as meaning that there is no objection to the work as proposed.
The applicant has certified that the proposed activity complies with Ohio's approved Coastal Zone Management Program and will be conducted in a manner consistent with that program.

The applicant has certified that the proposed activity complies with Ohio's approved Coastal Zone Management Program and will be conducted in a manner consistent with that program.

Any comments on the consistency of the proposed activity with Ohio's Coastal Zone Management Program should be forwarded to:

Mr. Mike Pettegrew
Ohio Department of Natural Resources
Office of Real Estate
2045 Morse Road
Columbus, OH 43229-6605
Phone: 614-265-6621
E-mail: mike.pettegrew@dnr.state.oh.us

The following authorization is required for this project:

Water Quality Certification (or waiver thereof) from the Ohio Environmental Protection Agency

Based on preliminary findings, there does not appear to be properties listed in, or eligible for listing in, the National Register of Historic Places within the permit area as shown on Sheet 3 of 8. This notice constitutes initiation of consultation with the Ohio Historic Preservation Office (SHPO) per Section 106 of the National Historic Preservation Act. All currently available historic resource information pertaining to this proposed project if any has been provided to the SHPO. Additional information concerning historic properties should be submitted to the Corps before the end of the comment period of this notice. The Corps will forward that information to the SHPO for their review.

Pursuant to Section 7 of the Endangered Species Act (16 U.S.C. 1531), the Corps of Engineers is consulting, under separate cover, with the USFWS to evaluate any potential impacts to: the Indiana bat (*Myotis sodalis*) – endangered; piping plover (*Charadrius melodus*) – endangered; northern long-eared bat (*Myotis septentrionalis*) – threatened; and rufa red knot (*Calidris canutus rufa*) – threatened, to ensure that the proposed activity is not likely to jeopardize their continued existence or result in the destruction or adverse modification of critical habitat.

This notice is promulgated in accordance with Title 33, Code of Federal Regulations, parts 320-330. Any interested party desiring to comment on the work described herein may do so by submitting their comments, in writing, so that they are received no later than 4:30 pm on the expiration date of this notice.

Comments submitted in response to this notice will be fully considered during the public interest review for this permit application. All written comments will be made a part of the administrative record which is available to the public under the Freedom of Information Act. The Administrative Record, or portions thereof may also be posted on a Corps of Engineers internet web site. Due to resource limitations, this office will normally not acknowledge the receipt of comments or respond to individual letters of comment.

Any individual may request a public hearing by submitting their written request, stating the specific reasons for holding a hearing, in the same manner and time period as other comments.

Public hearings for the purposes of the Corps permit program will be held when the District Commander determines he can obtain additional information, not available in written comments, that will aid him in the decision making process for this application. A Corps hearing is not a source of information for the general public, nor a forum for the resolution of issues or conflicting points of view (witnesses are not sworn and cross examination is prohibited). Hearings will not be held to obtain information on issues unrelated to the work requiring a permit, such as property ownership, neighbor disputes, or the behavior or actions of the public or applicant on upland property not regulated by the Department of the Army. Information obtained from a public hearing is given no greater weight than that obtained from written comments. Therefore, you should not fail to make timely written comments because a hearing might be held.

The decision to approve or deny this permit request will be based on an evaluation of the probable impact, including cumulative impacts of the proposed activity on the public interest. That decision will reflect the national concern for both protection and utilization of important resources. The benefits which reasonably may be expected to accrue from the proposal must be balanced against its reasonably foreseeable detriments. All factors which may be relevant to the proposal will be considered including the cumulative effects thereof; among these are conservation, economics, aesthetics, general environmental concerns, wetlands, historic properties, fish and wildlife values, flood hazards, flood plain

values, land use, navigation, shoreline erosion and accretion, recreation, water supply and conservation, water quality, energy needs, safety, food and fiber production, mineral needs, considerations of property ownership, and in general, the needs and welfare of the people.

The Corps of Engineers is soliciting comments from the public; Federal, state and local agencies and officials; Indian Tribes; and other interested parties in order to consider and evaluate the impacts of this proposed activity. Any comments received will be considered by the Corps of Engineers to determine whether to issue, modify, condition or deny a permit for this proposal. To make this decision, comments are used to assess impacts on endangered species, historic properties, water quality, general environmental effects, and the other public interest factors listed above. Comments are used in the preparation of an Environmental Assessment and/or an Environmental Impact Statement pursuant to the National Environmental Policy Act. Comments are also used to determine the need for a public hearing and to determine the overall public interest of the proposed activity.

SIGNED

Diane C. Kozlowski
Chief, Regulatory Branch

NOTICE TO POSTMASTER: It is requested that this notice be posted continuously and conspicuously for 30 days from the date of issuance.

Rocky River Preservation Partners, LLC
D/A Processing No. LRB 2020-00416
Cuyahoga, County, Ohio Quad: Lakewood
Sheet 1 of 8

SHEET LIST

EN-1 COVER SHEET
EN-2 EXISTING SURVEY
EN-3 EXISTING SECTIONS
EN-4 PROPOSED PLAN
EN-5 PROPOSED SECTION A-A'
EN-6 PROPOSED SECTION B-B'
EN-7 PROPOSED SECTION C-C'
EN-8 PROPOSED SECTION D-D'

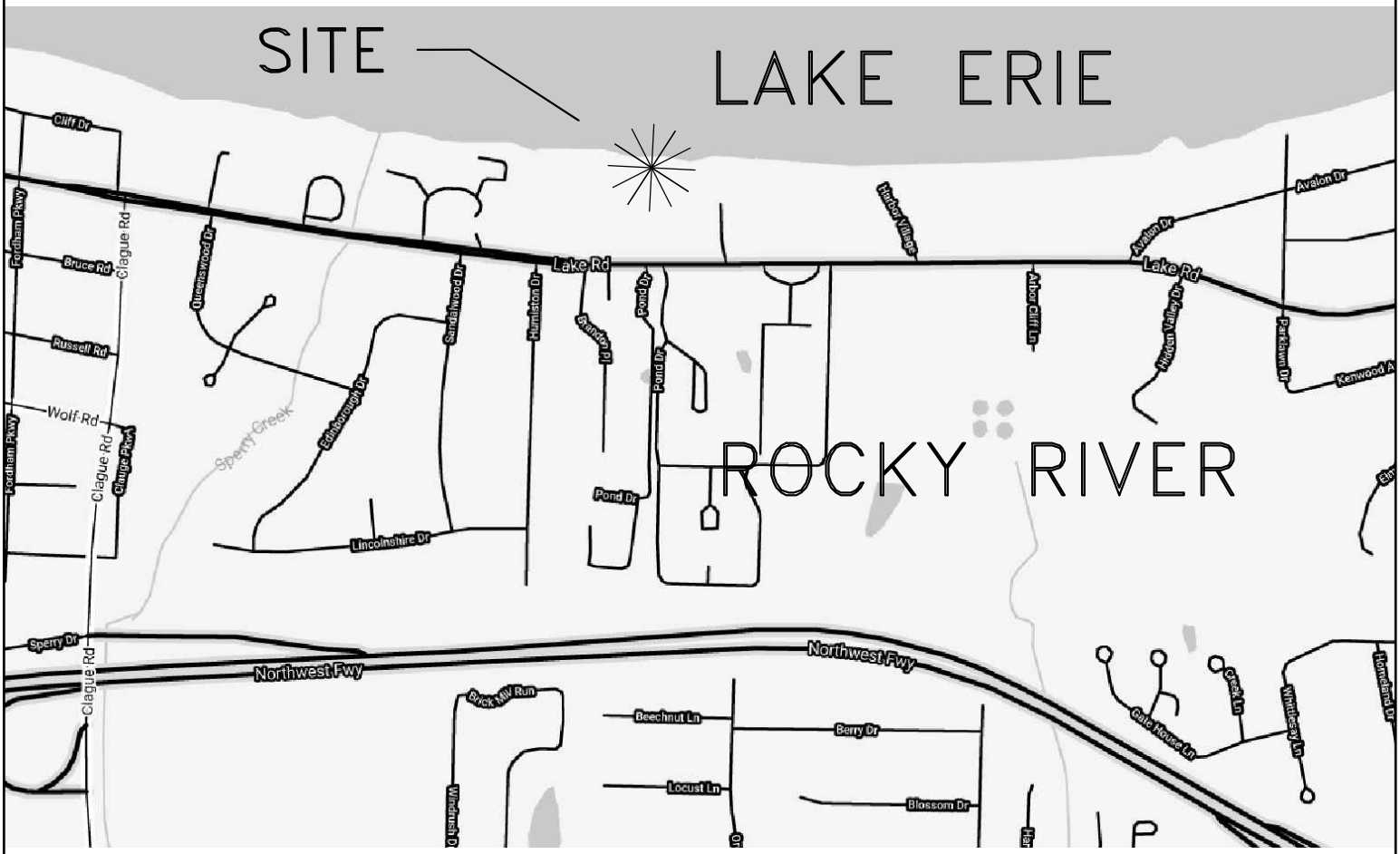

DWG. NO.:	DWG. TITLE:	PROJECT:			REVISIONS:	
EN-1	COVER SHEET	ROCKY RIVER PRESERVATION PARTNERS LLC	SCALE:	NTS	2-12-20	4-16-20
ISSUE:	LOCATION MAP	22732 LAKE RD.	DATE:	5-12-20	2-17-20	4-24-20
APPL-1		LOCATION	DRAWN BY:	R.A.S.	3-10-20	5-05-20
		ROCKY RIVER, OHIO 44116	CHECKED BY:	J.A.S.	3-11-20	5-11-20
					3-16-20	

ENGINEERED TECHNICAL SOLUTIONS
Site Design
Erosion Control
Ecological · Utility
27330 Center Ridge Road
Westlake, Ohio 44145
Phone: (440) 899-6880
www.engineeredtechnicalsolutions.com

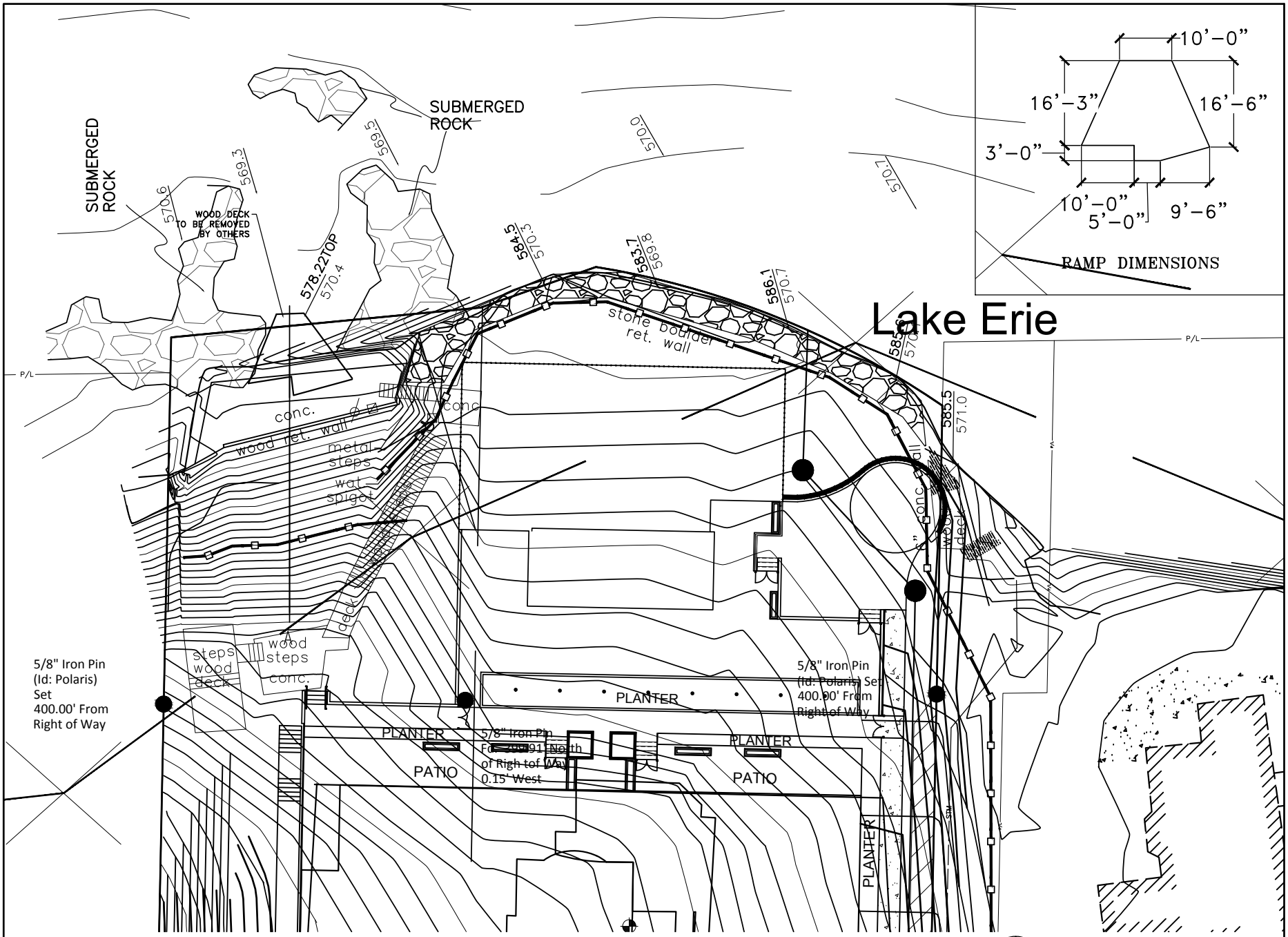

Rocky River Preservation Partners, LLC
D/A Processing No. LRB 2020-00416
Cuyahoga, County, Ohio Quad: Lakewood
Sheet 2 of 8

ENGINEERED TECHNICAL SOLUTIONS
Site Design
Erosion Control
Ecological · Utility
27330 Center Ridge Road
Westlake, Ohio 44145
Phone: (440) 899-6880
www.engineeredtechnicalsolutions.com

REVISIONS:
2-12-20 4-16-20
2-17-20 4-24-20
3-10-20 5-05-20
3-11-20 5-11-20
3-16-20

PROJECT: ROCKY RIVER PRESERVATION PARTNERS LLC
22732 LAKE RD.
LOCATION ROCKY RIVER, OHIO 44116
SCALE: 1"=30'
DATE: 5-12-20
DRAWN BY: R.A.S.
CHECKED BY: T.S.

DWG. TITLE: EXISTING SURVEY

DWG. NO.: EN-2
ISSUE: APPL-1

Rocky River Preservation Partners, LLC
D/A Processing No. LRB 2020-00416
Cuyahoga, County, Ohio Quad: Lakewood
Sheet 3 of 8

GENERAL NOTES:
1. ALL ELEVATIONS REFERENCE IGLD 1985

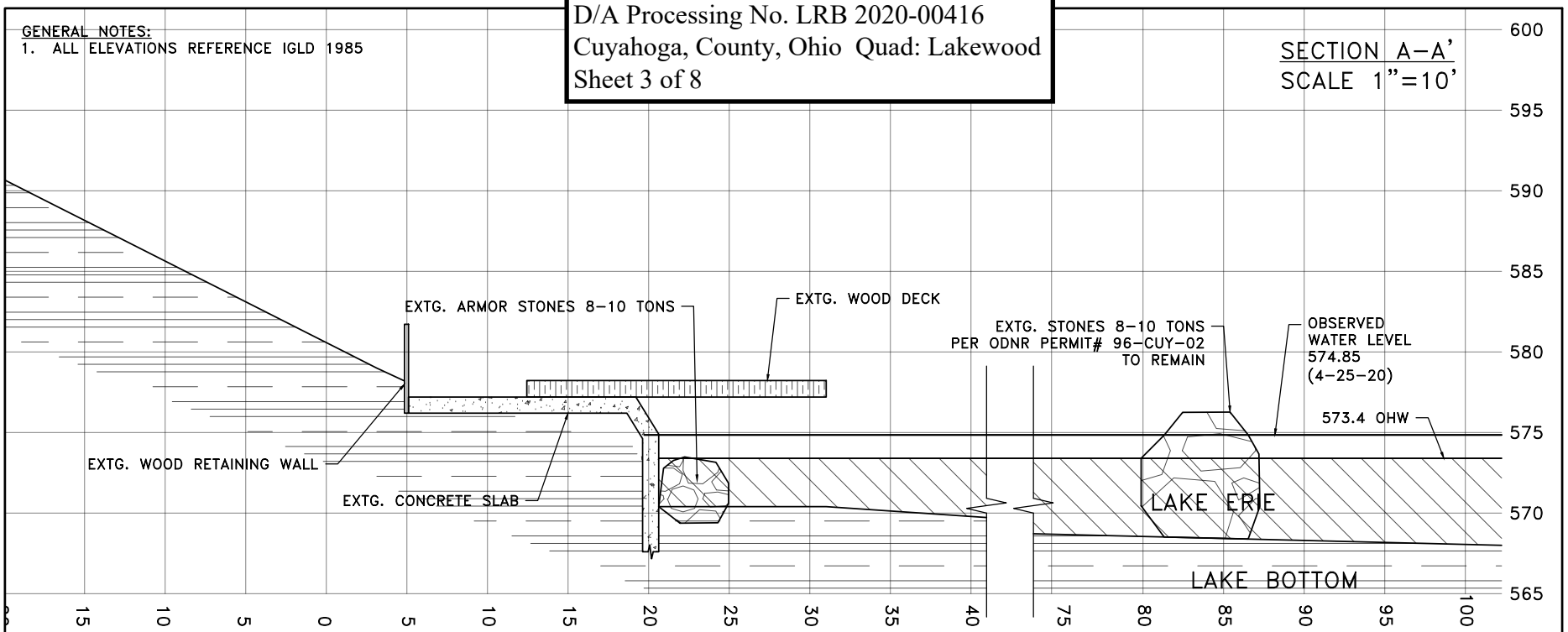

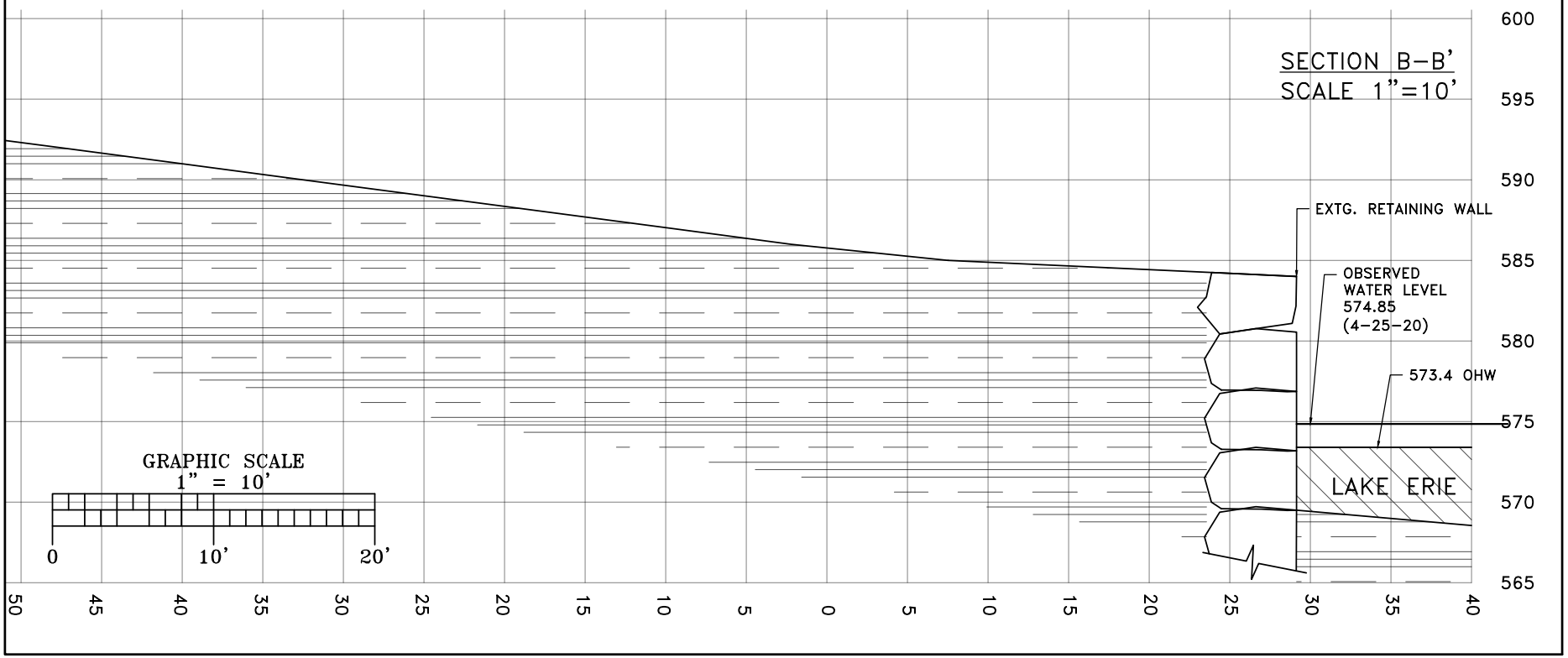

ENGINEERED TECHNICAL SOLUTIONS
Site Design
Erosion Control
Ecological · Utility
27330 Center Ridge Road
Westlake, Ohio 44145
Phone: (440) 899–6880
www.engineeredtechnicalsolutions.com

REVISIONS:
2–12–20 4–16–20
2–17–20 4–24–20
3–10–20 5–05–20
3–11–20 5–11–20
3–16–20

PROJECT: ROCKY RIVER PRESERVATION PARTNERS LLC
22732 LAKE RD.
SCALE: 1"=10'
DATE: 5–12–20
DRAWN BY: R.A.S.
CHECKED BY: T.S.
LOCATION ROCKY RIVER, OHIO 44116

DWG. TITLE: EXTG. SECTIONS

DWG. NO.: EN–3
ISSUE: APPL–1

GENERAL NOTES:
1. ALL ELEVATIONS REFERENCE IGLD 1985
2. PER USACE REQUIREMENTS 341.5 CUBIC YARDS OF SAND PRE-FILL FROM AN UPLAND SOURCE SHALL BE SIDECAST INTO THE LITORAL DRIFT IN LESS THAN THREE FEET OF WATER, EITHER IMMEDIATELY EAST OR LAKEWARD OF THE PROJECT.
3. ALL SAND AND GRAVEL LOCATED BELOW THE PROPOSED FILL MATERIAL SHALL BE EXCAVATED AND SIDECAST INTO THE LITORAL DRIFT IN LESS THAN THREE FEET OF WATER EITHER IMMEDIATELY EAST OR LAKEWARD OF THE PROJECT.

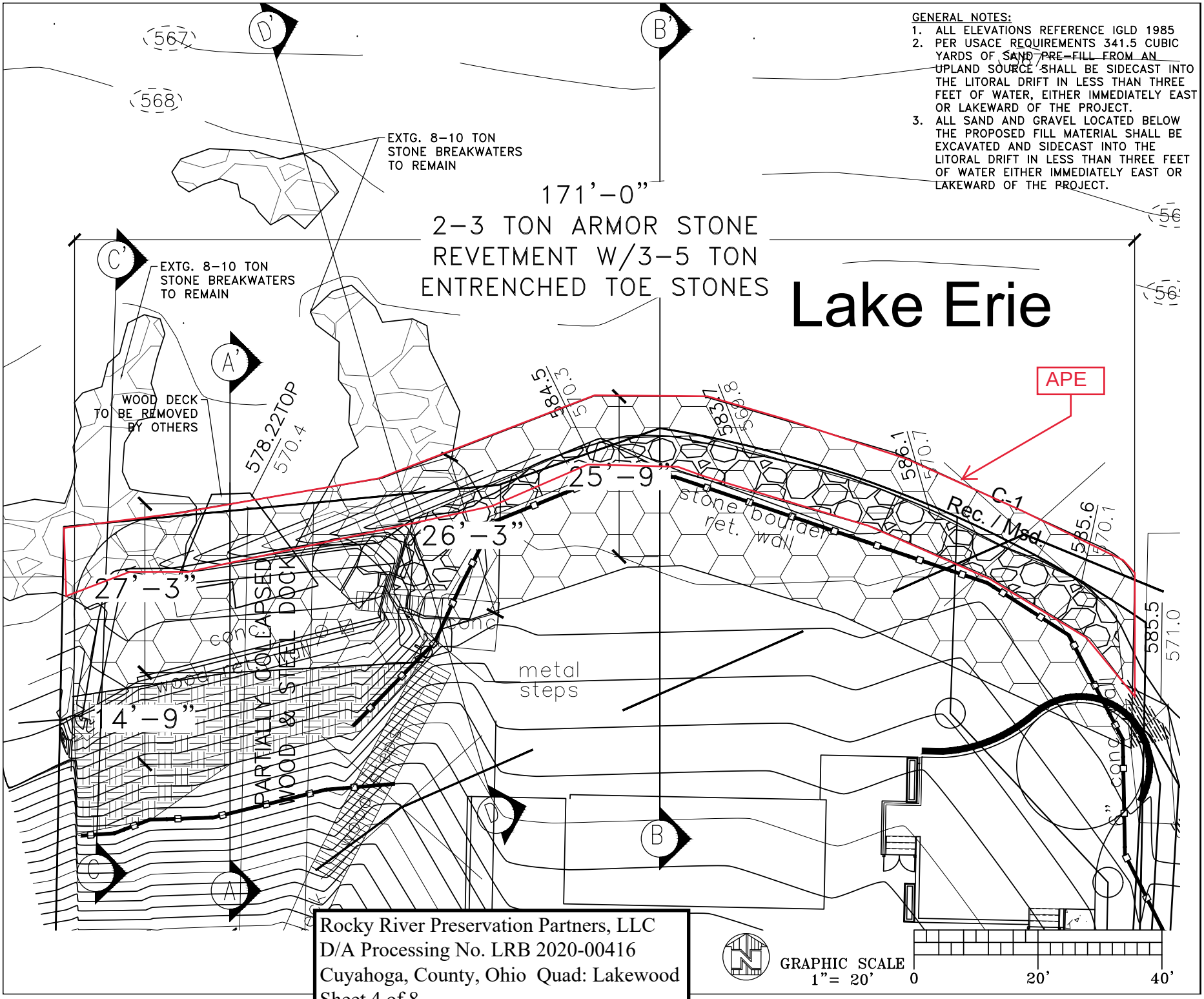

Rocky River Preservation Partners, LLC
D/A Processing No. LRB 2020-00416
Cuyahoga, County, Ohio Quad: Lakewood
Sheet 4 of 8

ENGINEERED TECHNICAL SOLUTIONS
Site Design
Erosion Control
Ecological · Utility
27330 Center Ridge Road
Westlake, Ohio 44145
Phone: (440) 899-6880
www.engineeredtechnicalsolutions.com

REVISIONS:
2-12-20 4-16-20
2-17-20 4-24-20
3-10-20 5-05-20
3-11-20 5-11-20
3-16-20

PROJECT: ROCKY RIVER PRESERVATION PARTNERS LLC
22732 LAKE RD.
LOCATION ROCKY RIVER, OHIO 44116
SCALE: 1"=20'
DATE: 5-12-20
DRAWN BY: R.A.S.
CHECKED BY: J.A.S.

DWG. TITLE: PROPOSED PLAN

DWG. NO.: EN-4
ISSUE: APPL-1

Cross Section A-A

GENERAL NOTES:
1. ALL ELEVATIONS REFERENCE IGLD 1985
2. PER USACE REQUIREMENTS 341.5 CUBIC YARDS OF SAND PRE-FILL FROM AN UPLAND SOURCE SHALL BE SIDECAST INTO THE LITORAL DRIFT IN LESS THAN THREE FEET OF WATER, EITHER IMMEDIATELY EAST OR LAKEWARD OF THE PROJECT.
3. ALL SAND AND GRAVEL LOCATED BELOW THE PROPOSED FILL MATERIAL SHALL BE EXCAVATED AND SIDECAST INTO THE LITORAL DRIFT IN LESS THAN THREE FEET OF WATER EITHER IMMEDIATELY EAST OR LAKEWARD OF THE PROJECT.

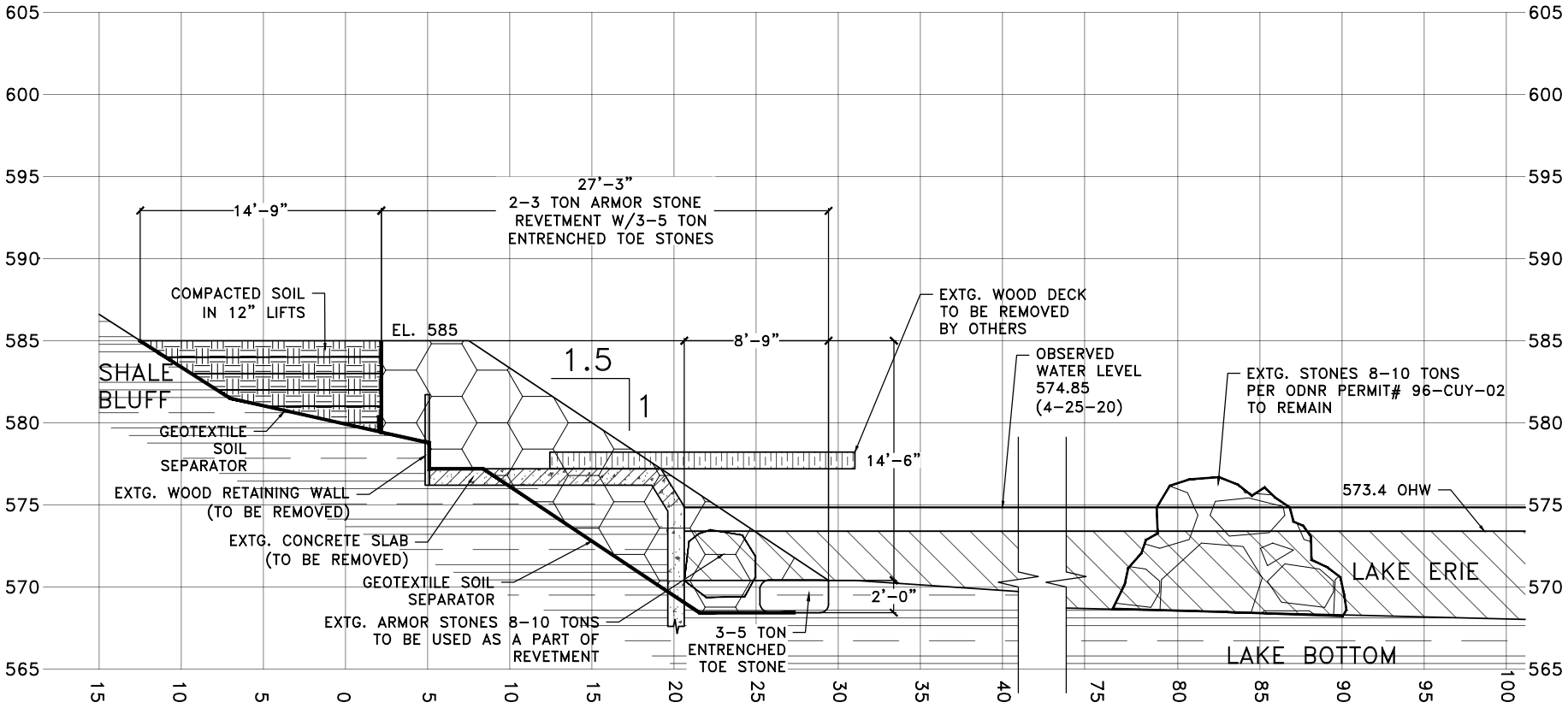

Rocky River Preservation Partners, LLC
D/A Processing No. LRB 2020-00416
Cuyahoga, County, Ohio Quad: Lakewood
Sheet 5 of 8

GRAPHIC SCALE
1" = 10'

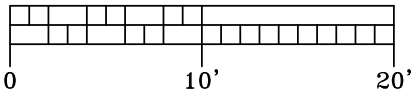

ENGINEERED TECHNICAL SOLUTIONS
Site Design
Erosion Control
Ecological · Utility
27330 Center Ridge Road
Westlake, Ohio 44145
Phone: (440) 899-6880
www.engineeredtechnicalsolutions.com

REVISIONS:
2-12-20 4-16-20
2-17-20 4-24-20
3-10-20 5-05-20
3-11-20 5-11-20
3-16-20

SCALE: 1"=10'
DATE: 5-12-20
DRAWN BY: R.A.S.
CHECKED BY: J.A.S.

PROJECT: ROCKY RIVER PRESERVATION PARTNERS LLC
22732 LAKE RD.
LOCATION ROCKY RIVER, OHIO 44116

DWG. TITLE: PROP. SECTION A-A'

DWG. NO.: EN-5
ISSUE: APPL-1

Cross Section B-B

GENERAL NOTES:
1. ALL ELEVATIONS REFERENCE IGLD 1985
2. PER USACE REQUIREMENTS 341.5 CUBIC YARDS OF SAND PRE-FILL FROM AN UPLAND SOURCE SHALL BE SIDECAST INTO THE LITORAL DRIFT IN LESS THAN THREE FEET OF WATER, EITHER IMMEDIATELY EAST OR LAKEWARD OF THE PROJECT.
3. ALL SAND AND GRAVEL LOCATED BELOW THE PROPOSED FILL MATERIAL SHALL BE EXCAVATED AND SIDECAST INTO THE LITORAL DRIFT IN LESS THAN THREE FEET OF WATER EITHER IMMEDIATELY EAST OR LAKEWARD OF THE PROJECT.

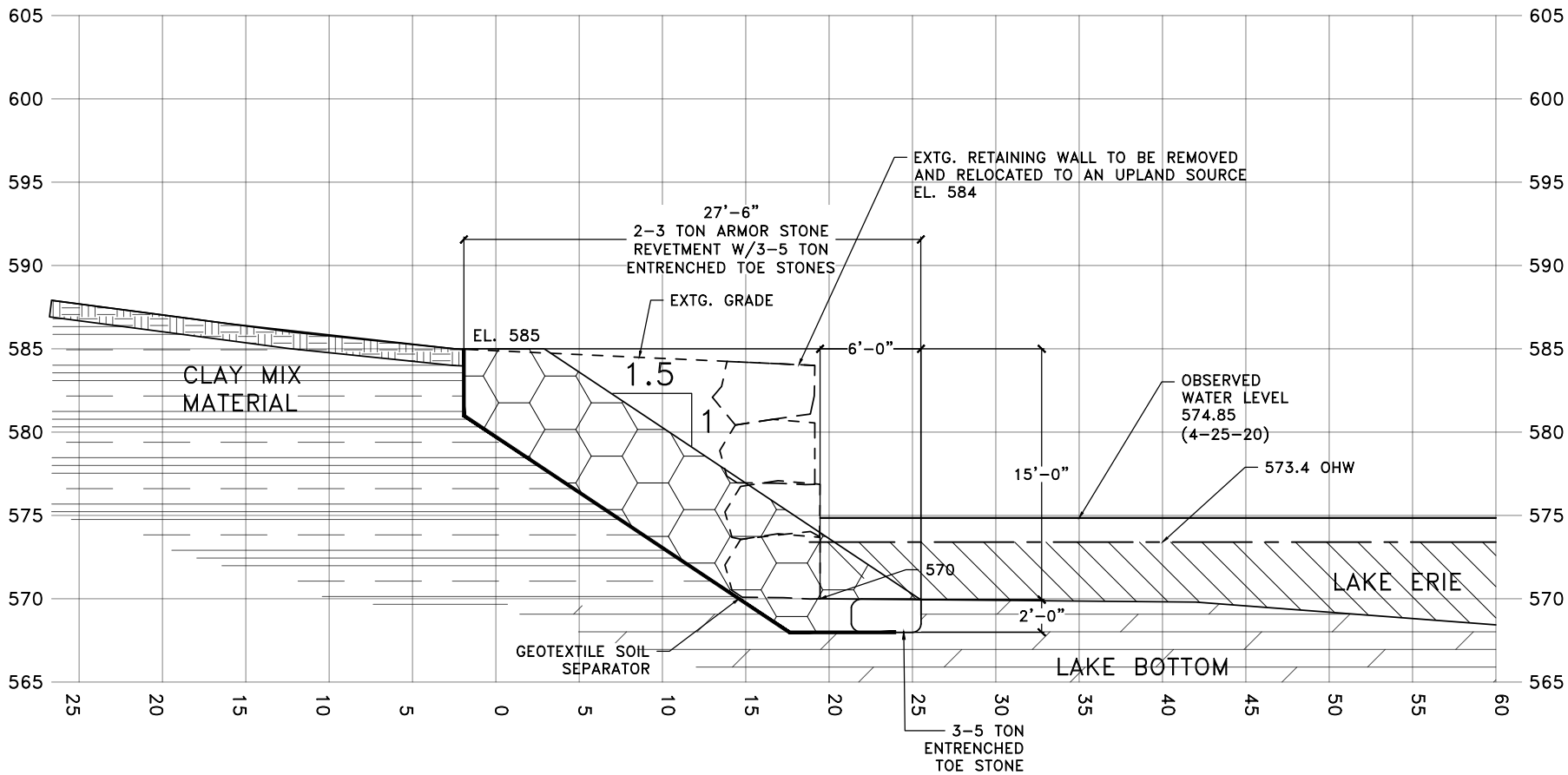

Rocky River Preservation Partners, LLC
D/A Processing No. LRB 2020-00416
Cuyahoga, County, Ohio Quad: Lakewood
Sheet 6 of 8

GRAPHIC SCALE
1" = 10'
0 10' 20'

ENGINEERED TECHNICAL SOLUTIONS
Site Design
Erosion Control
Ecological · Utility
27330 Center Ridge Road
Westlake, Ohio 44145
Phone: (440) 899-6880
www.engineeredtechnicalsolutions.com

REVISIONS:
2-12-20 4-16-20
2-17-20 4-24-20
3-10-20 5-05-20
3-11-20 5-11-20
3-16-20

PROJECT: ROCKY RIVER PRESERVATION PARTNERS LLC
22732 LAKE RD.
LOCATION ROCKY RIVER, OHIO 44116
SCALE: 1"=10'
DATE: 5-12-20
DRAWN BY: R.A.S.
CHECKED BY: C.H.

DWG. TITLE: PROP. SECTION B-B'

DWG. NO.: EN-6
ISSUE: APPL-1

Cross Section C-C

GENERAL NOTES:
1. ALL ELEVATIONS REFERENCE IGLD 1985
2. PER USACE REQUIREMENTS 341.5 CUBIC YARDS OF SAND PRE-FILL FROM AN UPLAND SOURCE SHALL BE SIDECAST INTO THE LITORAL DRIFT IN LESS THAN THREE FEET OF WATER, EITHER IMMEDIATELY EAST OR LAKEWARD OF THE PROJECT.
3. ALL SAND AND GRAVEL LOCATED BELOW THE PROPOSED FILL MATERIAL SHALL BE EXCAVATED AND SIDECAST INTO THE LITORAL DRIFT IN LESS THAN THREE FEET OF WATER EITHER IMMEDIATELY EAST OR LAKEWARD OF THE PROJECT.

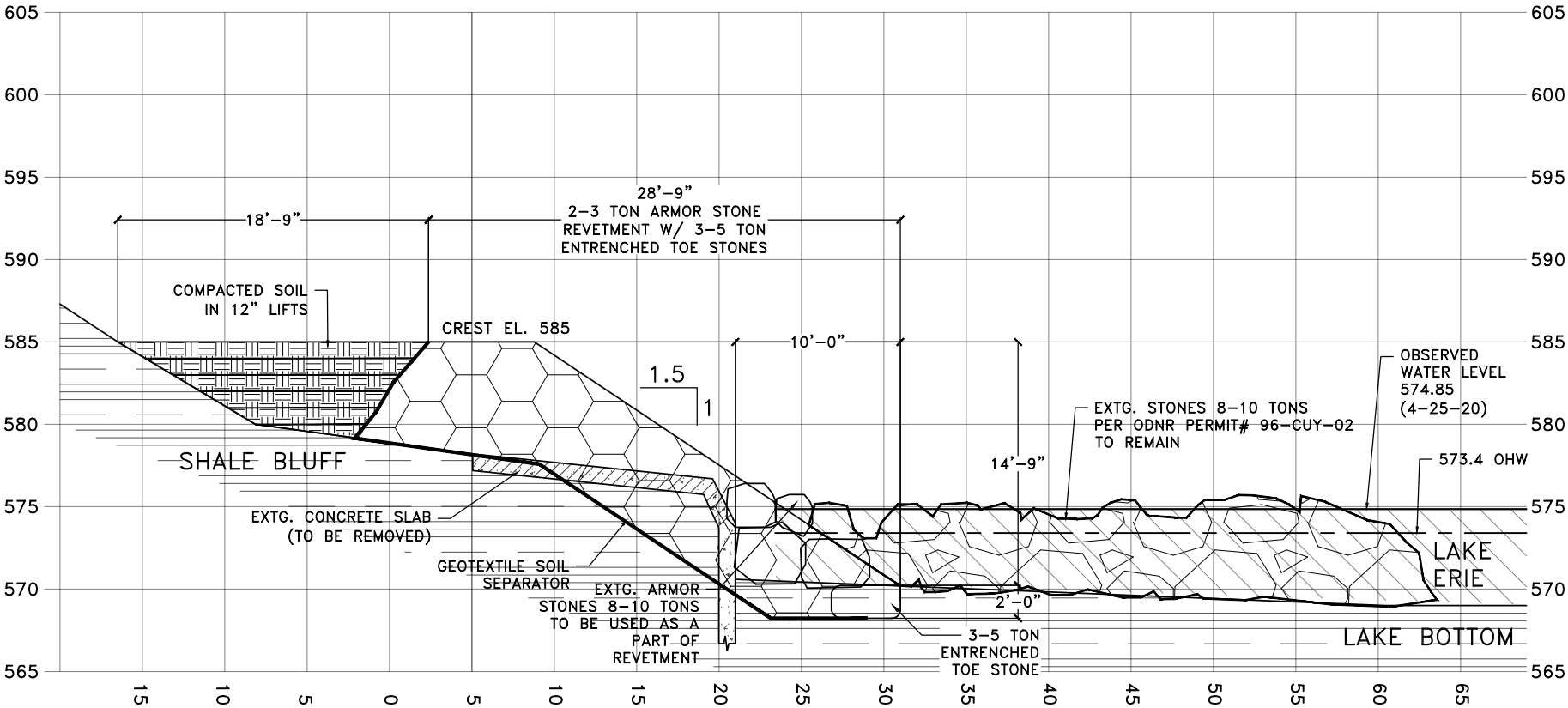

Rocky River Preservation Partners, LLC
D/A Processing No. LRB 2020-00416
Cuyahoga, County, Ohio Quad: Lakewood
Sheet 7 of 8

GRAPHIC SCALE
1" = 10'
0 10' 20'

ENGINEERED TECHNICAL SOLUTIONS
Site Design
Erosion Control
Ecological · Utility
27330 Center Ridge Road
Westlake, Ohio 44145
Phone: (440) 899-6880
www.engineeredtechnicalsolutions.com

REVISIONS:
2-12-20 4-16-20
2-17-20 4-24-20
3-10-20 5-05-20
3-11-20 5-11-20
3-16-20

PROJECT: ROCKY RIVER PRESERVATION PARTNERS LLC
22732 LAKE RD.
LOCATION ROCKY RIVER, OHIO 44116
SCALE: 1"=10'
DATE: 5-12-20
DRAWN BY: R.A.S.
CHECKED BY: C.H.

DWG. TITLE: PROP. SECTION C-C'

DWG. NO.: EN-7
ISSUE: APPL-1

Cross Section D-D

GENERAL NOTES:
1. ALL ELEVATIONS REFERENCE IGLD 1985
2. PER USACE REQUIREMENTS 341.5 CUBIC YARDS OF SAND PRE-FILL FROM AN UPLAND SOURCE SHALL BE SIDECAST INTO THE LITORAL DRIFT IN LESS THAN THREE FEET OF WATER, EITHER IMMEDIATELY EAST OR LAKEWARD OF THE PROJECT.
3. ALL SAND AND GRAVEL LOCATED BELOW THE PROPOSED FILL MATERIAL SHALL BE EXCAVATED AND SIDECAST INTO THE LITORAL DRIFT IN LESS THAN THREE FEET OF WATER EITHER IMMEDIATELY EAST OR LAKEWARD OF THE PROJECT.

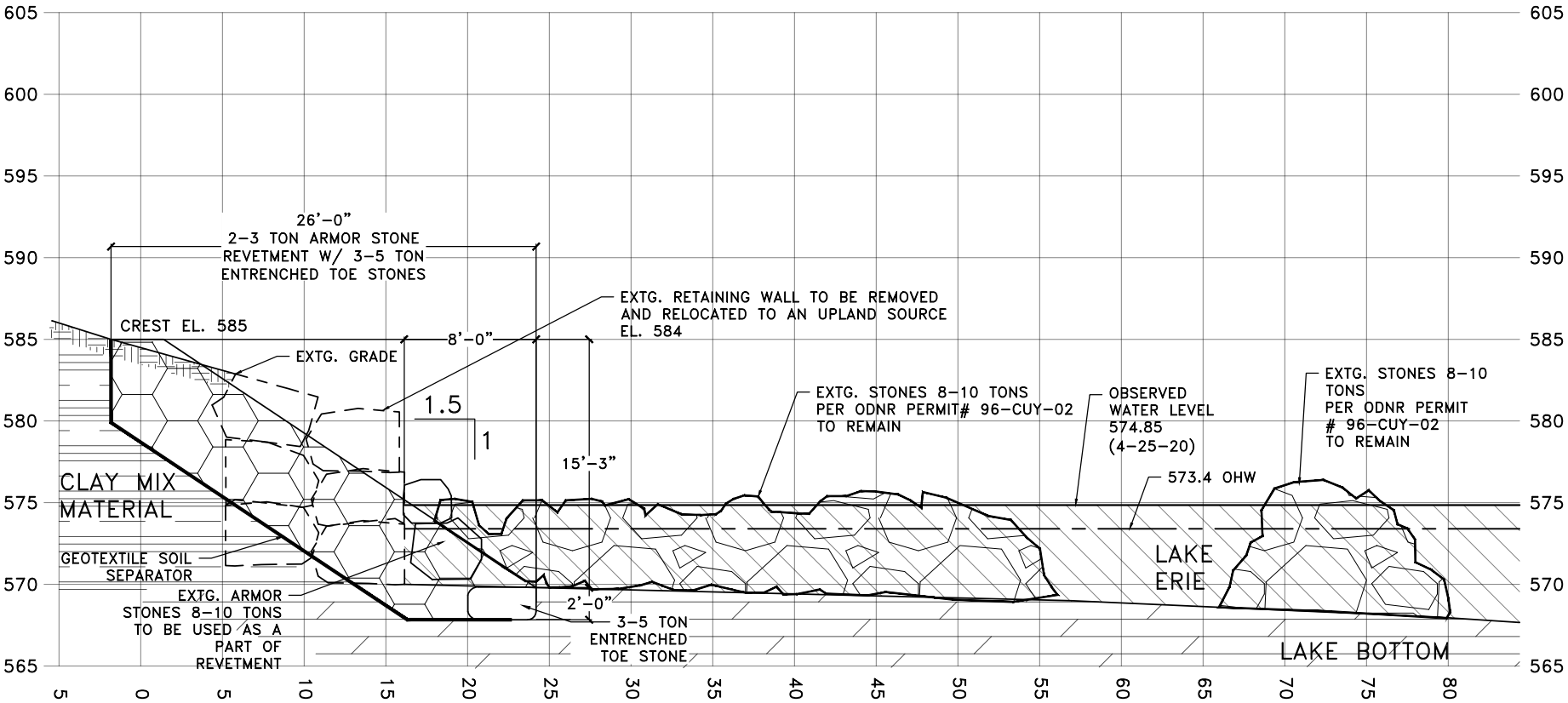

Rocky River Preservation Partners, LLC
D/A Processing No. LRB 2020-00416
Cuyahoga, County, Ohio Quad: Lakewood
Sheet 8 of 8

GRAPHIC SCALE
1" = 10'
0 10' 20'

ENGINEERED TECHNICAL SOLUTIONS
Site Design
Erosion Control
Ecological · Utility
27330 Center Ridge Road
Westlake, Ohio 44145
Phone: (440) 899-6880
www.engineeredtechnicalsolutions.com

REVISIONS:
2-12-20 4-16-20
2-17-20 4-24-20
3-10-20 5-05-20
3-11-20 5-11-20
3-16-20

SCALE: 1"=10'
DATE: 5-12-20
DRAWN BY: R.A.S.
CHECKED BY: C.H.

PROJECT: ROCKY RIVER PRESERVATION PARTNERS LLC
22732 LAKE RD.
LOCATION ROCKY RIVER, OHIO 44116

DWG. TITLE: PROP. SECTION D-D'

DWG. NO.: EN-8
ISSUE: APPL-1